INVITATION TO BID FOR
SELECTION OF A GENERAL CONTRACTOR FOR

PLAZA IMPROVEMENTS AT MACARTHUR TRANSIT VILLAGE

April 22, 2016

INVITATION TO BID FOR
SELECTION OF THE GENERAL CONTRACTOR
PLAZA IMPROVEMENTS AT MACARTHUR TRANSIT VILLAGE

Table of Contents

Part 1: Invitation to Bid (ITB)

Part 2: Instructions to Bidders

Part 3: INTENTIONALLY DELETED

Part 4: Bid Form (Including General Conditions, Bonding Costs & Fees)

Part 5: Exhibits

PART 1:

INVITATION TO BID
FOR
SELECTION OF THE GENERAL CONTRACTOR FOR THE PLAZA IMPROVEMENTS – PLAZA IMPROVEMENTS AT MACARTHUR TRANSIT VILLAGE

NOTICE IS HEREBY GIVEN that sealed Bids to this Invitation to Bid (ITB) will be received until the hour of 10:00 a.m. on **June 16, 2016** (the "Bid Due Date") at the offices of Macarthur Transit Community Partners, LLC, 600 California Street, Suite 900, San Francisco, CA 94108, Attn: Marie Debor, for **the PLAZA IMPROVEMENTS AT MACARTHUR TRANSIT VILLAGE - General Contractor Selection**. Bids will be accepted or rejected by Macarthur Transit Community Partners, LLC ("MTCP"). The Bidders are responsible to ensure their Bids are received at the time and location specified.

The Bid Due Date may be extended by MTCP, or authorized representative, from the above-stated Bid Due Date. Notice of such extension will be published at least once in the same newspaper in which appeared the original advertisement requesting Bids to this ITB. Publication of any extension of the Bid Due Date will occur at least five (5) days prior to the Bid Due Date.

Introductory Background for Plaza Improvements

The Plaza Improvements at Macarthur Transit Village (the "Project") will be developed at the Macarthur BART Station, located at 555 40th Street / Oakland, CA 94609. The Project consists of removal of existing landscaping planters, replacement of the plaza's flooring, installation of new lighting and installation of a secured bicycle station.

The Project has been approved by the San Francisco Bay Area Rapid Transit District (BART). Commitments of Federal funds have been made to the Project and there will be ongoing involvement of BART, the City, and Federal agencies. The project is funded, in part, by an FTA grant, and bidders' attention is directed particularly to Exhibits B-I, which list the FTA provisions and forms.

Scope of Work of the Project

The General Contractor will be responsible for construction of the Project in accordance with the plans and specifications, which consists of the following scope of work including but not limited to:

The following scope of work is shown on the "MacArthur BART Plaza Set" Drawings:

a. Removal of existing landscaping planters, benches, plaza paving and two bus shelters.
b. Relocation of public art to improve the Plaza's circulation.
c. Installation of new paving for entire Plaza and installation of new seat walls and metal benches.
d. Installation of wayfinding signage.
e. New lighting.
f. Installation of new trash receptacles and trash enclosure.
g. Adding new drain inlet and installation of gutters.
h. Installation of security cameras.
i. Installation of a secured bicycle station including e-lock for access control and reinstallation of the existing bike racks and/or lockers.

The Project must be constructed in a manner that maintains pedestrian traffic, access under the Americans with Disabilities Act, and fire, police and ambulance access in and out of the existing BART Station at all times. Contractor shall be responsible for construction staging, pedestrian detours and traffic control per the requirements of BART and in conformance with BART Facility Standards ("BFS"). Phasing plans must be approved by MTCP and BART prior to construction of each phase.

MTCP will be responsible for obtaining the following permits: CALTRANS Encroachment Permit, BART Permit to Enter, City of Oakland P-Job Permit. All other permits such as City street use and obstruction permits shall be obtained by a general contractor or its subcontractors.

Tentative Project Schedule and Alternates

The project schedule is as follows and is subject to adjustments by MTCP:

- Issue ITB ..... April 22, 2016
- Prebid Meeting on Site……May 10, 2016
- Deadline for questions to MTCP on Bid Documents.... May 16, 2016 at 5pm
- Deadline to respond to ITB..... June 16, 2016 at 10am
- Contractor selection..... July 29, 2016
- Contract Execution & Notice To Proceed.. ..... August 9, 2016
- Start of construction..... August 12, 2016
- Completion ..... December 5, 2016

The ITB will contain certain bid additive and deductive alternates and the Bidders must respond on all alternates.

The General Contractor Selection Process

The procurement of the Contractor will follow a sealed bid procurement process. Only timely, priced bids will be considered in the process.

Submittal of Bid

Bidders will submit, on the form provided as Part 4 of this document, their bid (including General Conditions, Bonding Costs and Fee) for the construction of the project and requested unit prices.

Bids will be publicly opened at 600 California Street, Suite 900, San Francisco, at 10:00am on June 16, 2016. The determination of the lowest base bid price will include all factors listed in the Bid Form.

MTCP may reject any and all bids if there is a sound reason.

A firm fixed-price contract award will be made in writing to the lowest responsive and responsible bidder.

The Bid Process

A Pre-Bid Meeting and site tour will be held on **May 10 at 10:00 a.m**. The Pre-Bid Meeting and site tour will convene at the Project site. An inspection tour of the Project site will be conducted as part of the Pre-Bid Meeting. Interested prospective Bidders are requested to confirm their intention to attend by notifying Marie Debor of MTCP at (415) 989-1111 x 7075 prior to the date of the scheduled Pre-Bid Meeting, or by email at mdebor@bridgehousing.com.

Bidders should note that there are limited height clearances within sections of the BART Plaza area, thus Bidders should tour the Project area and note the site conditions.

Bids shall be submitted in accordance with, and subject to, the conditions contained in these Instructions to Bidders and the remainder of this ITB.

ITB documents (**not including the Project Plans**) may be obtained from any one of the following three sources, following the instructions below:

1. From the Macarthur Transit Village website: go to http://macarthurstation.com (use the “Construction” link) for additional information and to download the ITB documents.

2. Via email: send a request via email to Rose Cuyno at rcuyno@bridgehousing.com, providing the name of the firm, name of primary contact person, mailing address, phone number, and the email address to which the ITB documents should be sent.

3. At Area Plan Rooms: the ITB documents, as well as the plans and project manual, will be placed at plan rooms around the San Francisco Bay Area; the list

of plan rooms (including addresses) is also located on the Macarthur Transit Village website (http://macarthurstation.com/; use the “Construction” link).

Documents requested by mail will be packaged and sent postage paid.

Availability of the Project Plans

Complete sets of the Project Plans, consisting of the Construction Document plans and the Project Manual can be ordered from ARC Imaging (the PlanWell Department) 945 Bryant Street San Francisco, CA 94103 (415) 495-2773 or 415-537-2235. Or email SF@e-arc.com reference project name Plaza Improvements at MacArthur Transit Village, #333.

Valid General Contractor’s License

At the time of Contract Award, the Bidder must have a valid California State “A” or “B” Contractor's license, and be in good standing with the Contractors’ State License Board.

CONTRACTOR REGISTRATION

Pursuant to Labor Code Section 1725.5 and Section 1771.1, all Contractors and Subcontractors shall be registered with the DIR in order to be qualified to bid on this Contract or to be listed as a Subcontractor on any Bid submitted subject to the requirements of Section 4104 of the Public Contract Code, or engage in the performance of work in this Contract. An inadvertent error in listing a Subcontractor who is not registered pursuant to State Labor Code Section 1725.5 in a Bid, may be corrected by the Bidder within twenty four (24) hours after the Bid opening if the Subcontractor registers and pays the penalty registration fee described in State Labor Code Section 1725.5. Alternatively, the Subcontractor may be replaced with a registered Subcontractor pursuant to Section 4107 of the Public Contract Code.

Bidders are informed that pursuant to Section 1771.4 of the State Labor Code, this Contract is subject to compliance monitoring and enforcement by the DIR. Furthermore, the Contractor shall post Jobsite notices, as prescribed by regulation. Each Contractor and Subcontractor shall furnish the payroll records specified in Section 1776 of State Labor Code directly to the Labor Commissioner at least monthly and in a format prescribed by the Labor Commissioner.

Prevailing Wage

Contractor and each subcontractor shall pay to all workers employed on the Project not less than the prevailing rate of wages as determined in accordance with the State Labor Code as indicated herein.

State Labor Code

Contractor shall comply with State Labor Code Sections 1774 and 1775. In accordance with said Section 1775, Contractor shall forfeit as a penalty to BART not more than $50

for each calendar day or portion thereof for each worker paid less than the prevailing wage rates stipulated in the invitation to bid for such work or craft in which such worker is employed for any work done under the contract by contractor or by any subcontractor under the contract (in violation of the provisions of the State Labor Code and, in particular, State Labor Code Sections 1770 to 1780, inclusive). The amount of forfeiture shall be determined by the Labor Commissioner based on specified factors pursuant to said Section 1775. In addition to said penalty and pursuant to said Section 1775, the difference between such stipulated prevailing wage rates and the amount paid to each worker for each calendar day or portion thereof for which each worker was paid less than the stipulated prevailing wage rate shall be paid to each worker by the contractor.

Section 1773 of the State Labor Code.

Pursuant to the provisions of Section 1773 of the State Labor Code, BART has obtained the general prevailing rate of wages (which rate includes employer payments for health and welfare, pension, vacation, travel time and subsistence pay as provided for in Section 1773.1 of said Code, apprenticeship or other training programs authorized by Section 3093 of said Code, and similar purposes) applicable to all performance required under the Contract specified, shown, or indicated in the Contract documents including all alterations, amendments or extensions thereto made by change orders (Work) to be done, for straight time, overtime, Saturday, Sunday, and holiday work. The holiday wage rate listed shall be applicable to all holidays recognized in the collective bargaining agreement of the particular craft, classification or type of worker concerned. Copies of the prevailing rates of wages are on file at BART Procurement Department, 300 Lakeside Drive, 17th Floor, Oakland, California, 94612 and will be furnished to the Contractor and other interested parties on request.

The prevailing rates of wages are also available at the following website: **www.dir.ca.gov/dlsr/pwd.** For crafts or classifications not shown on the prevailing wage determinations, Contractor may be required to pay the wage rate of the most closely related craft or classification shown in such determinations for Contract work. The Contractor may contact the Division of Labor Statistics and Research, Prevailing Wage Unit, P.O. Box 420603, San Francisco, CA 94142, (415) 703-4774, for questions concerning job classifications not found in the general prevailing wage determinations.

Posting of Prevailing Wage Rates.

A copy of the prevailing rates of wages shall be posted in a prominent place at each jobsite by the contractor.

Travel and Subsistence Payments.

The contractor shall make travel and subsistence payments to each worker needed to execute the work in accordance with the requirements in Section 1773.8 of the State Labor Code.

Payroll Records.

(a) The contractor shall comply with the provisions of State Labor Code Sections 1776 and 1812, and shall be responsible for compliance by its subcontractors. The penalties specified in subdivision (f) of State Labor Code Section 1776 for noncompliance may be deducted from any monies due or which may become due to contractor.

(b) A certified copy of payroll records provided in State Labor Code Section 1776 shall be furnished to BART each week, and shall be provided within seven (7) days after regular payment date of the payroll period. Failure to comply with these requirements may cause suspension of progress payments during period of noncompliance or may delay final payment.

(c) Within seven (7) Days following Notice to Proceed (NTP), the Contractor shall register at BART's designated website for electronic submittal of Certified Payroll Records. BART's Office of Civil Rights will notify the Contractor and provide all necessary information related to the BART's designated website for electronic submittal of Certified Payroll Records. Each week, the Contractor and its Subcontractors shall submit their respective Certified Payroll Records electronically to BART's designated website in accordance with the requirements of the website. These records shall be provided within seven (7) Days after the regular payment date of the payroll period. Failure to comply with these requirements may cause a suspension of progress payments during the period of noncompliance or may delay final payment. Contractor shall include in its Subcontracts, and require its Subcontractors of every tier to include in their respective Subcontracts, provisions incorporating the requirements of this section for electronic submittal of Certified Payroll Records.

Certified Payroll Records Submittal to State.

Within 30 Days following Award of the Contract, the Contractor and its Subcontractors shall register with the California Department of Industrial Relations at **https://apps.dir.ca.gov/eCPR/DAS/altlogin** in order to enroll in the electronic system for monthly submittal of Certified Payroll Records. Thereafter, each month the Contractor and its Subcontractors shall submit electronically a copy of their respective Certified Payroll Records to DIR. Contractor shall include in its Subcontracts, and require its Subcontractors of every tier to include in their respective Subcontracts, provisions incorporating the requirements of this section for Certified Payroll Records submittal to the State. Failure to comply with these requirements may cause a suspension of progress payments during the period of noncompliance or may delay final payment.

Reimbursement

MTCP will not reimburse Contractor for any costs involved in the preparation and submission of responses to this ITB. Furthermore, this ITB does not obligate MTCP to accept or contract for any expressed or implied services.

Insurance and Bonds

The selected Contractor will be required to submit payment and performance bonds upon execution of the Contract each in the amount of 100 percent of the contract price. Bidders will be required to demonstrate their capacity to obtain the required bonds. Bidders shall attach a notarized statement from an admitted surety insurer (approved by the California Department of Insurance) authorized to issue bonds in the State of California that states:

- Bidder's current bonding capacity is sufficient for the Project and referenced payment and performance bonds; and
- Bidder's current available bonding capacity.

Bidders shall provide evidence of capability to provide insurance as required per **Exhibit J**.

Subcontractor Payments. The Contractor shall promptly pay any and all Subcontractors by an instrument that guarantees availability of funds immediately upon deposit of said instrument. The Contractor shall include in its monthly invoice submission to MTCP, amounts to pay for all Subcontractors' acceptable invoices, no later than thirty (30) Days after receipt of such invoices. Unless otherwise approved in writing by the District, the Contractor shall, within seven (7) Days after receipt of the payment made by MTCP, pay to each of its immediate Subcontractors for satisfactory performance of its contract, the amounts to which they are entitled, after deducting any prior payments and any amount due and payable to the Contractor by those Subcontractors. Any delay or postponement of such payment may take place only for good cause and with the District's prior written approval. If the Contractor determines the work of the Subcontractors to be unsatisfactory, the Contractor must immediately notify in writing the District (with a separate notice to the District's Office of Civil Rights if the Subcontractor is a DBE) and state the reasons. Failure by the Contractor to comply with this requirement will be construed to be a breach of Contract and may be subject to sanctions.

The District shall make incremental inspection of portions of the work and, upon approval of the Contractor's work at various stages of the Contract, promptly release retainage attributable to the work that has been approved. Within thirty (30) Days after the District has made such payment, the Contractor shall release to any Subcontractor who has satisfactorily completed work covered by the District's inspection and approval the retainage owed to the Subcontractor for such work. The District's incremental inspection, approval, or release of a portion of the retainage under this Section shall not constitute Acceptance.

Where there has been an incremental inspection and approval pursuant to this Section, a Subcontractor's work is satisfactorily completed when the Contractor certifies to the District that all the tasks called for in the Subcontract related to the work covered by the inspection and approval have been accomplished and that the Subcontractor's retention may now be released.

The Contractor shall maintain records to verify the release of such retainage to the affected Subcontractors. Such records shall show the name and business address of such Subcontractors and the total dollar amount actually paid, including the retainage, and the date of payment. A monthly report based on these records and certified to be correct by the Contractor shall be submitted with the monthly invoice. The Contractor's certification shall contain a formula used to calculate the amount paid to the Subcontractor. No invoice will be approved for payment unless the current report has been furnished. **Subcontractor Payment Tracking System Reporting Requirements**. Prior to the submittal of the first monthly invoice for work performed on this Contract, the Contractor shall comply with the District's Subcontractor Payment Tracking System requirements by registering this Contract on the District's website which can be accessed at **https://suppliers.bart.gov.** The Contractor shall provide all specified information at such website about itself and all first-tier Subcontractors whose Subcontracts exceed $5,000 as well as all first-tier DBEs regardless of Subcontract dollar value.

Information required to be provided includes, but is not limited to, specified contact person, Subcontractor invoices received, Subcontractor Taxpayer Identification Number (TIN), payment information for both the Contractor and its Subcontractors, as well as the total dollar amount of each first-tier Subcontract that exceeds $5,000 and each first-tier DBE Subcontract regardless of Subcontract dollar value, the total dollar amount actually paid the first-tier Subcontractor, the date of payment, and such other information as specified in the District's website.

Contractor shall update the above information monthly, including similar information about all applicable Subcontractors added to the Contract during the period of the Contract. The monthly update shall be prepared by the Contractor as specified in the District's website, and submitted electronically at **https://suppliers.bart.gov.** Such report shall be certified to be correct by the Contractor.

Failure to comply with these reporting requirements may be grounds for withholding payments due the Contractor during the period of noncompliance.

Additional Requirements Related to the Project

All work shall be performed in accordance with the laws of the State of California. The general contractor and their subcontractors are required to abide by the Project's Project Labor Agreement, pay prevailing wages and submit certified payroll with each progress payment request.

Any negotiated costs (changes, claims) must comply with Federal Cost Principles, 48 CFR Part 31.

PART 2:

INSTRUCTIONS TO BIDDERS FOR SELECTION OF THE GENERAL CONTRACTOR FOR THE PLAZA IMPROVEMENTS - PLAZA COMPONENT AT MACARTHUR TRANSIT VILLAGE

1. Obtaining ITB documents

ITB documents shall be obtained as described in Part 1, the Invitation to Bid.

2. Related Information Available to Bidders

Additional information, if any, not included in the ITB documents will be available for Bidder's inspection at the offices of Macarthur Transit Community Partners, LLC at the address shown in the Invitation to Bid.

3. Examination of Project Site and Project Plans

The Bidder shall examine carefully the Project Site and the Project Plans, as defined and identified in the Invitation to Bid. Actual on-site dimensions and conditions may not be exactly as indicated in the Project Plans. Bidders shall verify all dimensions critical to their Bids. By submitting a Bid, the Bidder represents that Bidder has investigated and accepts the conditions to be encountered and the character, quality, and scope of work to be performed, materials to be furnished, and the requirements of the Project Plans and the ITB.

4. Explanations

Prospective Bidders who wish explanations or clarifications of the Project Plans, or of these Instructions to Bidders, must submit their inquiries in writing to MTCP. Such inquiries shall identify the Project name, and shall be directed to Marie Debor at MTCP Phone: (415) 989-1111 x7075; Email: info@macarthurtransit.com. Any response that MTCP may choose to make will be by a written Addendum to the ITB documents, which will be mailed or sent electronically to all persons who have requested ITB documents as well as posted on MTCP's website. MTCP will not be bound by any explanation, clarification, or interpretation, oral or written, by whoever made, that is not incorporated into an Addendum to the ITB. The receipt of Addenda by the Bidder shall be acknowledged in the form of **Exhibit A**. No response will be made to inquiries received by the MTCP less than five (5) calendar days before the scheduled Bid opening.

4.A. Public Disclosure:

The project is funded in part with federal transit funds, and any documents submitted to MTCP in response to this ITB shall be open to public inspection

and copying. In addition, Bidders should specifically identify any portion of their Bids which they deem to contain confidential, proprietary information or trade secrets and will be required to prove, upon request, justification and defense of the Bidder's position that such material should not be disclosed by MTCP under the California Public Records Act.

5. Protests

5.A Address

All protests must be in writing, stating the name and address of protestor, a contact person, Project name, and shall specify in detail the grounds of the protest and the facts supporting the protest.

All protests must be addressed as follows:

By HAND DELVERY/U.S. Mail:
Marie Debor
MacArthur Transit Community Partners, LLC
600 California Street, Suite 900
San Francisco, CA 94108

Protests not properly addressed to MTCP will not be considered.

The protest provisions of Federal Transit Administration (FTA) Circular 4220.1F may be downloaded from the FTA website:

http://www.fta.dot.gov/laws/circulars/leg_reg_4063.html

Responses will be reviewed and a Notice of Award will be issued by MTCP in accordance with the protest provisions of FTA Circular 4220.1F.

5.B Pre-Bid Protests

Pre-Bid Protests are protests based upon the content of the solicitation documents. Five (5) copies of pre-Response protests must be received by MTCP no later than five **(5)** calendar days prior to the Bid Due Date. A written decision specifying the grounds for sustaining all or part of or denying the protest will be transmitted to the protestor prior to the Bid Due Date in a manner than provides verification of receipt prior to the due of Bids. If the protest is sustained, the Bid Due Date may be postponed and an Addendum issued to the solicitation documents or, at the sole discretion of MTCP, the advertisement may be canceled. If the protest is denied, Bids will be received and opened on the scheduled date unless a protest is filed with FTA. See Paragraph 5.D below. The above procedure applies to the Bid phase of this Invitation to Bid.

5.C Protests of the Recommended Award

All Bidders will be notified of the recommended award pursuant to this ITB. This notice will be transmitted to the Bidder at the address contained in its Bid in a manner that provides verification of receipt. Any Bidder may protest the recommended award on any ground not specified in Paragraph 5.B above. Five (5) copies of a full and complete written statement specifying in detail the grounds of the protest and the facts supporting the protest must be received by MTCP at the appropriate address in Paragraph 5.A above no later than seven (7) calendar days after the date such notification is received. A written decision stating the grounds for allowing or denying the protest will be transmitted to the protestor and the Bidder recommended for Award in a manner that provides verification of receipt, prior to issuing the Notice of Award. Such decision shall be final.

5.D FTA Review

A Bidder or prospective Bidder who submits a protest may request FTA review of MTCP's action on a protest subject to the following requirements: FTA review is limited to the alleged failure of the MTCP to have written protest procedures, the alleged failure of the MTCP to follow those procedures, the alleged failure of MTCP to review a protest, or the alleged violation of Federal law or regulation. An appeal to FTA must be received by FTA's Regional Administrator for Region IX in San Francisco within five (5) working days after MTCP's final Decision is received by the Bidder or prospective Bidder or five (5) working days after the Bidder or prospective Bidder learned or should have learned of MTCP's final decision or other basis of appeal to FTA. A copy of the appeal filed with the FTA shall be submitted to MTCP.

6. Preparation of Responses –

All costs for developing, submitting and presenting Bids are the responsibility of the Bidder. Bidders shall complete the ITB and accompanying documents as indicated thereon and in accordance with the following:

6.A Response Form

INTENTIONALLY DELETED

6.A.1 Addenda

Receipt of all Addenda must be acknowledged. Bidders shall complete and sign the "Acknowledgement of Receipt of Addenda to the ITB" provided in Part 5 as **Exhibit A**.

6.A.2 Signing of Bid

INTENTIONALLY DELETED

6.B Non-Collusion Declaration

Bidders shall complete and sign the Non-Collusion Declaration provided in Part 5 as **Exhibit C**.

6.C Fair Employment Practices Certification

Bidders shall complete and sign the Fair Employment Practices Certification provided in Part 5 as **Exhibit D**.

6.D Debarment Certification

Bidders shall complete and sign the Certification Regarding Debarment contained in the ITB as **Exhibit E** and submit it with the Bid.

6.E Lobbying Certification

Bidders shall complete and sign the Certification Regarding Lobbying contained in the ITB as **Exhibit F** and submit it with their Bid.

6.F Buy America Certification

Bidders shall complete and sign the Buy America Certification contained in the ITB as **Exhibit G** and submit it with their Bid. Note: Any contract resulting from this RFQ is subject to the Buy America requirements of 49 USC 5323(j), and applicable regulations in 49 CFR Part 661 as may be amended from time to time. As any contract resulting from this RFQ is expected to involve fees in excess of $100,000, the Bidder (and any subcontractor whose fees are expected to be in excess of $100,000) shall complete and sign the Buy America Certificate included as **Exhibit G.** In accordance with 49 CFR Part 661.13, failure of the Bidder to appropriately execute the Buy America Certification will make the Bid non-responsive.

7-12 INTENTIONALLY DELETED

13. Submittal of Bid

13.A Bid Form

The Bid Form, when executed and submitted by the Bidder, shall constitute the Bidder's commitment to provide its services, at a fixed amount (for General Conditions) for a fixed percentage (General Contractor's Fee), and for the CSI Division title price listed on the Bid Form (excluding General

Conditions and Fee). Bids shall include a schedule of values, itemized by specification section. Bids not presented on such Form will be disregarded.

13.A.1 Signing of Bid

If the Bidder is a corporation, the Bid shall be signed by an authorized officer of the corporation; if the Bidder is a partnership, the Bid shall be signed by a general partner having the power to bind the partnership contractually; if the Bidder is a joint venture, the Bid shall be signed by all of the joint venturers; or if the Bid is signed by an agent for the Bidder, other than as provided above, a power of attorney shall be submitted with the Bid. Bidders submitting a Bid as a joint venture must have an executed joint venture agreement as of the Bid Date and a copy of the executed joint venture agreement shall be attached to the Statement of Qualifications and Business References for Construction. A Bid not properly signed may be rejected as irregular and unauthorized. Bidder shall submit evidence of the authority of the person signing the Bid along with the Bid.

13.A.2 Bid Completion Instructions

Bidders shall observe the following instructions in completing the Bid Form; FAILURE TO DO SO MAY RESULT IN REJECTION OF THE BID:

13.A.2.a Modification

The Bidder shall not delete, modify, or supplement the printed matter on the Bid Form or make substitutions therefor.

13.A.2.b Completion

The Bid Form and the other accompanying forms shall be completed in ink and printed or typed.

13.A.2.c Information

Identifying information, such as the Bidders name, address, and State of incorporation, shall be entered in the spaces provided.

13.A.2.d Corrections

Corrections shall be initialed by the person who signs the Bid.

13.B Designation of Subcontractors and Disadvantaged Business Enterprise (DBE) Program

13.B.1 Designation of Subcontractors

Bidders shall comply with the requirements for designating Subcontractors by completing Part 1 of the "Designation of Subcontractors and DBEs form" (**Exhibit H**) and submitting the completed form with the Bid.

In order for a DBE with a principal place of business outside the four counties of Alameda, Contra Costa, San Francisco and San Mateo (BART Market Area), to be counted towards meeting the DBE goal, such DBE shall complete and sign the Non Residence Certification (Exhibit I) certifying that the DBE has done business or attempted to do business in the BART Market Area within two years prior to the Contract advertisement date. Such Certification shall be completed and signed under penalty of perjury. The Non Residence Certification may be submitted with the Bid but shall be submitted no later than 2:00 p.m. on Friday of the week following the date of Bid opening to MTCP.

13.B.2 Disadvantaged Business Enterprise (DBE) Program The San Francisco Bay Area Rapid Transit District (BART or the District) is committed to carrying out all of the Disadvantaged Business Enterprise (DBE) requirements of 49 CFR Part 26 as amended from time to time. The procedures contained in the District's DBE Program will assure that all Contracts and procurements are administered without discrimination on the basis of race, color, sex, or national origin, and that DBEs have an equal opportunity to compete for and participate in the performance of all agreements, Contracts and Subcontracts awarded by the District.

It is the policy of the District to ensure nondiscrimination on the basis of race, color, sex or national origin in the award and administration of Federally funded Contracts. It is the intention of the District to create a level playing field on which DBEs can compete fairly for agreements, Contracts and Subcontracts, including but not limited to construction, procurement and Invitation-For-Bids Contracts, professional and technical services agreements, and purchase orders.

13.B.2.a Definitions. For purposes of this Contract only:

Disadvantaged Business Enterprise: A Disadvantaged Business Enterprise (DBE) is a for-profit, Small Business Concern: 1) that is at least fifty-one percent (51%) owned by one or more individuals who are socially and economically disadvantaged or, in the case of a corporation, in which at least fifty-one percent (51%) of the stock is owned by one or more socially and economically disadvantaged

individuals; and 2) whose management and daily business operations are controlled by one or more of the socially and economically disadvantaged individuals who own it.

Small Business Concern: A Small Business Concern is: 1) an existing small business as defined by Section 3 of the Small Business Act and the Small Business Administration regulations implementing it (13 CFR Part 121), and 2) whose average annual gross receipts (including those of its affiliates) for the previous three fiscal years does not exceed $22.41 million (or as adjusted for inflation by the Secretary of DOT) pursuant to 49 CFR Section 26.65(b).

Socially and Economically Disadvantaged Individuals: There is an assumption that an individual is both socially and economically disadvantaged if he or she is a citizen or lawfully admitted permanent resident of the United States and is:

1. Black American (including persons having origins in any of the Black racial groups of Africa);

2. Hispanic American (including persons of Central or South American, Cuban, Dominican, Mexican, Puerto Rican, or other Spanish or Portuguese culture or origin, regardless of race);

3. Native American; (including persons who are Aleuts, American Indians, Eskimos, or Native Hawaiians);

4. Asian-Pacific American (including persons whose origins are from Brunei, Burma (Myanmar), Cambodia (Kampuchea), China, the Commonwealth of the Northern Marianas Islands, the Federated States of Micronesia, Fiji, Guam, Hong Kong, Indonesia, Japan, Juvalu, Kiribati, Korea, Laos, Macao, Malaysia, Nauru, the Philippines, Samoa, Taiwan, Thailand, Tonga, the U.S. Trust Territories of the Pacific Islands (Republic of Palau) or Vietnam);

5. Subcontinent Asian American (including persons whose origins are from Bangladesh, Bhutan, India, the Maldives

Islands, Nepal, Pakistan, or Sri Lanka);

6. A Woman; or

7. A member of any additional group that is designated as socially and economically disadvantaged by the Small Business Administration.

If there is a conflict between the above three definitions and the definitions of the California Unified Certification Program (CUCP) certification documents, the definitions in this Section 13.B.2.a shall prevail. Bidders may need to verify any DBE firm's continued eligibility under the DBE regulations, 49 CFR Part 26.

13.B.2.b DBE Participation Goal. The Disadvantaged Business Enterprise (DBE) participation goal for this Contract is twenty (20%), excluding any Allowance and Option Bid Items, if applicable.

13.B.2.c Intentionally omitted.

13.B.2.d DBE Participation.

DBE Participation includes contracts (other than employee contracts) between DBEs and the Contractor for any goods or services specifically required for the completion of the Work under this Contract. Only that portion of the work that is actually performed by a DBE's own forces or by its DBE Subcontractors and Suppliers will be recognized for purposes of counting DBE participation. The cost of supplies and materials obtained by the DBE or equipment leased (except from the prime Contractor or its affiliate) may also be counted. A DBE may participate as a first-tier Subcontractor, joint venture partner with a prime or first-tier Subcontractor, vendor of material or supplies incorporated or expended in the Work, or a Supplier of other services such as shipping, transportation, testing, equipment rental, insurance services and other support services necessary to fulfill the requirements of the Contract, provided that such vendor or Supplier contracts directly with the Contractor. The Bidder assumes responsibility for accurately identifying the first-tier status of DBE firms proposed in the Designation of Subcontractors DBEs Form.

Bidders are encouraged to explore joint venturing possibilities with DBEs for the work to be performed. A DBE joint venture partner must be responsible for a clearly defined portion of the work to be

performed in addition to satisfying requirements for ownership and control. Only that portion of the work that is actually performed by the DBE's own forces or by its DBE Subcontractors and Subsuppliers can be recognized for purposes of counting DBE participation towards the DBE goal. The DBE joint venture must submit information for determining joint venture eligibility.

A DBE must perform a commercially useful function, i.e. must be responsible for the execution of a distinct element of work and must carry out its responsibility by actually performing, managing and supervising the Work.

Only those DBEs that are either located in the four counties of Alameda, Contra Costa, San Francisco and San Mateo (BART Market Area) or that have done business or attempted to do business in the BART Market Area within two years prior to the Contract advertisement date and that have been certified prior to the Bid opening date and which are listed in the Designation of Subcontractors, DBEs Form (Exhibit H) will be counted towards meeting the DBE goal. Such DBE participation will be counted as follows:

1. The value of the work actually performed by the DBE. If the Bid is submitted by a DBE prime Contractor, only the portion of the work that is actually performed by the DBE prime Contractor will be counted. If the Bidder is a joint venture, only the portion of the total dollar value of the Contract equal to the distinct, clearly defined portion of the work of the Contract that the DBE performs with its own forces or which are performed by its DBE Subcontractors and Suppliers will be counted. If the work is not clearly delineated between the DBE and the joint venture partner, only the portion of the work equal to the DBE's percentage ownership interest in the joint venture will be counted.

2. The dollar value of all DBE contracts for work or services under the Contract. When a DBE subcontracts part of the work of its Contract to another firm, the value of the subcontracted work may be counted toward the DBE goal only if the DBE Subcontractor is itself a DBE. Work that a

DBE subcontracts to a non-DBE firm does not count toward the DBE goal.

3. The dollar value of material or supplies purchased from a DBE manufacturer of such material or supplies.

4. Sixty percent (60%) of the dollar value of material or supplies purchased from a DBE regular dealer. A regular dealer is a firm that owns, operates, or maintains a store, warehouse or other establishment in which the material or supplies required for the performance of the Contract are bought, kept in stock, and regularly sold to the public in the usual course of business. To be a regular dealer, the firm must engage in, as its principal business, and in its own name, the purchase and sale of the products in question. A regular dealer in such bulk items as steel, cement, stone, gravel, and petroleum products need not keep such products in stock, if it owns or operates distribution equipment. Brokers and packagers shall not be regarded as manufacturers or regular dealers.

5. Fees or commissions charged by a DBE broker or manufacturer's representative for:

a. providing a bona fide service and assistance in the procurement of essential personnel, facilities, equipment, materials or supplies required for performance of the Contract;

b. delivering of materials and supplies required on a Jobsite; or

c. providing any bonds or insurance specifically required for the performance of the Contract. Such fees or commissions will be counted, provided that they are reasonable and not excessive as compared with fees or commissions customarily allowed for similar services. Where a DBE provides training of essential personnel, the Office of Civil Rights will determine, based on industry practices, whether to credit such participation at the full dollar value of the Subcontract or at a portion thereof representing the

fee or commission customarily allowed for similar services.

6. Participation of DBE trucking companies meeting the following requirements:

a. DBE must be responsible for the management and supervision of the entire trucking operation for which it is responsible on a particular Contract.

b. DBE must itself own and operate at least one fully licensed, insured, and operational truck used on the Contract.

c. DBE receives credit for the total value of the transportation services it provides on the Contract using trucks it owns, insures, and operates using drivers it employs.

d. DBE may lease trucks from another DBE firm including an owner- operator, who is certified as a DBE. The DBE who leases trucks from another DBE receives credit for the total value of the transportation services the lessee DBE provides on the Contract.

e. DBE may also lease trucks from a non-DBE firm including from an owner- operator. The DBE who leases trucks from a non-DBE or is entitled to credit only for the fee or commission it receives as a result of the lease arrangement. The DBE does not receive credit for the total value of the transportation services provided by the lessee, since these services are not provided by the DBE.

f. For purposes of this Section 13.B.2.d.6, a lease must indicate that the DBE has exclusive use of and control over the truck. This does not preclude the leased truck from working for others during the term of the lease with the consent of the DBE, so long as the lease gives the DBE absolute priority for use of

the leased truck. Leased trucks must display the name and identification number of the DBE.

7. DBE achievement will not be counted toward the DBE goal until the DBE firms have been paid.

13.B.2.e DBE Information.

1. The following information shall be submitted with the Bid:

a. A completed Designation of Subcontractors DBEs Form (exhibit H), with the names of DBEs to be used, a description of the work, services or supplies provided by each, and the dollar value of each DBE transaction.

2. The following applicable information may be submitted with the Bid, but shall be submitted no later than 2:00 p.m. on Friday of the week following the date of Bid opening to the District's Office of Civil Rights, at 16th Floor, 300 Lakeside Drive, Oakland, CA 94612:

a. For Bidders who's Designation of Subcontractors, DBEs Form indicates that the DBE goal has not been met with DBEs certified under the CUCP, a written report with supporting documentation covering all good faith efforts listed in Section 13.B.2.f made by the Bidder prior to Bid submission to meet the goal.

3. The District may request additional information following its review, which information shall be submitted by the Bidder within five (5) Working Days of the telephone or facsimile request.

4. As to any DBEs listed on the Designation of Subcontractors, DBEs Form, Bidder is required to have obtained oral or written quotes for the work or services in the amounts specified from the DBEs listed, prior to submission of the Bid. The District may contact DBEs to verify quotes. A Bidder's failure to obtain such oral or written quotes may result in a Bid being deemed non-responsive.

5. **BIDDERS ARE WARNED** that failure to comply with the requirements of 13.B.2.e 1,2,3 or 4 above, within the

times prescribed, will result in a Bid being deemed non-responsive, unless a later time is authorized by the District.

6. **BIDDERS ARE WARNED THAT ONLY FIRMS CERTIFIED AS DBES PRIOR TO THE DEADLINE TO RESPOND TO ITB DATE CAN BE COUNTED TOWARD MEETING THE DBE GOAL**. For the Bidders' convenience, the CUCP Uniform Certification Application Form package, for use by each business not currently certified under the CUCP as a DBE can be downloaded from the District's website, www.bart.gov, or obtained from the District's Office of Civil Rights at 16th Floor, 300 Lakeside Drive, Oakland, CA 94612, telephone number (510) 464-6100. Businesses not meeting the definitions set out in Section 13.B.2.a and the criteria for participation in Section 13.B.2.d will not be certified as DBEs.

13.B.2.f Good Faith Efforts To Meet DBE Goal.

Good faith efforts are those that, given all relevant circumstances, a Bidder actively and aggressively seeking to meet the DBE goal would make. The Bidder must show that it took all necessary and reasonable steps to achieve the DBE goal which, by their scope intensity, and appropriateness to the objective, could reasonably be expected to obtain sufficient DBE participation. Only those efforts made prior to Bid opening will be considered for evaluation of good faith efforts. Each Bidder is strongly encouraged to attend the pre-Bid meeting and Matchmaking Session(s) listed herein. The meeting(s) is(are) intended to cover the DBE Program requirements for this Contract, to inform DBEs of Subcontracting opportunities, and to provide an opportunity for Bidders to meet and/or solicit Subcontractors. Regardless of whether a Bidder attends the meetings, the Bidder assumes responsibility for being informed and complying with the DBE requirements.

In determining whether good faith efforts have been made, the District will consider the quality, quantity, and intensity of the different kinds of efforts that the Bidder has made. Specifically, and without limitation, the District will consider, on the basis of documentation timely submitted by the Bidder, whether the actions listed below have been taken. Only steps taken by the Bidder (as opposed to those taken on the Bidder's behalf by a third party) will be considered. The steps listed below are reflective of good faith efforts taken by a Bidder actively and aggressively seeking to meet

the DBE goal. The District considers each of the listed steps particularly significant in evaluating a Bidder's good faith efforts.

1. Pre-Bid Meeting and Matchmaking Session(s). A Bidder's failure to attend the pre-Bid meeting and/or Matchmaking Session(s) will be considered a significant factor and may result in an adverse determination by the District in assessing good faith efforts.

2. Selecting Portions Of The Work To Be Performed By DBEs. In order to increase the likelihood that the DBE goal will be achieved, Bidder shall select portions of the work that DBEs can perform. This includes, where appropriate, breaking out contract work items into economically feasible units to facilitate DBE participation, even when the Contractor might otherwise prefer to perform these work items with its own forces.

3. Advertisements. No fewer than twenty one (21) Days prior to the Deadline to respond to ITB date, a Bidder shall have in place at least three (3) advertisements soliciting sub-bids on this Contract from DBEs that are either located in the BART Market Area or that have done business or attempted to do business in the BART Market Area within two years prior to the Contract advertisement date. If, due to the bidding schedule, twenty one (21) Days are not available, advertisement for a shorter reasonable period of time is acceptable. Such advertisements shall refer only to bids for the District's Contract and shall specify the categories of Work for which Subcontracting opportunities exist. The advertisements shall be placed in three (3) or more paid daily or weekly minority and/or women trade association newspapers, other minority and/or women trade focus publications or media as well as publications and media reasonably expected to reach DBE Firms. The advertisements shall be in publications or media that can be reasonably be expected to reach DBEs that are likely to bid on this Contract.

4. Email: In addition to advertisements, no fewer than twenty one (21) Days prior to the date of Bid opening, a Bidder shall email notices to DBEs inviting them to bid, with at least the same information included in the above advertisements, namely, categories of work that can be subcontracted or equipment, material, or supplies to be

purchased, the date of Bid opening, a contact person, email, and telephone number. DBEs shall be selected from the CUCP database and shall be widespread in categories of work, including, Subcontractors, suppliers, trucking companies, and others. At least two (2) additional email transmissions shall be sent by the Bidder prior to the date of Bid opening.

5. Letters.

   a. A Bidder shall solicit sub-bids on this Contract by mailing registered or certified letters to DBEs that are either located in the BART Market Area or that have done business or attempted to do business in the BART Market Area within two years prior to the Contract advertisement date that are qualified to perform those categories of work which the Bidder can Subcontract. Solicitation letters shall be mailed no fewer than twenty one (21) Days prior to the Bid opening date. If, due to the bidding schedule established by the District, twenty one (21) Days are not available, a mailing providing a shorter reasonable period of notice is acceptable. The letters shall be mailed to no fewer than ten (10) appropriate certified DBEs for each category of work sought to be subcontracted, or to a number of such DBEs equal to 100% of the DBEs listed for each such category of work in the CUCP database that are either located in the BART Market Area or that have done business or attempted to do business in the BART Market Area, within two years prior to the Contract advertisement date, which may be found at the following website: www.bart.gov. As used herein, "appropriate" refers to those firms performing work related to the scope of the Work of this Contract.

   b. The letters to certified DBE firms shall:

      (i) Clearly identify portions of the Work which the Bidder is willing to have performed by Subcontractors, and offer to break down any portion of the Work

into economically feasible units in order to facilitate DBE participation.

(ii) Offer assistance with regard to bonding requirements and insurance requirements, where applicable, and/or financing (e.g. lines of credit), specifying the type of assistance that the Bidder is offering. Assistance may include, but is not limited to:

(1) Contacting bonding and/or insurance companies on behalf of DBEs.

(2) Arranging with sureties incremental or phased bonding for the DBEs.

(3) Paying for the cost of the bond or insurance.

(4) Waiving bonding or insurance requirements.

(5) Referring DBEs to Business Development Centers or other resource agencies who may assist DBEs in obtaining bonding, insurance, or lines of credit.

(iii) Offer to make plans and specifications available to DBEs at reasonable hours for viewing, copying, or borrowing and shall provide a list containing the location of plan rooms.

(iv) Negotiate in good faith with interested DBEs.

c. Each Bidder shall use the CUCP database, as the source of DBEs for solicitation. Bidders may review the names and addresses of firms certified

under the CUCP on the following website: www.bart.gov.

In addition to the mandatory requirement to use the CUCP database each Bidder is encouraged to use the services of minority, women, and small business community organizations, and/or contractors' groups, in order to identify certified DBEs for work under the Contract. A listing of such organizations is available from the District's Office of Civil Rights.

6. Follow-Up of Initial Solicitations. A Bidder shall follow-up initial solicitations of DBE sub-bidders no later than ten (10) Days after the mailing of the initial solicitation letters. The follow-up shall be conducted by someone familiar with the Contract and shall be conducted with all previously contacted certified DBEs in all work categories that the Contractor is willing to subcontract. If, due to the bidding schedule established by the District, ten (10) Days are not available between the mailing of the solicitations and the date of Bid opening, follow-up of DBE sub-bidders within a shorter period of time is allowed. Such follow-up activity shall be documented by telephone logs or other written documentation which shall provide, at a minimum, the following information:

   a. Type of contact (e.g. telephone call, visit, letter).

   b. Name and position of person who made contact on behalf of the Bidder.

   c. Name and address of firm contacted.

   d. Name and position of person contacted, telephone number, and date of contact.

   e. The response from the firm contacted with regard to its interest in submitting a sub-bid.

   f. Follow-up, if any, to the assistance offered in the initial solicitation letter with regard to breakdown of work into economically feasible units, bonding,

insurance, lines of credit, and plans and specifications.

g. For each DBE contacted who declined to bid, the reason provided by the DBE for declining to bid. If the reason cited relates to bonding, financing or insurance, the Bidder must provide documentation describing in detail the assistance offered by the Bidder to the DBE.

7. Responses from Interested DBEs. Each Bidder shall submit records of responses, proposals and/or bids received from DBEs, which shall include, at a minimum, the following information:

a. Names, positions, addresses and telephone numbers of all DBEs that responded to the Bidder's solicitation.

b. All responses (including requests for assistance or information), proposals, or bids received, and whether such responses, proposals or bids were in writing or verbal. In the case of written responses, copies of such responses.

c. The date each response was received by the Bidder.

8. Bidder's Evaluation of Interested DBEs. Each Bidder shall submit documentation of its evaluation of proposals or bids received from DBEs. For each DBE that responded to the Bidder's solicitation, the Bidder shall document the following:

a. A summary of all communications and negotiations, if any, between the Bidder and the DBE.

b. A description of specific assistance agreed to be provided by the Bidder to the DBE with regard to bonding, insurance, obtaining plans and specifications, or assistance to DBEs in obtaining necessary equipment, supplies, materials, or related assistance or services.

c. If the bid was rejected, the reasons for rejection. The District may deem that a Bidder has not made good faith efforts if DBE bids have been rejected without adequate reason. Price alone will not be

considered to be an adequate reason for rejection unless each of the following factors has been met on the basis of documentation submitted.

(i) The Bidder contacted the DBE sub-bidder and ascertained that the DBE fully understands the scope of the work and has not included work beyond the scope and/or overhead items already covered by the District, e.g. insurance for general liability and workers' compensation if the Contract is covered under the District's Owner-Controlled Insurance Program.

(ii) In view of all relevant circumstances, the DBE sub-bid rejected for price alone was significantly higher than other sub-bids received for the Work.

d. If the bid was rejected for any reason, a copy of the DBEs bid along with copies of all bids received by non-DBE firms for the same or similar scope of work.

e. If a DBE was rejected as unqualified, a description of the investigation conducted by the Bidder prior to reaching the conclusion that the DBE was unqualified.

9. Other Efforts. Each Bidder shall include in the report submitted under Section 13.B.2.e any other efforts made to meet the DBE goal that are not listed above.

13.B.2.g <u>Good Faith Efforts Assessment</u>. In addition to determining whether a Bidder has taken the actions described in Section 13.B.2.f, the District will consider the following factors in determining whether good faith efforts have been met:

1. Only firms certified prior to the Deadline to Respond to ITB date will be counted towards meeting the DBE participation goal. The Bidder's selection of a firm that is not yet certified or whose application for certification has not yet been approved, or the Bidder's assumption that the firm may be certified prior to the Bid opening date shall not be taken into consideration for good faith efforts evaluation, and shall

not relieve the Bidder from complying with good faith efforts requirements.

2. If the apparent successful Bidder fails to meet the Contract DBE goal, but other Bidders meet it, the District will consider for good faith efforts evaluation, whether, with additional reasonable efforts, the apparent successful Bidder could have met the DBE goal.

3. The final subcontracting decisions made by the Bidder. The District will give considerably greater weight to the final decisions of the Bidder to subcontract to DBEs, than to statements in the Bidder's solicitation letters indicating its intent to subcontract, or to the number of DBEs contacted.

4. Failure of a Bidder to subcontract portions of Work that it would otherwise perform itself, or to enter into a joint venture arrangement in order to meet the DBE goal, will be considered adversely if the Bidder otherwise cannot reasonably have been expected to meet the DBE participation goal.

13.B.2.h Hearing On Reconsideration. If it appears to the District that the apparent low Bidder has submitted all DBE documentation in compliance with Section 13.B.2.e, including but not limited to good faith efforts documentation if applicable, but has neither achieved the indicated DBE goal nor made sufficient good faith efforts to meet the DBE goal, such Bidder will be notified that its Bid will be recommended for rejection and the reasons therefore. Within five (5) Working Days of such telephone and/or facsimile notification, the apparent low Bidder may request a hearing. As a condition of the District scheduling a hearing, a Bidder shall send a check made out to the San Francisco Bay Area Rapid Transit District for $1,500 to cover the Bidder's share of the costs of the hearing. Such hearing will be held at the convenience of the District but no later than ten (10) Working Days after receipt of the request and in accordance with the Office of Civil Rights' Hearing

Procedures, copies of which are available upon request. At such hearing, the Bidder shall bear the burden of demonstrating:

1. Achievement of the DBE goal as of the date of Bid opening, as documented in the Bid, or

2. Good faith efforts made prior to Bid submission that, given all relevant circumstances, could have been expected to produce a level of DBE participation that met the DBE goal.

13.B.2.i Award. Any Award of this Contract shall be to the lowest responsible Bidder whose Bid complies with all the requirements prescribed and who has met the DBE goal or has demonstrated, to the satisfaction of the District, good faith efforts to do so. Meeting the DBE goal, or demonstrating to the satisfaction of the District good faith efforts to do so is a condition for being eligible for Award.

13.B.2.j Substitution of DBE Subcontractors or Suppliers. Should substitution of any DBE listed on the Designation of Subcontractors, DBEs Form become necessary, Contractor shall, subject to the approval of the District, replace the affected DBE with another DBE or show that it made good faith efforts to do so. As used in this Section 13.B.2.j "good faith efforts" imposed on a Contractor in connection with substitution of DBEs requires the Contractor to follow the good faith efforts criteria specified in Section 13.B.2.q. Bidder shall provide completed DBE certification documents for each new DBE.

13.B.2.k Change Orders. Contractor shall make good faith efforts to meet the DBE goal offered in the Bid in the performance of work under any Change Orders that may be issued under this Contract. As used in this Article, "good faith efforts" to be undertaken by a Contractor in connection with Change Orders are those that, given all relevant circumstances, a Contractor actively and aggressively seeking to meet the DBE participation requirements would make. Only those efforts made prior to the District's determination of a failure to comply with the DBE participation requirements will be considered for evaluation of good faith efforts. The Contractor assumes responsibility for being informed and complying with the Contract's requirements. In determining whether good faith efforts regarding Change Orders have been made, the District will consider, on the basis of documentation timely submitted by the Contractor, whether the actions taken by the Contractor meet the good faith efforts requirements. Only steps taken by the Contractor

(as opposed to those taken on the Contractor's behalf by a third party) will be considered.

13.B.2.l DBE Records. Contractor shall maintain records to verify DBE participation as set forth in the Bid and as modified in any way during the course of the Contract. Such records shall show the name and business address of each DBE participating in the Contract and the total dollar amount actually paid each and the date of payment. A monthly report based on these records and certified to be correct by the Contractor shall be submitted with monthly invoices. The Contractor shall include in the monthly report any other efforts made which are relevant to meeting the DBE goal. The Contractor shall also submit with the first monthly report copies of all DBE Subcontracts and purchase orders that have been entered into or issued in connection with the Contract, and shall submit with subsequent monthly reports copies of all invoices submitted by each DBE during the reporting period. No invoice will be approved for payment unless the current report and all required attachments have been furnished. A DBE final report shall be submitted with the proposed Final Invoice.

13.B.2.m Participation in DBE Programs. The Contractor shall participate in Federal, State, and local programs designed to assist DBE firms, including, but not limited to, the FTA Bonding and Lending Program.

13.B.2.n Discrimination Prohibited. No person shall be excluded from participation in, denied the benefits of, or otherwise discriminated against in connection with the Award and performance of this Contract on the grounds of race, color, national origin or sex.

13.B.2.o Noncompliance. Failure to comply with the requirements of Sections 13.B.2.j, 13.B.2.k, 13.B.2.l, 13.B.2.m, and 13.B.2.n or failure to maintain the level of DBE participation offered in the Bid in accordance with these DBE provisions, shall be grounds, at the discretion of the District, for termination of the Contract in whole or in part, or for withholding payments due the Contractor during the period of noncompliance.

13.B.2.p DBE Participation Enforcement Procedures.

1. Within five (5) Working Days of the Contractor receiving a notice from the District that it has failed to meet the DBE requirements, and has failed to demonstrate sufficient good faith efforts to do so, Contractor may request a

hearing on reconsideration of the District's determination. Such hearing will be held at the convenience of the District but no later than ten (10) Working Days after receipt of the request and in accordance with the District's Office of Civil Rights Hearing Procedures, copies of which are available upon request. At such hearing, the Contractor shall bear the burden of demonstrating:

a. Compliance with the DBE participation requirements and reporting obligations; or

b. Compliance with applicable good faith efforts requirements listed in Section 13.B.2.q regarding substitution of DBE Subcontractors or Suppliers made prior to the District's determination of a deficiency that, given all relevant circumstances, could have been expected to result in meeting the DBE participation requirements, respectively; or

c. Compliance with the applicable good faith efforts requirements related to Change Orders made prior to the District's determination of a deficiency, that, given all relevant circumstances, could have been expected to result in meeting the DBE requirements.

13.B.2.q Good Faith Efforts Regarding Substitution of DBEs. Good faith efforts regarding substitution of DBE Subcontractors and Suppliers are those that, given all relevant circumstances, a Contractor actively and aggressively seeking to meet the DBE participation requirements would make. Only those efforts made prior to the District's determination of a failure to comply with the DBE participation requirements will be considered for evaluation of good faith efforts. The Contractor assumes responsibility for being informed and complying with the Contract's DBE requirements.

In determining whether good faith efforts have been made, the District will consider, on the basis of documentation timely submitted by the Contractor, whether the actions listed below have been taken. Only steps taken by the Contractor (as opposed to those taken on the Contractor's behalf by a third party) will be considered. The steps listed below are reflective of good faith efforts taken by a Contractor actively and aggressively seeking to meet the DBE participation requirements. The District considers

each of the listed steps particularly significant in evaluating a Contractor's good faith efforts.

1. Advertisements. The Contractor shall have in place advertisements soliciting proposals or bids from DBEs for substitution of DBE Subcontractors. Advertisements shall be in place for a reasonable period of time to allow DBEs to respond. Such advertisements shall refer only to bids for the District's Contract and shall specify the categories of work for which subcontracting opportunities exist. The advertisements shall be placed in three (3) or more paid daily or weekly minority focus publications or media. The advertisements shall be in publications or media that can be reasonably expected to reach DBE firms that are likely to submit a proposal or bid to the Contractor.

2. Letters.

    a. A Contractor shall solicit proposals or bids for additional work needed for substitution of DBE Subcontractors or Suppliers by mailing registered or certified letters to DBEs qualified to perform those categories of work which are needed. Solicitation letters shall be mailed with sufficient time to allow DBEs to respond. A sufficient number of letters shall be mailed to appropriate certified DBE firms for each category of work sought to be subcontracted based on the DBEs listed in the CUCP database for the category sought. As used herein, "appropriate" refers to those firms performing work related to the scope of the Work of this Contract.
    b. The letters to certified DBE firms shall:
        (i) Clearly identify portions of the Work which the Contractor is willing to have performed by Subcontractors, and offer to break down any portion of the Work into economically feasible units in order to facilitate DBE participation.

        (ii) Offer assistance with regard to bonding requirements and insurance requirements, where applicable, and/or financing (e.g. lines of credit), specifying the type of assistance that the

Contractor is offering. Assistance may include, but is not limited to:

(1) Contractor bonding and/or insurance companies on behalf of DBEs.

(2) Arranging with sureties incremental or phased bonding for the DBEs.

(3) Paying for the cost of the bond or insurance.

(4) Waiving bonding or insurance requirements

(5) Referring DBEs to Business Development Centers or other resource agencies who may assist DBEs in obtaining bonding, insurance, or lines of credit.

(iii) Offer to make plans and specifications available to DBEs at reasonable hours for viewing, copying, or borrowing and shall provide a list containing the location of plan rooms.

c. The Contractor shall use the CUCP database as the source of DBEs for solicitation. Contractors may review the names and addresses of firms certified under the CUCP on the following website: www.bart.gov.

In addition to the mandatory requirements to use the CUCP Database, the Contractor is encouraged to use the services of minority, women, and small business community organizations, and/or contractors' groups, in order to identify certified DBEs for work under the Contract. A listing of such organizations is available from the District's Office of Civil Rights.

3. Follow-Up of Initial Solicitations. The Contractor shall follow-up initial solicitations of DBE proposals or bids no later than ten (10) Days after the mailing of the initial solicitation letters. The follow-up shall be conducted by

someone familiar with the Contract. If, due to the schedule established by the District, ten (10) Days are not available, follow-up within a shorter period of time is required. Such follow-up activity shall be documented by telephone logs or other written documentation which shall provide, at a minimum, the following information:

a. Type of contact e.g., telephone call, visit, letter.
b. Name and position of person who made contact on behalf of the Contractor.
c. Name and address of firm contacted.
d. Name and position of person contacted, telephone number, and date of contact.
e. The response from the firm contacted with regard to its interest in submitting a proposal or bid.
f. Follow-up, if any, to the assistance offered in the initial solicitation letter with regard to breakdown of work into economically feasible units, bonding, insurance, lines of credit, and plans and specifications.
g. For each DBE contacted who declined to submit a proposal or bid, the reason provided by the DBE for declining to submit a proposal or bid. If the reason cited relates to bonding, financing or insurance, the Contractor must provide documentation describing in detail the assistance offered by the Contractor to the DBE.

4. Response from Interested DBEs. The Contractor shall submit records of responses, proposals and/or bids received from DBEs, which shall include, at a minimum, the following information:

a. Names, positions, addresses and telephone numbers of all DBEs that responded to the Contractor's solicitation.

b. All responses (including requests for assistance or information), proposals or bids received, and whether such responses, proposals or bids were

in writing or verbal. In the case of written responses, copies of such responses.

c. The date each response was received by the Contractor.

5. Contractor's Evaluation of Interested DBEs. The Contractor shall submit documentation of its evaluation of proposals or bids received from DBEs. For each DBE that responded to the Contractor's solicitation, the Contractor shall document the following:

   a. A summary of all communications and negotiations, if any, between the Contractor and the DBE.
   b. A description of specific assistance agreed to be provided by the Contractor to the DBE with regard to bonding, insurance, and/or obtaining plans and specifications.
   c. If the proposal or bid was rejected, the reasons for rejection. The District may deem that the Contractor has not made good faith efforts if DBE proposals or bids have been rejected without adequate reason. Price alone will not be considered to be an adequate reason for rejection unless each of the following factors has been met on the basis of documentation submitted.
      (i) The Contractor contacted the DBE firm and ascertained that the DBE ully understands the scope of the work and has not included work beyond the scope and/or overhead items already covered by the District, e.g. insurance for general liability and workers' compensation if the Contract is covered under the District's Owner Controlled Insurance Program.
      (ii) In view of all relevant circumstances, the DBE proposal or bid rejected for price alone was significantly higher than other proposals or bids received for the work.

   d. If the proposal or bid was rejected for any reason, a copy of the DBEs proposal or bid along with copies of all proposals or bids received from non-

DBE firms for the same or similar scope of work.

e. If a DBE was rejected as unqualified, a description of the investigation conducted by the Contractor prior to reaching the conclusion that the DBE was unqualified.

6. Other Efforts. The Contractor shall include in any report regarding substitution of DBE firms submitted to the District any other efforts made to meet the DBE requirements that are not listed above.

13.B.2.r Good Faith Efforts Assessment. In addition to determining whether the Contractor has taken actions described in Section 13B.2.q, the District will consider the following factors in determining whether good faith efforts have been met:

1. Only firms certified prior to the substitution date will be counted towards meeting the DBE participation goal. The Contractor's selection of a firm that is not yet certified, or whose application for certification has not yet been approved, or the Contractor's assumption that the firm may be eligible for certification shall not be taken into consideration for good faith efforts evaluation, and shall not relieve the Contractor from complying with good faith efforts requirements.

2. The final decisions made by the Contractor. The District will give considerably greater weight to the final decisions of the Contractor to contract with DBEs, than to statements in the Contractor's solicitation letters indicating its intent to contract, or to the number of DBEs contacted.

13.B.2.s Posting of DIR Posters. Contractor shall post the State Department of Industrial Relations (DIR) Posters in a prominent place in each Jobsite. Minimum Poster size is 8 ½" X 11". Posters specifications can be obtained at http://www.dir.ca.gov/

With respect to the Designation of Subcontractors and DBEs Form referenced above, Bidders shall complete **Exhibit H**

13.C Buy America Certification

Any contract resulting from this RFQ is subject to the Buy America requirements of 49 USC 5323(j), and applicable regulations in 49 CFR Part 661 as may be amended from time to time. As any contract resulting from this RFQ is expected to involve fees in excess of $100,000, the Bidder shall

complete and sign the Buy America Certificate included as **Exhibit G**. In accordance with 49 CFR Part 661.13, failure of the selected Bidder to appropriately execute the Buy America Certification will make the Bid non-responsive.

13.D. Debarment Certification – Subcontractors

The Certification of all Subcontractors listed in the Designation of Subcontractors and DBEs Form, receiving an amount in excess of $100,000 may be submitted with the Bid, but shall be submitted by the Bidder to MTCP not later than 45 days following the date of the bid opening. Bidders are advised that failure to submit all such Certifications by the specified date may delay or prevent Award to such Bidder. Following Award, the Certifications of all other proposed Subcontractors or sub-suppliers of any tier receiving an amount in excess of $100,000 shall be submitted by the General Contractor to MTCP at least fourteen (14) calendar days before the commencement of work by that subcontractor or supplier.

13. E Lobbying Certification – Subcontractors

The Lobbying Certification of all Subcontractors listed in the Designation of Subcontractors and DBEs Form, receiving an amount in excess of $100,000 may be submitted with the Bid, but shall be submitted by the Bidder to MTCP not later than 45 days following the date of the bid opening. Bidders are advised that failure to submit all such Certifications by the specified date may delay or prevent Award to such Bidder. Following Award, the Certifications of all other proposed Subcontractors or sub-suppliers of any tier receiving an amount in excess of $100,000 shall be submitted by the General Contractor to MTCP at least fourteen (14) calendar days before the commencement of work by that subcontractor or supplier.

14. Submitting Bids

14.A Address

Bids shall be submitted in accordance with the Invitation to Bid, and in an opaque, sealed envelope which shall include the name and address of the Bidder and be addressed as follows:

BY HAND DELIVERY/U.S. MAIL:
Marie Debor
Macarthur Transit Community Partners, LLC
600 California Street, Suite 900
San Francisco, CA 94108

14.B Envelope

The envelope shall be clearly marked as follows:

Bid FOR PLAZA IMPROVEMETNS AT MACARTHUR TRANSIT VILLAGE - GENERAL CONTRACTOR

Date and Time of submission (as indicated in the Invitation to Bid) Name of the Bidder.

15. Withdrawal of Bid

A Bid may be withdrawn at any time prior to the Bid Due Date fixed in the Invitation to Bid only by filing a written request with MTCP. The request shall be executed by the Bidder or Bidder's representative. The withdrawal of a Bid does not prejudice the right of the Bidder to file a new Bid. Bids received after the Bid Due Date fixed in the Invitation to Bid will not be considered nor may any Bid be withdrawn after that time except as provided in Paragraph 18 of these Instructions to Bid.

16. Disqualification of Bidders

More than one Bid from an individual, firm, partnership, corporation, or combination thereof under the same or different names will not be considered. Reasonable grounds for believing that any individual, firm, partnership, corporation, or combination thereof is interested as a principal in more than one Bid for the work contemplated may cause the rejection of all Bids in which such individual, firm, partnership, corporation, or combination thereof is interested.

If Bidder is a joint venture, and Bidder fails to submit a copy of the executed joint venture agreement attached to the Statement of Qualifications and Business References for Construction, such failure to attach the copy of the agreement may render the Bid non-responsive.

17. Irregular Bids

Bids may be rejected if they show such items as: alteration of form; additions not called for; conditional Bids; incomplete Bids; irregularities which make the Bids incomplete, indefinite, or ambiguous; improper markings and identifications; obviously unbalanced prices; a signature by other than an authorized person; Addenda not properly acknowledged; Bid form not signed; Bid form not completed in ink, printed or typed; failure to use the designated Bid form; or Bid materially fails to conform to Invitation to Bid and Instructions to Bidders.

18. Relief of Bids

A Bidder shall not be relieved of the Bid unless MTCP consents nor shall any change be made in the Bid because of mistake.

If a mistake is made, it shall be the responsibility of the Bidder to give MTCP a written notice of the mistake within five (5) calendar days after the opening of the Bids. The notice shall specify in detail how the mistake occurred.

19. Bid Opening

Sealed bids will be accepted at the MTCP office at 600 California St, Suite 900, San Francisco, CA 94108 until 10:00 AM on the date provided on Page 1 of this Invitation to Bid. At that time, said bids will be publicly opened and read in the Conference Room at the same address.

20. Evaluation and Award

20.A Rejection of Bid

MTCP reserves, in its sole discretion, the right to reject any and all Bids and to waive informalities and minor irregularities in Bids received, other provisions in the RFP documents notwithstanding. Award of a Contract is subject, in part, to the availability of funding. This Invitation to Bid does not commit MTCP to award a contract or to pay any costs incurred in the preparation or submittal of a Bid.

20.B Evaluation

The selection of the contractor is based on the lowest responsive Bid. The lowest responsible bidder agrees to perform that portion of other alternates on the low bidder's Bid Sheet that may be designated by MTCP prior to the signature of the Project Contract. The Bidder shall complete the Bid Form, including item totals for all bid items, total Base Bid, and all alternates for MTCP's convenience. MTCP will calculate the total Base Bid separately. In the event of a discrepancy between MTCP's calculations and the item totals for all bid items as submitted by the Bidder, MTCP's calculations shall govern.

21. Time of Award

Award of the Contract, if it be awarded, will be to the lowest responsible Bidder whose Bid complies with the requirements prescribed and whose qualifications are satisfactory to MTCP. Any such Award will be made pursuant to a Notice of Award signed by MTCP, or authorized representative, within ninety (90) calendar days after the opening of the Bids. If necessary, the period of time specified may be extended by written agreement between MTCP, by and through its Managing

Member or authorized representative, and the Bidder or Bidders concerned. If such an extension is agreed to, the Bidder or Bidders concerned shall, as necessary, extend the effective date of the Bidder's Security so that it remains in full force and effect during the extension period. Award of the Contract will occur when a written Notice of Award, signed by MTCP's President, or authorized representative, is placed in the mail or otherwise transmitted to a Bidder.

22. Execution of Contract

The Bidder to whom an Award is made shall execute the Contract and furnish the required Performance and Payment Bonds and specified Certificates of Insurance within ten (10) calendar days after being given notice of the Award unless MTCP, at its discretion, allows additional time in writing for such submissions. Execution of the Contract requirements for bonds and insurance requirements are specified in the General Conditions, Article 11. The form of the Contract is included in **Exhibit P and Q**.

END OF INSTRUCTIONS TO BID

PART 3:
INTENTIONALLY OMITTED

PART 4:

BID FORM

Including
GENERAL CONTRACTOR FEES AND GENERAL CONDITIONS

Please complete the sheets included in this Part 4

BID FORM

Pursuant to and in compliance with the Notice to Bidders, Instructions to Bidders and the Contract Documents relating to construction of:

Macarthur BART Plaza Improvements, 555 40th Street, Oakland, California
including Addenda, the undersigned bidder,

Name of Bidder: _____

Address of Bidder: _____

Phone of Bidder: _____

Date of Bid: _____

having become thoroughly familiar with the terms and conditions of the proposed Contract Documents and with local conditions affecting the performance and costs of the Work at the place where the Work is to be completed, and having fully inspected the site in all particulars, hereby proposes and agrees to fully perform the Work within the time stated and in strict accordance with the proposed Contract Documents, including furnishing of any and all labor and materials, and to do all of the work required to construct and complete said Work in accordance with the Contract Documents, for the following amount and time:

BASE BID PRICE

BASE BID: _____
DOLLARS

($ _____)

ALTERNATE PRICES

Indicate increase or decrease.

1. **Bid Alternate No. 1: Painting underside of freeway structure and piers.**

$_____

2. **Bid Alternate No. 2: Install new conduit to all lights.**

$_____

3. **Bid Alternate No. 3: Install bench type I.**

$_____

A. Bid Security

A Bid Bond, equivalent to 5 percent of the bid price, must be issued by a fully qualified surety company acceptable to Owner and listed as a company currently authorized under 31 CFR, Part 223 as possessing a Certificate of Authority as described thereunder.

B. Rights Reserved

In submitting this Bid, it is understood and agreed by bidder that the right is reserved by the Owner to reject any and all bids, or part of any bid, and it is agreed that the Bid may not be withdrawn for a period of (90) days subsequent to the opening of bids without the written consent of the Owner.

It is also understood and agreed that if the undersigned bidder should withdraw any part or all of this bid within 90 days after the bid opening without the written consent of the Owner, shall refuse or be unable to enter into this Contract, as provided above, or refuse or be unable to furnish adequate and acceptable Performance Bonds and Labor and Material Payments Bonds, as provided above, or refuse or be unable to furnish adequate and acceptable insurance, as provided above, he shall forfeit his bid security to the extent of the Owner's damages occasioned by such withdrawal, or refusal, or inability to enter into an agreement, or provide adequate security therefor.

The undersigned understands that any material alteration of any of the above or any of the material contained on this form, other than that requested, will render the bid unresponsive.

The undersigned has carefully checked all bid figures and agrees that the Owner shall not be responsible or chargeable for any errors or omissions on the part of the undersigned in making up this bid.

The undersigned acknowledges that the Owner reserves the right to reject this bid, but that this bid shall remain open and shall not be withdrawn for a period of 90 days from the date prescribed for its opening.

If written notice of the acceptance of this bid is mailed or delivered to the undersigned within 90 days after the date set for the opening of this bid, or at any other time thereafter before it is withdrawn, the undersigned will execute and deliver the Contract Documents to the Owner in accordance with this bid as accepted, and will also furnish and deliver to the Owner proof of insurance coverage within 15 days after personal delivery of, or after deposit in the mails of the notification of acceptance of this bid.

Bidder is licensed by the State of California under Contractor's License Number _____, Class _____.

If bidder is a corporation, state legal name of corporation, state of incorporation, and name of president and secretary.

Name of Corporation:

_____

Name of President:

_____

Name of Secretary:

_____

Authorized Signature
and Title of Signatory:

_____

Date:

_____

If bidder is not a corporation, state name under which business is conducted, and names of principal owners:

Name of Company:

_____

Name of Principal Owners:

_____

Authorized Signature
and Title of Signatory:

_____

Date:

_____

END OF DOCUMENT

PART 4 (Table 1)

INVITATION TO BID: General Contractor Selection for the Macarthur BART Plaza Improvements

BID FORM – BASE BID

CSI Division	Division Title	Bid Amount
1	General Requirements	$
2	Existing Conditions/Demolition	
3	Concrete	
4	Masonry	
5	Metals	
6	Wood, Plastics & Composites	
7	Thermal & Moisture Protection	
8	Openings	
9	Finishes	
10	Specialties	
11	Equipment	
12	Furnishings	
13	NOT USED	
14	NOT USED	
15	NOT USED	
16	NOT USED	
17	NOT USED	
18	NOT USED	
19	NOT USED	
20	NOT USED	
21	NOT USED	
22	Plumbing	
23	NOT USED	
24	NOT USED	
25	NOT USED	
26	Electrical	
27	Communications	
28	Electronic Safety & Security	
29	NOT USED	
30	NOT USED	
31	Earthwork	

CSI Division	Division Title	Bid Amount
32	Exterior Improvements	
33	Utilities	
34 thru 48	NOT USED	
	SUBTOTAL: ALL CSI DIVISIONS	$0
	GENERAL CONTRACTOR FEE	
	GENERAL CONTRACTOR BOND	
	SUBCONTRACTOR BOND (if applicable)	
	TOTAL	$0

Part 5:

Exhibits

A. Acknowledgement of Receipt of Addenda to the ITB
B. FTA Required Provisions
C. Non-Collusion Declaration
D. Fair Employment Certification
E. Certification Regarding Debarment
F. Non-Lobbying Certification
G. Buy America Certification
H. Designation of Subcontractors and DBEs
I. Non Residence Certification
J. Insurance Requirements – OPA Exhibit G, HCD Exhibit E, BART & MTCP
K. Project Labor Agreement
L. City of Oakland Conditions of Approval
M. City of Oakland Mitigation Monitoring & Reporting Program
N. OPA Sections 8.7, 8.8, 8.3, 11.1.2, 1.1.16
O. BART Design and Construction Agreement - Sections I, IV, V, and VI
P. Contract Form – AIA A101
Q. General Conditions – AIA 201
R. Plans
S. Specifications
T. Geotechnical Report and three letters from Geotechnical Consultant
U. Bart Facilities Standards

EXHIBIT A

ACKNOWLEDGEMENT OF RECEIPT OF ADDENDA TO ITB

Receipt of the following Addenda to the Invitation to Bid for Selection of a General Contractor for the Macarthur BART Plaza Improvements is hereby acknowledged:

Addenda numbers _____

The Bidder, _____,

hereby certifies that Bidder has read the Invitation to Bid in its entirety, understands its requirements, and has asked for explanations of anything it did not understand.

Bidder holds California Contractor's license No. _____, Classification _____. The license expiration date is _____. Bidder declares under penalty of perjury that the foregoing is true and correct.

_____
Signature of Bidder

_____
Name

_____
Title

Date:_____

EXHIBIT B

FTA REQUIRED PROVISIONS

This contract is funded, in part, by an FTA grant. Bidders should note that FTA requirements flow down to the contractor and subcontracts awarded under this contract unless otherwise specified in the following sections.

1. FLY AMERICA REQUIREMENTS
49 U.S.C. § 40118
41 CFR Part 301-10

Fly America Requirements
The Contractor agrees to comply with 49 U.S.C. 40118 (the "Fly America" Act) in accordance with the General Services Administration's regulations at 41 CFR Part 301-10, which provide that recipients and subrecipients of Federal funds and their contractors are required to use U.S. Flag air carriers for U.S Government-financed international air travel and transportation of their personal effects or property, to the extent such service is available, unless travel by foreign air carrier is a matter of necessity, as defined by the Fly America Act. The Contractor shall submit, if a foreign air carrier was used, an appropriate certification or memorandum adequately explaining why service by a U.S. flag air carrier was not available or why it was necessary to use a foreign air carrier and shall, in any event, provide a certificate of compliance with the Fly America requirements. The Contractor agrees to include the requirements of this section in all subcontracts that may involve international air transportation.

---

2. BUY AMERICA REQUIREMENTS
49 U.S.C. 5323(j)
49 CFR Part 661

Buy America - The contractor agrees to comply with 49 U.S.C. 5323(j) and 49 C.F.R. Part 661, which provide that Federal funds may not be obligated unless steel, iron, and manufactured products used in FTA-funded projects are produced in the United States, unless a waiver has been granted by FTA or the product is subject to a general waiver. General waivers are listed in 49 C.F.R. 661.7, and include final assembly in the United States for 15 passenger vans and 15 passenger wagons produced by Chrysler Corporation, and microcomputer equipment and software. Separate requirements for rolling stock are set out at 49 U.S.C. 5323(j)(2)(C) and 49 C.F.R. 661.11. Rolling stock must be assembled in the United States and have a 60 percent domestic content.

A bidder or offeror must submit to the FTA recipient the appropriate Buy America certification (below) with all bids or offers on FTA-funded contracts, except those subject to a general waiver. Bids or offers that are not accompanied by a completed Buy America certification must be rejected as nonresponsive. This requirement does not apply to lower tier subcontractors.

---

4. CARGO PREFERENCE REQUIREMENTS
46 U.S.C. 1241
46 CFR Part 381

Cargo Preference - Use of United States-Flag Vessels - The contractor agrees: a. to use privately owned United States-Flag commercial vessels to ship at least 50 percent of the gross tonnage (computed separately for dry bulk carriers, dry cargo liners, and tankers) involved, whenever shipping any equipment,

material, or commodities pursuant to the underlying contract to the extent such vessels are available at fair and reasonable rates for United States-Flag commercial vessels; b. to furnish within 20 working days following the date of loading for shipments originating within the United States or within 30 working days following the date of leading for shipments originating outside the United States, a legible copy of a rated, "on-board" commercial ocean bill-of -lading in English for each shipment of cargo described in the preceding paragraph to the Division of National Cargo, Office of Market Development, Maritime Administration, Washington, DC 20590 and to the FTA recipient (through the contractor in the case of a subcontractor's bill-of-lading.) c. to include these requirements in all subcontracts issued pursuant to this contract when the subcontract may involve the transport of equipment, material, or commodities by ocean vessel.

---

5. ENVIRONMENTAL PROTECTION

23 USC 139, 326
42 USC 4321 – 4335
23 CFR Part 771
40 CFR Parts 1500 – 1508
49 CFR Part 622

The Contractor agrees to comply with all applicable requirements of the National Environmental Policy Act of 1969, as amended, (NEPA) 42 U.S.C. §§ 4321 through 4335 (as restricted by 42 U.S. C. § 5159, if applicable); Executive Order No. 11514, as amended, "Protection and Enhancement of Environmental Quality," 42 U.S.C. § 4321 note; FTA statutory requirements at 49 U.S.C. § 5324(b); U.S. Council on Environmental Quality regulations pertaining to compliance with NEPA, 40 C.F.R. Parts 1500 through 1508; and joint FHWA FTA regulations, "Environmental Impact and Related Procedures," 23 C.F.R. Part 771 and 49 C.F.R. Part 622; and other applicable Federal environmental protection regulations that may be promulgated at a later date. The Contractor agrees to comply with the applicable provisions of 23 U.S.C. § 139 pertaining to environmental procedures, and 23 U.S.C. § 326, pertaining to Purchaser's responsibility for categorical exclusions, in accordance with the provisions of joint FHWA/FTA final guidance, "SAFETEA-LU Environmental Review Process (Public Law 109-59)," 71 Fed. Reg. 66576 *et seq*. November 15, 2006 and any applicable Federal directives that may be issued at a later date, except to the extent that FTA determines otherwise in writing.

---

6. ENERGY CONSERVATION REQUIREMENTS

42 U.S.C. 6321 et seq.
49 CFR Part 18

Energy Conservation - The contractor agrees to comply with mandatory standards and policies relating to energy efficiency which are contained in the state energy conservation plan issued in compliance with the Energy Policy and Conservation Act.

---

7. CLEAN WATER REQUIREMENTS

33 U.S.C. 1251

Clean Water - (1) The Contractor agrees to comply with all applicable standards, orders or regulations issued pursuant to the Federal Water Pollution Control Act, as amended, 33 U.S.C. 1251 et seq. The Contractor agrees to report each violation to the Purchaser and understands and agrees that the Purchaser will, in turn, report each violation as required to assure notification to FTA and the appropriate EPA Regional Office.

(2) The Contractor also agrees to include these requirements in each subcontract exceeding $100,000 financed in whole or in part with Federal assistance provided by FTA.

10. LOBBYING
31 U.S.C. 1352
49 CFR Part 19
49 CFR Part 20

Byrd Anti-Lobbying Amendment, 31 U.S.C. 1352, as amended by the Lobbying Disclosure Act of 1995, P.L. 104-65 [to be codified at 2 U.S.C. § 1601, et seq.] - Contractors who apply or bid for an award of $100,000 or more shall file the certification required by 49 CFR part 20, "New Restrictions on Lobbying." Each tier certifies to the tier above that it will not and has not used Federal appropriated funds to pay any person or organization for influencing or attempting to influence an officer or employee of any agency, a member of Congress, officer or employee of Congress, or an employee of a member of Congress in connection with obtaining any Federal contract, grant or any other award covered by 31 U.S.C. 1352. Each tier shall also disclose the name of any registrant under the Lobbying Disclosure Act of 1995 who has made lobbying contacts on its behalf with non-Federal funds with respect to that Federal contract, grant or award covered by 31 U.S.C. 1352. Such disclosures are forwarded from tier to tier up to the recipient.

---

11. ACCESS TO RECORDS AND REPORTS
49 U.S.C. 5325
18 CFR 18.36 (i)
49 CFR 633.17

Access to Records - The following access to records requirements apply to this Contract:

1. Where the Purchaser is not a State but a local government and is the FTA Recipient or a subgrantee of the FTA Recipient in accordance with 49 C.F.R. 18.36(i), the Contractor agrees to provide the Purchaser, the FTA Administrator, the Comptroller General of the United States or any of their authorized representatives access to any books, documents, papers and records of the Contractor which are directly pertinent to this contract for the purposes of making audits, examinations, excerpts and transcriptions. Contractor also agrees, pursuant to 49 C.F.R. 633.17 to provide the FTA Administrator or his authorized representatives including any PMO Contractor access to Contractor's records and construction sites pertaining to a major capital project, defined at 49 U.S.C. 5302(a)1, which is receiving federal financial assistance through the programs described at 49 U.S.C. 5307, 5309 or 5311.

2. *Not used.*

3. *Not used.*

4. *Not used.*

5. The Contractor agrees to permit any of the foregoing parties to reproduce by any means whatsoever or to copy excerpts and transcriptions as reasonably needed.

6. The Contractor agrees to maintain all books, records, accounts and reports required under this contract for a period of not less than three years after the date of termination or expiration of this contract, except in the event of litigation or settlement of claims arising from the performance of this contract, in which case Contractor agrees to maintain same until the Purchaser, the FTA Administrator, the Comptroller General, or any of their duly authorized representatives, have disposed of all such litigation, appeals, claims or exceptions related thereto. Reference 49 CFR 18.39(i)(11).

7. FTA does not require the inclusion of these requirements in subcontracts.

---

12. FEDERAL CHANGES
49 CFR Part 18

Federal Changes - Contractor shall at all times comply with all applicable FTA regulations, policies, procedures and directives, including without limitation those listed directly or by reference in the Master Agreement between Purchaser and FTA, as they may be amended or promulgated from time to time during the term of this contract. Contractor's failure to so comply shall constitute a material breach of this contract.

---

14. CLEAN AIR
42 U.S.C. 7401 et seq
40 CFR 15.61
49 CFR Part 18

Clean Air - (1) The Contractor agrees to comply with all applicable standards, orders or regulations issued pursuant to the Clean Air Act, as amended, 42 U.S.C. §§ 7401 et seq. The Contractor agrees to report each violation to the Purchaser and understands and agrees that the
Purchaser will, in turn, report each violation as required to assure notification to FTA and the appropriate EPA Regional Office.

(2) The Contractor also agrees to include these requirements in each subcontract exceeding $100,000 financed in whole or in part with Federal assistance provided by FTA.

---

15. RECYCLED PRODUCTS
42 U.S.C. 6962
40 CFR Part 247
Executive Order 12873

Recovered Materials - The contractor agrees to comply with all the requirements of Section 6002 of the Resource Conservation and Recovery Act (RCRA), as amended (42 U.S.C. 6962), including but not limited to the regulatory provisions of 40 CFR Part 247, and Executive Order 12873, as they apply to the procurement of the items designated in Subpart B of 40 CFR Part 247.

---

16. DAVIS-BACON AND COPELAND ANTI-KICKBACK ACTS

Davis-Bacon and Copeland Anti-Kickback Acts

(1) **Minimum wages** - (i) All laborers and mechanics employed or working upon the site of the work (or under the United States Housing Act of 1937 or under the Housing Act of 1949 in the construction or development of the project), will be paid unconditionally and not less often than once a week, and without subsequent deduction or rebate on any account (except such payroll deductions as are permitted by regulations issued by the Secretary of Labor under the Copeland Act (29 CFR part 3)), the full amount of wages and bona fide fringe benefits (or cash equivalents thereof) due at time of payment computed at rates not less than those contained in the wage determination of the Secretary of Labor which is attached hereto and made a part hereof, regardless of any contractual relationship which may be alleged to exist between the contractor and such laborers and mechanics.

Contributions made or costs reasonably anticipated for bona fide fringe benefits under section 1(b)(2) of the Davis-Bacon Act on behalf of laborers or mechanics are considered wages paid to such laborers or mechanics, subject to the provisions of paragraph (1)(iv) of this section; also, regular contributions made or costs incurred for more than a weekly period (but not less often than quarterly) under plans, funds, or programs which cover the particular weekly period, are deemed to be constructively made or incurred during such weekly period. Such laborers and mechanics shall be paid the appropriate wage rate and fringe benefits on the wage determination for the classification of work actually performed, without regard to skill, except as provided in 29 CFR Part 5.5(a)(4). Laborers or mechanics performing work in more than

one classification may be compensated at the rate specified for each classification for the time actually worked therein: Provided, That the employer's payroll records accurately set forth the time spent in each classification in which work is performed. The wage determination (including any additional classifications and wage rates conformed under paragraph (1)(ii) of this section) and the Davis-Bacon poster (WH-1321) shall be posted at all times by the contractor and its subcontractors at the site of the work in a prominent and accessible place where it can be easily seen by the workers.

(ii)(A) The contracting officer shall require that any class of laborers or mechanics, including helpers, which is not listed in the wage determination and which is to be employed under the contract shall be classified in conformance with the wage determination. The contracting officer shall approve an additional classification and wage rate and fringe benefits therefore only when the following criteria have been met:

(1) Except with respect to helpers as defined as 29 CFR 5.2(n)(4), the work to be performed by the classification requested is not performed by a classification in the wage determination; and

(2) The classification is utilized in the area by the construction industry; and (3) The proposed wage rate, including any bona fide fringe benefits, bears a reasonable relationship to the wage rates contained in the wage determination; and

(4) With respect to helpers as defined in 29 CFR 5.2(n)(4), such a classification prevails in the area in which the work is performed.

(B) If the contractor and the laborers and mechanics to be employed in the classification (if known), or their representatives, and the contracting officer agree on the classification and wage rate (including the amount designated for fringe benefits where appropriate), a report of the action taken shall be sent by the contracting officer to the Administrator of the Wage and Hour Division, Employment Standards Administration, U.S. Department of Labor, Washington, DC 20210. The Administrator, or an authorized representative, will approve, modify, or disapprove every additional classification action within 30 days of receipt and so advise the contracting officer or will notify the contracting officer within the 30-day period that additional time is necessary.

(C) In the event the contractor, the laborers or mechanics to be employed in the classification or their representatives, and the contracting officer do not agree on the proposed classification and wage rate (including the amount designated for fringe benefits, where appropriate), the contracting officer shall refer the questions, including the views of all interested parties and the recommendation of the contracting officer, to the Administrator for determination. The Administrator, or an authorized representative, will issue a determination within 30 days of receipt and so advise the contracting officer or will notify the contracting officer within the 30-day period that additional time is necessary.

(D) The wage rate (including fringe benefits where appropriate) determined pursuant to paragraphs (a)(1)(ii) (B) or (C) of this section, shall be paid to all workers performing work in the classification under this contract from the first day on which work is performed in the classification.

(iii) Whenever the minimum wage rate prescribed in the contract for a class of laborers or mechanics includes a fringe benefit which is not expressed as an hourly rate, the contractor shall either pay the benefit as stated in the wage determination or shall pay another bona fide fringe benefit or an hourly cash equivalent thereof.

(iv) If the contractor does not make payments to a trustee or other third person, the contractor may consider as part of the wages of any laborer or mechanic the amount of any costs reasonably anticipated in providing bona fide fringe benefits under a plan or program, Provided, That the Secretary of Labor has found, upon the written request of the contractor, that the applicable standards of the Davis-Bacon Act have been met. The Secretary of Labor may require the contractor to set aside in a separate account assets for the meeting of obligations under the plan or program.

(v)(A) The contracting officer shall require that any class of laborers or mechanics which is not listed in the wage determination and which is to be employed under the contract shall be classified in conformance with the wage determination. The contracting officer shall approve an additional classification and wage rate and fringe benefits therefor only when the following criteria have been met:

(1) The work to be performed by the classification requested is not performed by a classification in the wage determination; and

(2) The classification is utilized in the area by the construction industry; and

(3) The proposed wage rate, including any bona fide fringe benefits, bears a reasonable relationship to the wage rates contained in the wage determination.

(B) If the contractor and the laborers and mechanics to be employed in the classification (if known), or their representatives, and the contracting officer agree on the classification and wage rate (including the amount designated for fringe benefits where appropriate), a report of the action taken shall be sent by the contracting officer to the Administrator of the Wage and Hour Division, Employment Standards Administration, Washington, DC 20210. The Administrator, or an authorized representative, will approve, modify, or disapprove every additional classification action within 30 days of receipt and so advise the contracting officer or will notify the contracting officer within the 30-day period that additional time is necessary.

(C) In the event the contractor, the laborers or mechanics to be employed in the classification or their representatives, and the contracting officer do not agree on the proposed classification and wage rate (including the amount designated for fringe benefits, where appropriate), the contracting officer shall refer the questions, including the views of all interested parties and the recommendation of the contracting officer, to the Administrator for determination. The Administrator, or an authorized representative, will issue a determination with 30 days of receipt and so advise the contracting officer or will notify the contracting officer within the 30-day period that additional time is necessary.

(D) The wage rate (including fringe benefits where appropriate) determined pursuant to paragraphs (a)(1)(v) (B) or (C) of this section, shall be paid to all workers performing work in the classification under this contract from the first day on which work is performed in the classification.

(2) **Withholding** - The Owner shall upon its own action or upon written request of an authorized representative of the Department of Labor withhold or cause to be withheld from the contractor under this contract or any other Federal contract with the same prime contractor, or any other federally-assisted contract subject to Davis-Bacon prevailing wage requirements, which is held by the same prime contractor, so much of the accrued payments or advances as may be considered necessary to pay laborers and mechanics, including apprentices, trainees, and helpers, employed by the contractor or any subcontractor the full amount of wages required by the contract. In the event of failure to pay any laborer or mechanic, including any apprentice, trainee, or helper, employed or working on the site of the work (or under the United States Housing Act of 1937 or under the Housing Act of 1949 in the construction or development of the project), all or part of the wages required by the contract, the Owner may, after written notice to the contractor, sponsor, applicant, or owner, take such action as may be necessary to cause the suspension of any further payment, advance, or guarantee of funds until such violations have ceased.

(3) **Payrolls and basic records** - (i) Payrolls and basic records relating thereto shall be maintained by the contractor during the course of the work and preserved for a period of three years thereafter for all laborers and mechanics working at the site of the work (or under the United States Housing Act of 1937, or under the Housing Act of 1949, in the construction or development of the project). Such records shall contain the name, address, and social security number of each such worker, his or her correct classification, hourly rates of wages paid (including rates of contributions or costs anticipated for bona fide fringe benefits or cash equivalents thereof of the types described in section 1(b)(2)(B) of the Davis-Bacon Act), daily and weekly number of hours worked, deductions made and actual wages paid. Whenever the Secretary of Labor has found under 29 CFR 5.5(a)(1)(iv) that the wages of any laborer or mechanic include the amount

of any costs reasonably anticipated in providing benefits under a plan or program described in section 1(b)(2)(B) of the Davis-Bacon Act, the contractor shall maintain records which show that the commitment to provide such benefits is enforceable, that the plan or program is financially responsible, and that the plan or program has been communicated in writing to the laborers or mechanics affected, and records which show the costs anticipated or the actual cost incurred in providing such benefits. Contractors employing apprentices or trainees under approved programs shall maintain written evidence of the registration of apprenticeship programs and certification of trainee programs, the registration of the apprentices and trainees, and the ratios and wage rates prescribed in the applicable programs.

(ii)(A) The contractor shall submit weekly for each week in which any contract work is performed a copy of all payrolls to the Owner for transmission to the Federal Transit Administration. The payrolls submitted shall set out accurately and completely all of the information required to be maintained under section 5.5(a)(3)(i) of Regulations, 29 CFR part 5. This information may be submitted in any form desired. Optional Form WH-347 is available for this purpose and may be purchased from the Superintendent of Documents (Federal Stock Number 029-005-00014-1), U.S. Government Printing Office, Washington, DC 20402. The prime contractor is responsible for the submission of copies of payrolls by all subcontractors.

(B) Each payroll submitted shall be accompanied by a "Statement of Compliance," signed by the contractor or subcontractor or his or her agent who pays or supervises the payment of the persons employed under the contract and shall certify the following:

(1) That the payroll for the payroll period contains the information required to be maintained under section 5.5(a)(3)(i) of Regulations, 29 CFR part 5 and that such information is correct and complete;

(2) That each laborer or mechanic (including each helper, apprentice, and trainee) employed on the contract during the payroll period has been paid the full weekly wages earned, without rebate, either directly or indirectly, and that no deductions have been made either directly or indirectly from the full wages earned, other than permissible deductions as set forth in Regulations, 29 CFR part 3;

(3) That each laborer or mechanic has been paid not less than the applicable wage rates and fringe benefits or cash equivalents for the classification of work performed, as specified in the applicable wage determination incorporated into the contract.

(C) The weekly submission of a properly executed certification set forth on the reverse side of Optional Form WH-347 shall satisfy the requirement for submission of the "Statement of Compliance" required by paragraph (a)(3)(ii)(B) of this section.

(D) The falsification of any of the above certifications may subject the contractor or subcontractor to civil or criminal prosecution under section 1001 of title 18 and section 231 of title 31 of the United States Code.

(iii) The contractor or subcontractor shall make the records required under paragraph (a)(3)(i) of this section available for inspection, copying, or transcription by authorized representatives of the Federal Transit Administration or the Department of Labor, and shall permit such representatives to interview employees during working hours on the job. If the contractor or subcontractor fails to submit the required records or to make them available, the Federal agency may, after written notice to the contractor, sponsor, applicant, or owner, take such action as may be necessary to cause the suspension of any further payment, advance, or guarantee of funds. Furthermore, failure to submit the required records upon request or to make such records available may be grounds for debarment action pursuant to 29 CFR 5.12.

(4) **Apprentices and trainees** - (i) Apprentices - Apprentices will be permitted to work at less than the predetermined rate for the work they performed when they are employed pursuant to and individually registered in a bona fide apprenticeship program registered with the U.S. Department of Labor, Employment and Training Administration, Bureau of Apprenticeship and Training, or with a State Apprenticeship Agency recognized by the Bureau, or if a person is employed in his or her first 90 days of probationary employment as an apprentice in such an apprenticeship program, who is not individually registered in the program, but

who has been certified by the Bureau of Apprenticeship and Training or a State Apprenticeship Agency (where appropriate) to be eligible for probationary employment as an apprentice. The allowable ratio of apprentices to journeymen on the job site in any craft classification shall not be greater than the ratio permitted to the contractor as to the entire work force under the registered program. Any worker listed on a payroll at an apprentice wage rate, who is not registered or otherwise employed as stated above, shall be paid not less than the applicable wage rate on the wage determination for the classification of work actually performed. In addition, any apprentice performing work on the job site in excess of the ratio permitted under the registered program shall be paid not less than the applicable wage rate on the wage determination for the work actually performed. Where a contractor is performing construction on a project in a locality other than that in which its program is registered, the ratios and wage rates (expressed in percentages of the journeyman's hourly rate) specified in the contractor's or subcontractor's registered program shall be observed. Every apprentice must be paid at not less than the rate specified in the registered program for the apprentice's level of progress, expressed as a percentage of the journeymen hourly rate specified in the applicable wage determination. Apprentices shall be paid fringe benefits in accordance with the provisions of the apprenticeship program. If the apprenticeship program does not specify fringe benefits, apprentices must be paid the full amount of fringe benefits listed on the wage determination for the applicable classification. If the Administrator of the Wage and Hour Division of the U.S. Department of Labor determines that a different practice prevails for the applicable apprentice classification, fringes shall be paid in accordance with that determination. In the event the Bureau of Apprenticeship and Training, or a State Apprenticeship Agency recognized by the Bureau, withdraws approval of an apprenticeship program, the contractor will no longer be permitted to utilize apprentices at less than the applicable predetermined rate for the work performed until an acceptable program is approved.

(ii) Trainees - Except as provided in 29 CFR 5.16, trainees will not be permitted to work at less than the predetermined rate for the work performed unless they are employed pursuant to and individually registered in a program which has received prior approval, evidenced by formal certification by the U.S. Department of Labor, Employment and Training Administration. The ratio of trainees to journeymen on the job site shall not be greater than permitted under the plan approved by the Employment and Training Administration. Every trainee must be paid at not less than the rate specified in the approved program for the trainee's level of progress, expressed as a percentage of the journeyman hourly rate specified in the applicable wage determination. Trainees shall be paid fringe benefits in accordance with the provisions of the trainee program. If the trainee program does not mention fringe benefits, trainees shall be paid the full amount of fringe benefits listed on the wage determination unless the Administrator of the Wage and Hour Division determines that there is an apprenticeship program associated with the corresponding journeyman wage rate on the wage determination which provides for less than full fringe benefits for apprentices. Any employee listed on the payroll at a trainee rate who is not registered and participating in a training plan approved by the Employment and Training Administration shall be paid not less than the applicable wage rate on the wage determination for the classification of work actually performed. In addition, any trainee performing work on the job site in excess of the ratio permitted under the registered program shall be paid not less than the applicable wage rate on the wage determination for the work actually performed. In the event the Employment and Training Administration withdraws approval of a training program, the contractor will no longer be permitted to utilize trainees at less than the applicable predetermined rate for the work performed until an acceptable program is approved.

(iii) Equal employment opportunity - The utilization of apprentices, trainees and journeymen under this part shall be in conformity with the equal employment opportunity requirements of Executive Order 11246, as amended, and 29 CFR part 30.

(5) **Compliance with Copeland Act requirements** - The contractor shall comply with the requirements of 29 CFR part 3, which are incorporated by reference in this contract.

(6) **Subcontracts** - The contractor or subcontractor shall insert in any subcontracts the clauses contained in 29 CFR 5.5(a)(1) through (10) and such other clauses as the Federal Transit Administration may by appropriate instructions require, and also a clause requiring the subcontractors to include these clauses in

any lower tier subcontracts. The prime contractor shall be responsible for the compliance by any subcontractor or lower tier subcontractor with all the contract clauses in 29 CFR 5.5.

(7) **Contract termination: debarment** - A breach of the contract clauses in 29 CFR 5.5 may be grounds for termination of the contract, and for debarment as a contractor and a subcontractor as provided in 29 CFR 5.12.

(8) **Compliance with Davis-Bacon and Related Act requirements** - All rulings and interpretations of the Davis-Bacon and Related Acts contained in 29 CFR parts 1, 3, and 5 are herein incorporated by reference in this contract.

(9) **Disputes concerning labor standards** - Disputes arising out of the labor standards provisions of this contract shall not be subject to the general disputes clause of this contract. Such disputes shall be resolved in accordance with the procedures of the Department of Labor set forth in 29 CFR parts 5, 6, and 7. Disputes within the meaning of this clause include disputes between the contractor (or any of its subcontractors) and the contracting agency, the U.S. Department of Labor, or the employees or their representatives.

(10) **Certification of eligibility** - (i) By entering into this contract, the contractor certifies that neither it (nor he or she) nor any person or firm who has an interest in the contractor's firm is a person or firm ineligible to be awarded Government contracts by virtue of section 3(a) of the Davis-Bacon Act or 29 CFR 5.12(a)(1).

(ii) No part of this contract shall be subcontracted to any person or firm ineligible for award of a Government contract by virtue of section 3(a) of the Davis-Bacon Act or 29 CFR 5.12(a)(1).

(iii) The penalty for making false statements is prescribed in the U.S. Criminal Code, 18 U.S.C. 1001.

---

17. CONTRACT WORK HOURS AND SAFETY STANDARDS ACT

Contract Work Hours and Safety Standards

(1) **Overtime requirements** - No contractor or subcontractor contracting for any part of the contract work which may require or involve the employment of laborers or mechanics shall require or permit any such laborer or mechanic in any workweek in which he or she is employed on such work to work in excess of forty hours in such workweek unless such laborer or mechanic receives compensation at a rate not less than one and one-half times the basic rate of pay for all hours worked in excess of forty hours in such workweek.

(2) **Violation; liability for unpaid wages; liquidated damages** - In the event of any violation of the clause set forth in paragraph (1) of this section the contractor and any subcontractor responsible therefor shall be liable for the unpaid wages. In addition, such contractor and subcontractor shall be liable to the United States for liquidated damages. Such liquidated damages shall be computed with respect to each individual laborer or mechanic, including watchmen and guards, employed in violation of the clause set forth in paragraph (1) of this section, in the sum of $10 for each calendar day on which such individual was required or permitted to work in excess of the standard workweek of forty hours without payment of the overtime wages required by the clause set forth in paragraph (1) of this section.

(3) **Withholding for unpaid wages and liquidated damages** - The Owner shall upon its own action or upon written request of an authorized representative of the Department of Labor withhold or cause to be withheld, from any moneys payable on account of work performed by the contractor or subcontractor under any such contract or any other Federal contract with the same prime contractor, or any other federally-assisted contract subject to the Contract Work Hours and Safety Standards Act, which is held by the same prime contractor, such sums as may be determined to be necessary to satisfy any liabilities of such

contractor or subcontractor for unpaid wages and liquidated damages as provided in the clause set forth in paragraph (2) of this section.

(4) **Subcontracts** - The contractor or subcontractor shall insert in any subcontracts the clauses set forth in paragraphs (1) through (4) of this section and also a clause requiring the subcontractors to include these clauses in any lower tier subcontracts. The prime contractor shall be responsible for compliance by any subcontractor or lower tier subcontractor with the clauses set forth in paragraphs (1) through (4) of this section.

---

19. NO GOVERNMENT OBLIGATION TO THIRD PARTIES

No Obligation by the Federal Government.

(1) The Purchaser and Contractor acknowledge and agree that, notwithstanding any concurrence by the Federal Government in or approval of the solicitation or award of the underlying contract, absent the express written consent by the Federal Government, the Federal Government is not a party to this contract and shall not be subject to any obligations or liabilities to the Purchaser, Contractor, or any other party (whether or not a party to that contract) pertaining to any matter resulting from the underlying contract.

(2) The Contractor agrees to include the above clause in each subcontract financed in whole or in part with Federal assistance provided by FTA. It is further agreed that the clause shall not be modified, except to identify the subcontractor who will be subject to its provisions.

---

20. PROGRAM FRAUD AND FALSE OR FRAUDULENT STATEMENTS AND RELATED ACTS

31 U.S.C. 3801 et seq.
49 CFR Part 31 18 U.S.C. 1001
49 U.S.C. 5307

Program Fraud and False or Fraudulent Statements or Related Acts.

(1) The Contractor acknowledges that the provisions of the Program Fraud Civil Remedies Act of 1986, as amended, 31 U.S.C. § 3801 et seq. and U.S. DOT regulations, "Program Fraud Civil Remedies," 49 C.F.R. Part 31, apply to its actions pertaining to this Project. Upon execution of the underlying contract, the Contractor certifies or affirms the truthfulness and accuracy of any statement it has made, it makes, it may make, or causes to be made, pertaining to the underlying contract or the FTA assisted project for which this contract work is being performed. In addition to other penalties that may be applicable, the Contractor further acknowledges that if it makes, or causes to be made, a false, fictitious, or fraudulent claim, statement, submission, or certification, the Federal Government reserves the right to impose the penalties of the Program Fraud Civil
Remedies Act of 1986 on the Contractor to the extent the Federal Government deems appropriate.

(2) The Contractor also acknowledges that if it makes, or causes to be made, a false, fictitious, or fraudulent claim, statement, submission, or certification to the Federal Government under a contract connected with a project that is financed in whole or in part with Federal assistance originally awarded by FTA under the authority of 49 U.S.C. § 5307, the Government reserves the right to impose the penalties of 18 U.S.C. § 1001 and 49 U.S.C. § 5307(n)(1) on the Contractor, to the extent the Federal Government deems appropriate.

(3) The Contractor agrees to include the above two clauses in each subcontract financed in whole or in part with Federal assistance provided by FTA. It is further agreed that the clauses shall not be modified, except to identify the subcontractor who will be subject to the provisions.

---

21. TERMINATION
49 U.S.C. Part 18
FTA Circular 4220.1F

a. Termination for Convenience (General Provision) The Owner may terminate this contract, in whole or in part, at any time by written notice to the Contractor when it is in the Government's best interest. The Contractor shall be paid its costs, including contract close-out costs, and profit on work performed up to the time of termination. The Contractor shall promptly submit its termination claim to the Owner to be paid the Contractor. If the Contractor has any property in its possession belonging to the Owner, the Contractor will account for the same, and dispose of it in the manner the Owner directs.

b. Termination for Default [Breach or Cause] (General Provision) If the Contractor does not deliver supplies in accordance with the contract delivery schedule, or, if the contract is for services, the Contractor fails to perform in the manner called for in the contract, or if the Contractor fails to comply with any other provisions of the contract, the Owner may terminate this contract for default. Termination shall be effected by serving a notice of termination on the contractor setting forth the manner in which the Contractor is in default. The contractor will only be paid the contract price for supplies delivered and accepted, or services performed in accordance with the manner of performance set forth in the contract.

If it is later determined by the Owner that the Contractor had an excusable reason for not performing, such as a strike, fire, or flood, events which are not the fault of or are beyond the control of the Contractor, the Owner, after setting up a new delivery of performance schedule, may allow the Contractor to continue work, or treat the termination as a termination for convenience.

c. Opportunity to Cure (General Provision) The Owner in its sole discretion may, in the case of a termination for breach or default, allow the Contractor twenty (20) working days in which to cure the defect. In such case, the notice of termination will state the time period in which cure is permitted and other appropriate conditions

If Contractor fails to remedy to the Owner's satisfaction the breach or default of any of the terms, covenants, or conditions of this Contract within twenty (20) working days after receipt by Contractor of written notice from the Owner setting forth the nature of said breach or default, the Owner shall have the right to terminate the Contract without any further obligation to Contractor. Any such termination for default shall not in any way operate to preclude the Owner from also pursuing all available remedies against Contractor and its sureties for said breach or default.

d. Waiver of Remedies for any Breach In the event that the Owner elects to waive its remedies for any breach by Contractor of any covenant, term or condition of this Contract, such waiver by the Owner shall not limit the Owner 's remedies for any succeeding breach of that or of any other term, covenant, or condition of this Contract.

e. *Not used.*

f. *Not used.*

g. *Not used.*

h. Termination for Default (Construction) If the Contractor refuses or fails to prosecute the work or any separable part, with the diligence that will insure its completion within the time specified in this contract or any extension or fails to complete the work within this time, or if the Contractor fails to comply with any other provisions of this contract, the Owner may terminate this contract for default. The Owner shall terminate by delivering to the Contractor a Notice of Termination specifying the nature of the default. In this event, the Owner may take over the work and compete it by contract or otherwise, and may take possession of and use any materials, appliances, and plant on the work site necessary for completing the work. The Contractor and its sureties shall be liable for any damage to the Owner resulting from the

Contractor's refusal or failure to complete the work within specified time, whether or not the Contractor's right to proceed with the work is terminated. This liability includes any increased costs incurred by the Owner in completing the work.

The Contractor's right to proceed shall not be terminated nor the Contractor charged with damages under this clause if:

1. the delay in completing the work arises from unforeseeable causes beyond the control and without the fault or negligence of the Contractor. Examples of such causes include: acts of God, acts of the Owner, acts of another Contractor in the performance of a contract with the Owner, epidemics, quarantine restrictions, strikes, freight embargoes; and

2. the contractor, within [10] days from the beginning of any delay, notifies the Owner in writing of the causes of delay. If in the judgment of the Owner, the delay is excusable, the time for completing the work shall be extended. The judgment of the Owner shall be final and conclusive on the parties, but subject to appeal under the Disputes clauses.

If, after termination of the Contractor's right to proceed, it is determined that the Contractor was not in default, or that the delay was excusable, the rights and obligations of the parties will be the same as if the termination had been issued for the convenience of the Owner.

i. *Not used.*

j. *Not used.*

---

23. PRIVACY ACT
5 U.S.C. 552

Contracts Involving Federal Privacy Act Requirements - The following requirements apply to the Contractor and its employees that administer any system of records on behalf of the Federal Government under any contract:

(1) The Contractor agrees to comply with, and assures the compliance of its employees with, the information restrictions and other applicable requirements of the Privacy Act of 1974,

5 U.S.C. § 552a. Among other things, the Contractor agrees to obtain the express consent of the Federal Government before the Contractor or its employees operate a system of records on behalf of the Federal Government. The Contractor understands that the requirements of the Privacy Act, including the civil and criminal penalties for violation of that Act, apply to those individuals involved, and that failure to comply with the terms of the Privacy Act may result in termination of the underlying contract.

(2) The Contractor also agrees to include these requirements in each subcontract to administer any system of records on behalf of the Federal Government financed in whole or in part with Federal assistance provided by FTA.

---

24. CIVIL RIGHTS REQUIREMENTS
29 U.S.C. § 623, 42 U.S.C. § 2000
42 U.S.C. § 6102, 42 U.S.C. § 12112
42 U.S.C. § 12132, 49 U.S.C. § 5332
29 CFR Part 1630, 41 CFR Parts 60 et seq.

Civil Rights - The following requirements apply to the underlying contract:

(1) Nondiscrimination - In accordance with Title VI of the Civil Rights Act, as amended, 42 U.S.C. § 2000d, section 303 of the Age Discrimination Act of 1975, as amended, 42 U.S.C. § 6102, section 202 of the Americans with Disabilities Act of 1990, 42 U.S.C. § 12132, and Federal transit law at 49 U.S.C. § 5332, the Contractor agrees that it will not discriminate against any employee or applicant for employment because of race, color, creed, national origin, sex, age, or disability. In addition, the Contractor agrees to comply with applicable Federal implementing regulations and other implementing requirements FTA may issue.

(2) Equal Employment Opportunity - The following equal employment opportunity requirements apply to the underlying contract:

(a) Race, Color, Creed, National Origin, Sex - In accordance with Title VII of the Civil Rights Act, as amended, 42 U.S.C. § 2000e, and Federal transit laws at 49 U.S.C. § 5332, the Contractor agrees to comply with all applicable equal employment opportunity requirements of U.S. Department of Labor (U.S. DOL) regulations, "Office of Federal Contract Compliance Programs, Equal Employment Opportunity, Department of Labor," 41 C.F.R. Parts 60 et seq., (which implement Executive Order No. 11246, "Equal Employment Opportunity," as amended by Executive Order No. 11375, "Amending Executive Order 11246 Relating to Equal Employment Opportunity," 42 U.S.C. § 2000e note), and with any applicable Federal statutes, executive orders, regulations, and Federal policies that may in the future affect construction activities undertaken in the course of the Project. The Contractor agrees to take affirmative action to ensure that applicants are employed, and that employees are treated during employment, without regard to their race, color, creed, national origin, sex, or age. Such action shall include, but not be limited to, the following: employment, upgrading, demotion or transfer, recruitment or recruitment advertising, layoff or termination; rates of pay or other forms of compensation; and selection for training, including apprenticeship. In addition, the Contractor agrees to comply with any implementing requirements FTA may issue.

(b) Age - In accordance with section 4 of the Age Discrimination in Employment Act of 1967, as amended, 29 U.S.C. § § 623 and Federal transit law at 49 U.S.C. § 5332, the Contractor agrees to refrain from discrimination against present and prospective employees for reason of age. In addition, the Contractor agrees to comply with any implementing requirements FTA may issue.

(c) Disabilities - In accordance with section 102 of the Americans with Disabilities Act, as amended, 42 U.S.C. § 12112, the Contractor agrees that it will comply with the requirements of U.S. Equal Employment Opportunity Commission, "Regulations to Implement the Equal Employment Provisions of the Americans with Disabilities Act," 29 C.F.R. Part 1630, pertaining to employment of persons with disabilities. In addition, the Contractor agrees to comply with any implementing requirements FTA may issue.

(3) The Contractor also agrees to include these requirements in each subcontract financed in whole or in part with Federal assistance provided by FTA, modified only if necessary to identify the affected parties.

---

25. BREACHES AND DISPUTE RESOLUTION
49 CFR Part 18
FTA Circular 4220.1F

Disputes - Disputes arising in the performance of this Contract which are not resolved by agreement of the parties shall be decided in writing by the authorized representative of the Owner's Public Works Director. This decision shall be final and conclusive unless within [ten (10)] days from the date of receipt of its copy, the Contractor mails or otherwise furnishes a written appeal to the Public Works Director. In connection with any such appeal, the Contractor shall be afforded an opportunity to be heard and to offer evidence in support of its position. The decision of the Public Works Director shall be binding upon the Contractor and the Contractor shall abide be the decision.

Performance During Dispute - Unless otherwise directed by the Owner, Contractor shall continue performance under this Contract while matters in dispute are being resolved.

Claims for Damages - Should either party to the Contract suffer injury or damage to person or property because of any act or omission of the party or of any of his employees, agents or others for whose acts he is legally liable, a claim for damages therefor shall be made in writing to such other party within a reasonable time after the first observance of such injury of damage.

Remedies - Unless this contract provides otherwise, all claims, counterclaims, disputes and other matters in question between the Owner and the Contractor arising out of or relating to this agreement or its breach will be decided by arbitration if the parties mutually agree, or in a court of competent jurisdiction within the State in which the Owner is located.

Rights and Remedies - The duties and obligations imposed by the Contract Documents and the rights and remedies available thereunder shall be in addition to and not a limitation of any duties, obligations, rights and remedies otherwise imposed or available by law. No action or failure to act by the Owner, (Architect) or Contractor shall constitute a waiver of any right or duty afforded any of them under the Contract, nor shall any such action or failure to act constitute an approval of or acquiescence in any breach thereunder, except as may be specifically agreed in writing.

---

28. DISADVANTAGED BUSINESS ENTERPRISE (DBE)
49 CFR Part 26

Disadvantaged Business Enterprises

a. This contract is subject to the requirements of Title 49, Code of Federal Regulations, Part 26, *Participation by Disadvantaged Business Enterprises in Department of Transportation Financial Assistance Programs.* The national goal for participation of Disadvantaged Business Enterprises (DBE) is 10%. **A specific project contract goal of 20 % DBE participation has been established for this project**.

b. The contractor shall not discriminate on the basis of race, color, national origin, or sex in the performance of this contract. The contractor shall carry out applicable requirements of 49 CFR Part 26 in the award and administration of this DOT-assisted contract. Failure by the contractor to carry out these requirements is a material breach of this contract, which may result in the termination of this contract or such other remedy as the Owner deems appropriate. Each subcontract the contractor signs with a subcontractor must include the assurance in this paragraph (*see* 49 CFR 26.13(b)).

c. Bidders are required to document sufficient DBE participation to meet these goals or, alternatively, document adequate good faith efforts to do so, as provided for in 49 CFR 26.53. **Award of this contract is conditioned on submission of the following concurrent with and accompanying sealed bid**:

1. The names and addresses of DBE firms that will participate in this contract;

2. A description of the work each DBE will perform;

3. The dollar amount of the participation of each DBE firm participating;

4. Written documentation of the bidder's commitment to use a DBE subcontractor whose participation it submits to meet the contract goal;

5. Written confirmation from the DBE that it is participating in the contract as provided in the prime contractor's commitment; and

6. If the contract goal is not met, evidence of good faith efforts to do so.

Bidders must present the information required above **as a matter of responsiveness** (*see* 49 CFR 26.53(3)).

d. The contractor is required to pay its subcontractors performing work related to this contract for satisfactory performance of that work no later than 30 days after the contractor's receipt of payment for that work from the **Owner**. In addition, the contractor is required to return any retainage payments to those subcontractors within 30 days after incremental acceptance of the subcontractor's work by the Owner and contractor's receipt of the partial retainage payment related to the subcontractor's work.

e. The contractor must promptly notify **Owner**, whenever a DBE subcontractor performing work related to this contract is terminated or fails to complete its work, and must make good faith efforts to engage another DBE subcontractor to perform at least the same amount of work. The contractor may not terminate any DBE subcontractor and perform that work through its own forces or those of an affiliate without prior written consent of **Owner**.

f. The bidder is directed to the Caltrans UCP (DBE) database to find certified DBEs:

- Go to the Caltrans Business Enterprise Program website: http://www.dot.ca.gov/hq/bep/.
- Click on the link in the left menu titled *Disadvantaged Business Enterprise*
- Click on *Search for a DBE Firm* link
- Click on *Access to the DBE Query Form* located on the first line in the center of the page
- Searches can be performed by one or more criteria
- Follow instructions on the screen.

---

29. METRIC SYSTEM
49 USC 205a

To the extent required by U.S. DOT or FTA, the Contractor agrees to use the metric system of measurement in its Contract activities as may be required by 49 U.S.C. Sect. 205a et seq.; Executive Order No. 12770, "Metric Usage in Federal Government Programs," 15 U.S.C. Sect. 205a; and other regulations, guidelines and policies issued by U.S. DOT or FTA. To the extent practicable and feasible, the Contractor agrees to accept products and services with dimensions expressed in the metric system of measurement.

---

30. INCORPORATION OF FEDERAL TRANSIT ADMINISTRATION (FTA) TERMS
FTA Circular 4220.1F

Incorporation of Federal Transit Administration (FTA) Terms - The preceding provisions include, in part, certain Standard Terms and Conditions required by DOT, whether or not expressly set forth in the preceding contract provisions. All contractual provisions required by DOT, as set forth in FTA Circular 4220.1F, are hereby incorporated by reference. Anything to the contrary herein notwithstanding, all FTA mandated terms shall be deemed to control in the event of a conflict with other provisions contained in this Agreement. The Contractor shall not perform any act, fail to perform any act, or refuse to comply with any Owner requests which would cause Owner to be in violation of the FTA terms and conditions.

---

31. DRUG AND ALCOHOL TESTING
49 U.S.C. §5331
49 CFR Parts 653 and 654

Drug and Alcohol Testing

The contractor agrees to establish and implement a drug and alcohol testing program that complies with 49 CFR Parts 653 and 654, produce any documentation necessary to establish its compliance with Parts 653 and 654, and permit any authorized representative of the United States Department of Transportation or its operating administrations, the State Oversight Agency of California, or the Owner, to inspect the facilities and records associated with the implementation of the drug and alcohol testing program as required under 49 CFR Parts 653 and 654 and review the testing process. The contractor agrees further to certify annually its compliance with Parts 653 and 654 and to submit the Management Information System (MIS) reports before April 15 to the Owner's designated representative: Kelly Hollywood at khollywood@bridgehousing.com. To certify compliance the contractor shall use the "Substance Abuse Certifications" in the "Annual List of Certifications and Assurances for Federal Transit Administration Grants and Cooperative Agreements," which is published annually in the Federal Register.

---

32. DEBARMENT AND SUSPENSION

A. Contractor shall comply with the requirements of Executive Orders Nos. 12549 and 12689, "Debarment and Suspension," 31 USC § 6101 note; and U.S. DOT regulations on Debarment and Suspension at 49 CFR Part 29.

B. Contractor shall refrain from entering into any Subcontract of any amount with a party included in the "U.S. General Services Administration's (U.S. GSA) list of Parties Excluded from Federal Procurement or Nonprocurement Programs," implementing Executive Orders Nos. 12549 and 12689, "Debarment and Suspension" and 49 CFR Part 29. The list also includes the names of parties debarred, suspended, or otherwise excluded by agencies, and contractors declared ineligible for Contract award under statutory or regulatory authority other than Executive Order Nos. 12549 and 12689.

C. Before entering into any Subcontract, Contractor shall obtain a debarment and suspension certification from each prospective Subcontractor containing information about the debarment and suspension status and other specific information about the Subcontractor and its "principals," as defined at 49 USC § 29.105 (p). An example of the appropriate certification is contained in 49 CFR Part 29, Appendix A.

D. Contractor shall require each Subcontractor to refrain from awarding any Subcontract of any amount (at any tier) to a debarred or suspended Subcontractor, and to obtain a similar certification from any Subcontractor (at any tier) seeking a Subcontract exceeding $100,000. An example of the appropriate certification is contained in 49 CFR Part 29, Appendix B."

EXHIBIT C

NONCOLLUSION DECLARATION

(To be executed by Bidder and submitted with Bid)

_____, declares that he or she is _____

of

_____

(Bidder's Name, Title & Company's Name)

the party making the foregoing Bid, that the Bid is not made in the interest of, or on behalf of, any undisclosed person, partnership, company, association, organization, or corporation; that the Bid is genuine and not collusive or sham; that the Bidder has not directly or indirectly colluded, conspired, connived, or agreed with any Bidder or anyone else to put in a sham Bid, or that anyone shall refrain from Bidding; that the Bidder has not in any manner, directly or indirectly, sought by agreement, communication, or conference with anyone to fix its price for Pre-Construction Services, General Contractor Fee or General Conditions, or of that of any other bidder, or to secure any advantage against the public body awarding the Contract of anyone interested in the proposed Contract; that all statements contained in the Bid are true; and, further, that the Bidder has not, directly or indirectly, submitted its price for services or any breakdown thereof, or paid, and will not pay, any fee to any corporation, partnership, company association, organization, bid depository, or to any member or agent thereof to effectuate a collusive or sham bid.

I certify (or declare) under penalty or perjury under the laws of the State of California that the foregoing is true and correct.

Date: _____ _____

Name of Bidder

_____

Signature of Bidder

EXHIBIT D

FAIR EMPLOYMENT PRACTICES CERTIFICATION

The undersigned in submitting a Bid to the Invitation to Bid for Selection of a General Contractor for the Macarthur BART Plaza Improvements for performing Pre-Construction and Construction Services (the "ITB") hereby certifies that it has or will meet the standards of affirmative compliance with the Fair Employment Practices Requirements of the Contract.

_____
Name of Bidder

_____
Signature (Authorized Representative)

_____
Name

_____
Title

_____
Date

EXHIBIT E

CERTIFICATION REGARDING DEBARMENT, SUSPENSION, INELIGIBILITY AND VOLUNTARY EXCLUSION - LOWER TIER COVERED TRANSACTIONS

The Bidder certifies, by submission of this Bid, that neither it nor its principals is presently debarred, suspended, proposed for debarment, declared ineligible, or voluntarily excluded from participation in this transaction by any Federal department or agency.

Date: _____ _____
Name of Bidder

By: _____
Name of Authorized Representative of Bidder

_____
Title

Note: The certification in this clause is a material representation of fact relied upon by the Owner. If it is later determined that the bidder knowingly rendered an erroneous certification, in addition to remedies available to the Owner, the Federal Government may pursue available remedies, including but not limited to suspension and/or debarment. The bidder agrees to comply with the requirements of 49 CFR 29, Subpart C while this offer is valid and throughout the period of any contract that may arise from this offer. The bidder further agrees to include a provision requiring such compliance in its lower tier covered transactions.

GOVERNMENT WIDE DEBARMENT AND SUSPENSION

Instructions for Certification

This contract is a covered transaction for purposes of 49 CFR Part 29. As such, the contractor is required to verify that none of the contractor, its principals, as defined at 49 CFR 29.995, or affiliates, as defined at 49 CFR 29.905, are excluded or disqualified as defined at 49 CFR 29.940 and 29.945.

The contractor is required to comply with 49 CFR 29, Subpart C and must include the requirement to comply with 49 CFR 29, Subpart C in any lower tier covered transaction it enters into.

By signing and submitting its bid or proposal, the bidder or proposer certifies as follows:

The certification in this clause is a material representation of fact relied upon by **Owner**. If it is later determined that the bidder or proposer knowingly rendered an erroneous certification, in addition to remedies available to **Owner**, the Federal Government may pursue available remedies, including but not limited to suspension and/or debarment. The bidder or proposer agrees to comply with the requirements of 49 CFR 29, Subpart C while this offer is valid and throughout the period of any contract that may arise from this offer. The bidder or proposer further agrees to include a provision requiring such compliance in its lower tier covered transactions.

EXHIBIT F

NON-LOBBYING CERTIFICATION

The undersigned certifies, to the best of his or her knowledge and belief, that:

(1) No Federal appropriated funds have been paid or will be paid by, or on behalf of, the undersigned to any person for influencing or attempting to influence an officer or employee of any agency, a Member of Congress, officer or employee of Congress, or an employee of a Member of Congress in connection with the awarding of any Federal contract, the making of any Federal grant, the making of any Federal loan, the entering into of any cooperative agreement and the extension, continuation renewal, amendment, or modification of any Federal contract, grant, loan, or cooperative agreement.

(2) If any funds other than Federal appropriated funds have been paid or will be paid to any person for making lobbying contacts to an officer or employee of any agency, a Member of Congress, officer or employee of Congress, or an employee of a Member of Congress in connection with this Federal contract, grant, loan, or cooperative agreement, the undersigned shall complete and submit Standard Form – LLL, "Disclosure Form to Report Lobbying," in accordance with its instructions [as amended by "Government wide Guidance for New Restrictions on Lobbying," 61 CFR 1413 (1/19/96). Note: Language in paragraph (2) herein has been modified in accordance with Section 10 of the Lobbying Disclosure Act of 1995 (P.L. 104-65, to be codified at 2 U.S.C. 1601, *et seq.*)]

(3) The undersigned shall require that the language of this certification be included in the award documents for all subawards at all tiers (including subcontracts, subgrants, and contracts under grants, loans, and cooperative agreements) and that all subrecipients shall certify and disclose accordingly.

This certification is a material representation of fact upon which reliance was placed when this transaction was made or entered into. Submission of this certification is a prerequisite for making or entering into this transaction imposed by 31 U.S.C. § 1352 (as amended by the Lobbying Disclosure Act of 1995). Any person who fails to file the required certification shall be subject to a civil penalty of not less than $10,000 and not more than $100,000 for each such failure.

[Note: Pursuant to 31 U.S.C. § 1352(c)(1)-(2)(a), any person who makes a prohibited expenditures or fails to file or amend a required certification or disclosure form shall be subject to a civil penalty of not less than $10,000 and not more than $100,000 for each such expenditure or failure.]

The Contractor, _____, certifies or affirms the truthfulness and accuracy of each statement of its certifications and disclosure, if any. In addition, the

Contractor understands and agrees that the provisions of 31 U.S.C. A 3801, *et seq*., apply to this certification and disclosure, if any.

_____

Signature of Contractor's Authorized Official

_____

Name and Title of Contractor's Authorized Official

_____

Date

EXHIBIT G

BUY AMERICA CERTIFICATE

Certification requirement for procurement of steel, iron, or manufactured products

This Buy America Certificate shall be executed by Bidder and any Subcontractors the cost of whose scope of work exceeds $100,000.)

NOTE: The two signature blocks below are mutually exclusive; Bidder shall sign only one. Signing both signature blocks will make the Bid non-responsive.

Certificate of Compliance With 49 USC § 5323(j)(1)

The Bidder hereby certifies that it will comply with the requirements of 49 USC § 5323(j)(1), and the applicable regulations in 49 CFR Part 661.5.

Date _____

Signature _____

Company Name _____

Title _____

Certificate of Non-Compliance With 49 USC § 5323(j)(1)

The Bidder hereby certifies that it cannot comply with the requirements of 49 USC § 5323(j)(1), but it may qualify for an exception to the requirements pursuant to 49 USC § 5323(j)(2)(B) or (j)(2)(D) and regulations in 49 CFR Part 661.7.

Date _____

Signature _____

Company Name_____

Title _____

EXHIBIT H

DESIGNATION OF SUBCONTRACTORS AND DBE'S

All FIRST-TIER DBEs to be used must be listed on this form regardless of dollar value of each transaction.

To comply with the requirements of the California Subletting and Subcontracting Fair Practices Act (California Public Contract Code Section 4100 et seq.). Bidder shall list in Part I on this form the name and address of each Subcontractor to whom Bidder proposes to subcontract more than 1/2 of 1% of the Work, description of portion of work or services subcontracted, total dollar amount of the portions of the work or services subcontracted, whether the Subcontractor is a DBE, and the California contractor license number of the Subcontractor. An inadvertent error in listing a Subcontractor's California contractor license number may be corrected by Bidder within twenty four (24) hours after the Bid opening provided the corrected contractor's license corresponds to the submitted name and location for that Subcontractor. The above list of information shall be submitted with the Bid. Other information required in Part I herein may be submitted up to 24 hours after the designated time to submit the Bid.

In addition, in Part II of this form, list all first-tier DBEs not subject to the requirements of California Public Contract Code Section 4100.

Pursuant to Section 1725.5 and Section 1771.1 of the State Labor Code, all Contractors and Subcontractors must be registered with the California Department of Industrial Relations (DIR) in order to be qualified to bid on this Contract or to be listed as a Subcontractor. An inadvertent error in listing a Subcontractor who is not registered pursuant to Section 1725.5 in a Bid, may be corrected by the Bidder within twenty four (24) hours after the Bid opening if the Subcontractor registers and pays the penalty registration fee described in Section 1725.5 of the State Labor Code. Alternatively, the Subcontractor may be replaced with a registered Subcontractor pursuant to Section 4107 of the Public Contract Code.

Note that only Certified DBEs that are either located in the four counties of Alameda, Contra Costa, San Francisco and San Mateo (BART Market Area) or that have done business or attempted to do business in the BART Market Area within two years prior to the Contract advertisement date will be counted towards meeting the DBE goal.

To check the DBE status of a subcontractor, visit the following website:
http://www.dot.ca.gov/hq/bep/find_certified.htm
For the Bidders' convenience, the CUCP Uniform Certification Application Form package, for use by each business not currently certified under the CUCP as a DBE can be downloaded from the District's website, www.bart.gov, or obtained from the District's Office of Civil Rights at 16th Floor, 300 Lakeside Drive, Oakland, CA 94612, telephone number (510) 464-6100.

Attach additional copies of this form if more space is needed and paginate the forms (i.e., Page of)

Name and Address	DBE (Check if DBE) and Insert DBE Cert. No.	Description of Portion of Work or Services Subcontracted	Total Dollar Amount of Subcontracted Work or Services
I. All Subcontractors (first-tier DBEs, Non-of General Conditions Article C5.7.1			
Name:_____ Address:_____ _____ California Contractor License No._____ DIR Contractor Registration No. _____ Phone Number:_____ Age of Firm:_____ Annual Gross Receipts as of last Tax Year: $_____	**DBE Cert. No. _____**		
Name:_____ Address:_____ _____ California Contractor License No._____ DIR Contractor Registration No. _____ Phone Number:_____ Age of Firm:_____ Annual Gross Receipts as of last Tax Year: $_____	**DBE Cert. No. _____**		
Name:_____ Address:_____ _____ California Contractor License No._____ DIR Contractor Registration No. _____ Phone Number:_____ Age of Firm:_____ Annual Gross Receipts as of last Tax Year: $_____	**DBE Cert. No. _____**		

Name and Address	DBE (Check if DBE) and Insert DBE Cert. No.	Description of Portion of Work or Services Subcontracted	Total Dollar Amount of Subcontracted Work or Services
II. All Subcontractors (first-tier DBEs, Non-DBEs General Conditions Article GC5.7.1.			
Name:_____ Address:_____ _____ _____ DIR Contractor Registration No. _____ Phone Number:_____ Age of Firm:_____ Annual Gross Receipts as of last Tax Year: $_____	**DBE Cert. No.** _____		
Name:_____ Address:_____ _____ _____ DIR Contractor Registration No. _____ Phone Number:_____ Age of Firm:_____ Annual Gross Receipts as of last Tax Year: $_____	**DBE Cert. No.** _____		
Name:_____ Address: _____ _____ _____ DIR Contractor Registration No. _____ Phone Number:_____ Age of Firm:_____ Annual Gross Receipts as of last Tax Year: $_____	**DBE Cert. No.** _____		

Name and Address	DBE (Check if DBE) and Insert DBE Cert. No.	Description of Portion of Work or Services Subcontracted	Total Dollar Amount of Subcontracted Work or Services
All first-tier DBE and SBE SUPPLIERS:			
Name:_____ Address:_____ _____ _____ Phone Number:_____ Age of Firm:_____ Annual Gross Receipts as of last Tax Year: $_____	**DBE Cert. No.** _____		
Name:_____ Address:_____ _____ _____ Phone Number:_____ Age of Firm:_____ Annual Gross Receipts as of last Tax Year: $_____	**DBE Cert. No.** _____		
Name:_____ Address:_____ _____ Phone Number:_____ Age of Firm:_____ Annual Gross Receipts as of last Tax Year: $_____	**DBE Cert. No.** _____		

Name and Address	DBE (Check if DBE) and Insert DBE Cert. No	Description of Portion of Work or Services Subcontracted	Total Dollar Amount of Subcontracted Work or Services
IV. All first-tier DBE and SBE SUPPLIERS: Regular Dealers (60% credit) See Supplementary Conditions Article SC7.1.3D.4 for definition of Regular Dealer.			
Name:_____ Address:_____ _____ _____ Phone Number:_____ Age of Firm:_____ Annual Gross Receipts as of last Tax Year: $_____	**DBE Cert. No. _____**		
Name:_____ Address:_____ _____ _____ Phone Number:_____ Age of Firm:_____ Annual Gross Receipts as of last Tax Year: $_____	**DBE Cert. No. _____**		
Name:_____ Address:_____ _____ _____ Phone Number:_____ Age of Firm:_____ Annual Gross Receipts as of last Tax Year: $_____	**DBE Cert. No. _____**		

Name and Address	DBE (Check if DBE) and Insert DBE Cert. No	Description of Portion of Work or Services Subcontracted	Total Dollar Amount of Subcontracted Work or Services
V. All other first-tier DBEs and SBEs: See Supplementary Conditions Article SC7.1.3.D.5 for Available Credit.			
Name:_____ _____ Address:_____ _____ Phone Number:_____ Age of Firm:_____ Annual Gross Receipts as of last Tax Year: $_____	**DBE Cert. No. _____**		
Name:_____ _____ Address:_____ _____ Phone Number:_____ Age of Firm:_____ Annual Gross Receipts as of last Tax Year: $_____	**DBE Cert. No. _____**		
Name:_____ _____ Address:_____ _____ Phone Number:_____ Age of Firm:_____ Annual Gross Receipts as of last Tax Year: $_____	**DBE Cert. No. _____**		

BIDDER'S DBE QUESTIONNAIRE

Is Bidder a DBE? ____YES ___NO

CUCP Certified? ____YES ___NO

If YES, enter Certification Date:_____

Is Bidder a joint venture with DBE partner? [1]

____YES ___NO

If YES, are Joint Venture Forms attached? ____YES ___NO

Percentage (%) of DBE participation in joint venture: _____%

Age of Firm: _____

Annual Gross Receipts as of last Tax Year: $ _____

[1] If the Bidder is a joint venture, only the portion of the total dollar value of the Contract equal to the distinct, clearly defined portion of the work that is performed solely by the DBE'S own forces can be counted toward DBE participation. If the work is not clearly delineated between the DBE and the joint venture partner, only the portion or the work equal to the DBE's percentage ownership interest in the joint venture will be counted.

EXHIBIT I

Non Residence Certification

TO THE SAN FRANCISCO BAY AREA RAPID TRANSIT DISTRICT

I_____on behalf of_____certify as follows:
Insert Name of DBE Firm

a. I am a certified DBE listed in the California Unified Certification Program (CUCP) database; and

b. I am located outside of the four counties of Alameda, Contra Costa, San Francisco and San Mateo (BART Market Area); and

c. I have done business or attempted to do business in the BART Market Area within two years prior to the Contract advertisement date.

I declare under penalty of perjury, under the laws of the State of California, that the foregoing is true and correct, is within my personal knowledge and if called upon to testify, I could testify competently thereto.

Executed on_____at _____

_____
Signature of DBE Firm Representative

_____
Title

EXHIBIT J

INSURANCE REQUIREMENT
MTCP, OPA Exhibit G, HCD Exhibit E, BART

Contractor must meet the provisions of the insurance requirements for HCD, The City of Oakland, BART and MTCP per the attached documents:

- MTCP Insurance Requirements , 2 pages
- BART DCA Insurance Requirements, 5 pages
- HCD Insurance Requirements, 7 pages
- OPA Insurance Requirements, 3 pages

MacArthur Transit Community Partners

Insurance Requirements

I. Insurance requirements during construction

Contractor shall obtain insurance coverage that meets the requirements from BART, the City of Oakland, and the State of California Department of Housing and Community Development, together with the requirements set forth herein, all of which have been incorporated in this Exhibit to the Contract Documents, and maintain such coverage in full force and effect during Project construction. Before issuance of a notice to proceed, Contractor shall deliver certificate(s) of insurance, or a binder followed within 30 days by a certificate of insurance, evidencing the required coverage.

II. Additional Specific Requirements

Contractor's products and completed operations coverage shall be maintained for at least two (2) years after completion.

III. General requirements

The aforementioned insurance shall be endorsed and have all the following conditions:

1. The Contractor shall ensure that MacArthur Transit Community Partners, LLC, BRIDGE Housing Corporation, BRIDGE Economic Development Corporation are named as additional insureds in its comprehensive commercial general liability, professional liability, and automobile liability policies. Contractor shall submit to Agency the ACORD Insurance Certificate evidencing such insurance. All liability policies shall also be endorsed to state that the coverage shall be primary and any liability coverage maintained by the Owner shall be considered excess, and a copy of such endorsement shall also be provide to the Owner

2. The Contractor shall ensure that MacArthur Transit Community Partners, LLC is named as Loss Payee in the builders' risk insurance and property insurance. The Contractor shall provide an insurance certificate as proof meeting this requirement.

3. The Contractor shall provide 30-day prior written notice of cancellation, termination or material change in coverage.

4. Certificate holder is to be the same person and address as indicated in the "Notices" section of this Agreement.

5. The Contractor shall be wholly responsible for the safe storage and protection of all materials until incorporation in the Work and issuance of the Architect's final certificate, except any materials that may be covered by insurance as set forth in

the Addendum. The Contractor shall further be wholly responsible for the safe storage and protection of all machinery and equipment during the entire construction period and until removal from the premises at the completion of the entire Project

6. Liability Insurance shall be written to cover all claims incurred during the term of this Contract or out of any work performed pursuant to the Contract, regardless of when such claim shall be first made. Should any required liability insurance be written on a claims-made basis, Contractor shall continue to provide such evidence of coverage for four years after completion and acceptance of the Project.

5.02 Insurance. On or before execution of this Agreement and at all times during the term of this Agreement, Developer and its contractors and consultants, at their sole cost and expense, shall maintain the following insurance coverages, each naming BART and any other entity as required by this Agreement, as an additional insured:

(a) Evidence Required. At or before execution of this Agreement and at such times as BART may request, Developer and its contractors and consultants shall provide BART with certificates of insurance executed by an authorized representative of the insurers(s) evidencing that the insurance complies with this Section 5.02; provided, however, only certificates of insurance for the general liability and professional liability certificates will be required for execution of this Agreement. All other required insurance coverage will be provided upon issuance of a Permit to Enter. The certificates shall reference this Agreement and any subsequent access permit numbers assigned for work associated with this Agreement. Copies of all endorsements shall be attached to and form part of the certificates of insurance.

(b) Notice of Cancellation, Renewal, Reduction or Material Change in Coverage. All policies shall be endorsed to provide BART with not less than thirty (30) days notice of cancellation, reduction or material change in coverage. If the carrier cannot provide such notice, BART will accept notice from the insured on behalf of its carrier(s). Notice shall be sent to Department Manager of Insurance, San Francisco Bay Area Rapid Transit District, P.O. Box 12688. Oakland, CA 94604-2688. Developer shall annually submit to BART's Department Manager, Insurance, certifications confirming that the insurance required has been renewed and continues in place.

(c) Qualifying Insurers. All policies required by this Section 5.02 shall be issued by companies that hold a current policy holder alphabetic and financial sized category of not less than A-XII according to Best's Insurance Reports.

(d) Insurance Required.

(i) Commercial general liability insurance for bodily injury (including death) and property damage that provides limits of not less than Ten Million Dollars ($10,000,000) per occurrence and Ten Million Dollars ($10,000,000) annual aggregate as applicable.

A. Coverage shall include:

1. Premises and operations and mobile equipment;

2. Products/completed operations;

3. Broad form property damage (including completed operations);

4. Blanket contractual liability coverage;

5. Personal injury liability;

6. Cross liability and severability of interests clauses providing that the insurance applies separately to each insured except with respect to the limits of liability;

7. Independent Contractor's Liability; and

8. Explosion, collapse and underground hazards.

B. Such insurance shall include the following endorsements, copies of which shall be provided to BART:

1. Inclusion of BART, its directors, officers, representatives, agents and employees and any other entity, as required by this Agreement, and their respective directors, officers, trustees, representatives, agents and employees as additional insureds as respects work or operations performed under this Agreement; and

2. Stipulation that the insurance is primary insurance and that no insurance or self insurance of BART will be called upon to contribute to a loss.

C. For all permits and agreements involving construction or demolition work within 50 feet, vertically or horizontally, of the BART trackway and affecting any railroad bridge or trestle, tracks, road-beds, tunnel, underpass or crossing, the General Liability Insurance must not exclude coverage therein. In cases where this coverage is excluded from the policy, the following policy coverage is required:

1. Railroad Protective Liability for bodily injury (including death), property damage, and physical damage, including loss of use thereof, to railroad property with limits of not less than Two Million Dollars ($2,000,000) per occurrence and Six Million Dollars ($6,000,000) in the aggregate annually applicable to all operations of Developer and its contractor(s) and subcontractors within fifty (50) feet vertically or horizontally of BART's trackway. BART shall have the right to approve of the policy wording. The named insured shall be San Francisco Bay Area Rapid Transit District. Prior to commencing work or entering BART property, Developer shall file the original copy of the policy with BART's Department Manager, Insurance. This coverage shall be maintained for the term of all permits and agreements involving construction or demolition work within 50 feet, vertically or horizontally, of the BART trackway.

(ii) Automobile. Automobile liability insurance for bodily injury (including death) and property damage that provides a coverage limit of at least One Million Dollars ($1,000,000) combined single limit per occurrence applicable to all owned, non-owned, and hired vehicles.

A. With respect to the removal and transport of hazardous material or hazard-containing material, the policy shall include:

1. Coverage for the accidental release of hazardous waste defined in California Heath and Safety Code (H & S) Section 25117 and listed in Title 22

California Code of Regulations Section 66260.10 and consequential containment, cleanup, disposal and penalties associated therewith.

2. Pollution Liability - Broadened coverage for covered autos which includes "covered pollution costs or expenses," which mean any cost or expense arising out of:

(x) any request, demand or order; or

(y) any claim or suit by or on behalf of a governmental authority demanding that the insured or others test for, monitor, clean-up, remove, contain, treat, detoxify, or neutralize, or in any way respond to, or assess the effects of pollutants.

(iii) Statutory Workers' Compensation Insurance and Employers' Liability for not less than One Million Dollars ($1,000,000) per occurrence applicable to Employer's Liability coverage for all employees engaged in services or operations under this Agreement. The policy shall include broad form all-states/other states coverage. Coverage shall be specifically endorsed to include the insurer's waiver of subrogation in favor of BART, its directors, officers, representative, agents and employees and any other entity, as required by Agreement, and their respective directors, officers, trustees, representatives, agents and employees, a copy of which shall be provided to BART. Should any such work be subcontracted, Developer shall require each subcontractor of any tier similarly to comply with this Section 5.02, all in strict compliance with federal and state laws.

(iv) Contractors Pollution Liability Insurance. Contractor Pollution Liability Insurance (CPL) for bodily injury (including death), property damage and remediation that provides limits of not less than Three Million Dollars ($3,000,000) per occurrence if Developer or any of its contractors or subcontractors perform asbestos or other toxic or hazardous materials remediation, removal, abatement, storage, transportation or disposal work including, without limitation, related demolition work.

A. Such policies shall be for a term not less than one (1) year on an "occurrence" basis, and any aggregate applicable to such policies shall be dedicated to work performed by Developer and/or its contractor and subcontractors on behalf of BART. In addition, such policies shall include, without limitation, and as applicable:

1. Bodily injury and defense coverage for asbestos (if there is exposure);

2. Bodily injury and defense coverage for lead (if there is exposure);

3. Bodily injury and defense coverage for microbial matter (if there is exposure);

4. Property damage, to include natural resource damage claims;

5. a statement that such insurance is primary and over any surety contracts or bonds covering the Work if any;

6. coverage for products brought onto the BART Garage Parcel, Plaza and/or TI Improvement Area where operations are being performed;

7. Inclusion of BART and its directors, officers, representatives, agents, and employees as additional insureds as respects work or operations performed under this Agreement;

8. Coverage for pollution incidents related to transported cargo/waste to and from job site [See section 5.02(d)(ii)(A)(2)];

9. Coverage for claims for bodily injury, property damage or remediation costs related to pollution conditions at disposal sites that have received waste transported from the BART Garage Parcel, Plaza and/or TI Improvement Area; and

10. A waiver of subrogation provision against BART and its directors, officers, representatives, agents and employees.

(v) Builders Risk (Course of Construction) Insurance. Builders Risk (Course of Construction) Insurance provided on a Causes of Loss –Special Form policy, excluding earthquake, for the full replacement cost of materials, supplies, all property to be incorporated into the finished work, and completed work in an amount not less than the full completed value of the covered structure or the replacement value of alterations or additions. BART shall be named as a loss payee, and losses will be payable to both Developer and BART, as their interests may appear.

(vi) Professional Liability. Professional Liability Insurance for damages arising out of consultants' acts, errors or omissions. The policy shall provide a coverage limit of not less than One Million Dollars ($1,000,000) per claim/aggregate as respects consultant's services under this Agreement. Such insurance shall be maintained for a period of not less than two (2) years following completion of services.

(vii) Garage Keepers Legal Liability Insurance. Garage keepers legal liability insurance (garage keepers coverage), comprehensive and collision causes of loss, with limits not less than Three Million Dollars ($3,000,000) each occurrence for all permits and agreements involving assisted and/or valet parking services on BART property and for the duration of such services.

(e) Special Provisions.

(i) The foregoing requirements as to the types and limits of insurance coverage to be maintained by Developer, and any approval of said insurance by BART or its insurance consultants, are not intended to and shall not in any manner limit or qualify the liabilities and obligations otherwise assumed by Developer pursuant to this Agreement, including but not limited to the provisions concerning indemnification.

(ii) BART acknowledges that some insurance requirements contained in this Section 5.02 may be fulfilled by a funded self-insurance program of Developer. However, this shall not in any way limit liabilities assumed by Developer under this Agreement. Any self-insurance program must be approved in writing by BART in advance.

(iii) Should any of the work under this Agreement be subcontracted, Developer may impose these requirements upon each of its subcontractors/subconsultants of any tier at its own discretion. If subcontractor/subconsultant coverage is provided on Developer's behalf as primary coverage, this provision shall not apply.

(iv) BART reserves the right to terminate this Agreement in the event of material noncompliance with the insurance requirements of this Section 5.02.

(v) The required policy limits required under this Agreement may be satisfied by a combination of primary and excess policies.

(f) Waiver of Subrogation. To the extent permitted by law and without affecting the coverage provided by insurance required to be maintained hereunder, Developer and BART each waive any right to recover against the other (i) damages for injury or death of persons, (ii) damage to property, (iii) damage to the Phase I Improvements or any part thereof, or (iv) claims arising by reason of any of the foregoing, to the amount and extent that such damages and/or claims are covered (and only to the extent of such coverage) by insurance actually carried by either Developer or its Contractors or by BART. This provision is intended to restrict each party (as permitted by law) to recovery against insurance carriers to the extent of such coverage, and waive fully, and for the benefit of each, any rights and/or claims that might give rise to a right of subrogation in any insurance carrier.

5.03 Fair Employment Opportunity.

Developer and its contractors, subcontractors and materialpersons, including the General Contractor, and their successors and assigns shall not discriminate against any employee or applicant for employment in connection with the construction of the Phase I Improvements because of race, color, religion, ethnic group identification, sex, sexual preference, marital status, ancestry or national origin. Each of the following activities shall be conducted in a non-discriminatory manner: hiring; upgrading; demotion and transfers; recruitment and recruitment advertising; layoff and termination; rate of pay and other forms of compensation; and selection for training including apprenticeship.

5.04 Liens and Claims.

(a) Developer shall use its best efforts to not permit any mechanic's, laborer's or materialperson's lien, stop notice or any security interest at any time to be filed against all or part of the Station, the Other BART Property, the BART Garage Parcel, the Plaza, the Phase I Improvements or any other property owned by BART or any improvements thereon or interest therein, or any lien of any nature to be filed or permitted to be filed against the assets of or funds appropriated to BART or the Agency (including the Prop 1C Funds and the Grant Funds) arising out of any Construction by Developer. If such lien notice or interest is filed, Developer shall promptly discharge it. If not promptly discharged, BART thereafter shall have the right to

HCD Exhibit "E" to Disbursement Agreement

Insurance Requirements

These insurance requirements govern insurance coverage on Projects improved using infrastructure grant funding from the Department's Infill Infrastructure Grant Program. The Department reserves the right to revise and vary these requirements based on, among other items, the availability of coverage, current insurance industry standards and concerns specific to the insured property.

Recipients of Department infrastructure grants are responsible for carrying the minimum required insurance coverage according to this Disbursement Agreement. Insurance coverage meeting the following requirements will be deemed by the Department to be in compliance with this Disbursement Agreement.

Submit a certificate of insurance (or other evidence) that acknowledges the Department's security interest and has appropriate coverage in force for property and liability exposures as follows:

1. GENERAL REQUIREMENTS:

(a) Copy of its commercial general liability policy and its excess policy or binder until such time as a policy is available, including the declarations page, applicable endorsements, riders, and other modifications in effect at the time of contract execution. Standard ISO form No. CG 0001 or similar exclusions are allowed if not inconsistent with Section 2, "Indemnification and Insurance." Allowance of additional exclusions is at the discretion of the Department.

(b) Certificate of insurance showing all other required coverages. Certificates of insurance, as evidence of required insurance for the auto liability and any other required policy, shall set forth deductible amounts applicable to each policy and all exclusions that are added by endorsement to each policy. The evidence of insurance shall provide that no cancellation, lapse, or reduction of coverage will occur without 10 days prior written notice to the Department.

(c) A declaration under the penalty of perjury by a certified public accountant certifying the accountant has applied Generally Accepted Accounting Principles (GAAP) guidelines confirming the Recipient has sufficient funds and resources to cover any self-insured retentions if the self-insured retention is $50,000 or higher.

(d) If the Recipient uses any form of self-insurance for workers compensation in lieu of an insurance policy, it shall submit a certificate of consent to self-insure in accordance with the provisions of Section 3700 of the Labor Code.

2. INDEMNIFICATION AND INSURANCE:

The Contractor's obligations regarding indemnification of the State of California and the requirements for insurance shall conform to the provisions in Section 2(a), "Indemnification," and Section 2(b), "Insurance," of Section 2.

(a) INDEMNIIFICATION:

(1) The Contractor shall defend, indemnify, and save harmless the State, including its officers, employees, and agents (excluding agents who are design professionals) from any and all claims, demands, causes of action, damages, costs, expenses, actual attorneys' fees, losses or liabilities, in law or in equity arising out of or in connection with the Contractor's performance of this contract for:

(2) Bodily injury including, but not limited to, bodily injury, sickness or disease, emotional injury or death to persons, including, but not limited to, the public, any employees or agents of the Contractor, the State, or any other contractor; and

(3) Damage to property of anyone including loss of use thereof; caused or alleged to be caused in whole or in part by any negligent or otherwise legally actionable act or omission of the Contractor or anyone directly or indirectly employed by the Contractor or anyone for whose acts the Contractor may be liable.

(4) Except as otherwise provided by law, these requirements apply regardless of the existence or degree of fault of the State. The Contractor is not obligated to indemnify the State for Claims arising from conduct delineated in Civil Code Section 2782 and to Claims arising from any defective or substandard condition of the highway that existed at or before the start of work, unless this condition has been changed by the work or the scope of the work requires the Contractor to maintain existing highway facilities and the Claim arises from the Contractor's failure to maintain. The Contractor's defense and indemnity obligation shall extend to Claims arising after the work is completed and accepted if the Claims are directly related to alleged acts or omissions by the Contractor that occurred during the course of the work. State inspection is not a waiver of full compliance with these requirements.

(5) The Contractor's obligation to defend and indemnify shall not be excused because of the Contractor's inability to evaluate liability or because the Contractor evaluates liability and determine that the Contractor is not liable. The Contractor shall respond within 30 days to the tender of any Claim for

defense and indemnity by the State, unless this time has been extended by the State. If the Contractor fails to accept or reject a tender of defense and indemnity within 30 days, in addition to any other remedy authorized by law, the Department may withhold such funds the State reasonably considers necessary for its defense and indemnity until disposition has been made of the Claim or until the Contractor accepts or rejects the tender of defense, whichever occurs first.

(6) With respect to third-party claims against the Contractor, the Contractor waives all rights of any type to express or implied indemnity against the State, its officers, employees, or agents (excluding agents who are design professionals).

(7) Nothing in the Contract is intended to establish a standard of care owed to any member of the public or to extend to the public the status of a third-party beneficiary for any of these indemnification specifications.

(b) INSURANCE

(1) Nothing in the contract is intended to establish a standard of care owed to any member of the public or to extend to the public the status of a third-party beneficiary for any of these insurance specifications.

(c) CASUALTY INSURANCE

(1) The Contractor shall procure and maintain insurance on all of its operations with companies acceptable to the State as follows:

(A) The Contractor shall keep all insurance in full force and effect from the beginning of the work through contract acceptance.

(B) All insurance shall be with an insurance company with a rating from A.M. Best Financial Strength Rating of A- or better and a Financial Size Category of VII or better.

(C) The Contractor shall maintain completed operations coverage with a carrier acceptable to the State through the expiration of the patent deficiency in construction statute of repose set forth in Code of Civil Procedure Section 337.1.

(d) WORKERS' COMPENSATION AND EMPLOYERS' LIABILITY INSURANCE

(1) In accordance with Labor Code Section 1860, the Contractor shall secure the payment of worker's compensation in accordance with Labor Code Section 3700.

(2) In accordance with Labor Code Section 1861, the Contractor shall submit to the Department the following certification before performing the work:

(A) I am aware of the provisions of Section 3700 of the Labor Code which require every employer to be insured against liability for workers' compensation or to undertake self-insurance in accordance with the provisions of that code, and I will comply with such provisions before commencing the performance of the work of this contract.

(3) Contract execution constitutes certification submittal.

(4) The Contractor shall provide Employer's Liability Insurance in amounts not less than:

(A) $1,000,000 for each accident for bodily injury by accident
(B) $1,000,000 policy limit for bodily injury by disease
(C) $1,000,000 for each employee for bodily injury by disease

(5) If there is an exposure of injury to the Contractor's employees under the U.S. Longshoremen's and Harbor Workers' Compensation Act, the Jones Act, or under laws, regulations, or statutes applicable to maritime employees, coverage shall be included for such injuries or claims.

(e) GENERAL LIABILITY INSURANCE

(1) The Contractor shall carry General Liability and Umbrella or Excess Liability Insurance covering all operations by or on behalf of the Contractor providing insurance for bodily injury liability and property damage liability for the following limits and including coverage for:

(A) Premises, operations, and mobile equipment
(B) Products and completed operations
(C) Broad form property damage (including completed operations)
(D) Explosion, collapse, and underground hazards
(E) Personal injury
(F) Contractual liability

(2) The Contractor shall not require certified Small Business subcontractors to carry Liability Insurance that exceeds the limits in Section 2(f)(1), "Liability Limits/Additional Insureds," of these specifications. The maximum

required Liability Insurance limits in Section 2(f)(1), "Liability Limits/Additional Insureds," of these specifications shall apply to certified Small Business subcontractors for work performed on the project, regardless of tier. The provisions of Section 2(f)(1), "Liability Limits/Additional Insureds," shall be included in all subcontracts for all tiers.

(f) LIABILITY LIMITS/ADDITIONAL INSUREDS

(1) The limits of liability shall be at least the amounts shown in the following table:

Construction Contract Amount [4]	For Each Occurrence [1]	Aggregate for Products/ Completed Operation	General Aggregate[2]	Umbrella or Excess Liability[3]
≤$1,000,000	$1,000,000	$2,000,000	$2,000,000	$5,000,000
>$1,000,000 ≤$5,000,000	$1,000,000	$2,000,000	$2,000;000	$10,000,000
>$5,000,000 ≤$25,000,000	$2,000,000	$2,000,000	$4,000,000	$15,000,000
>$25,000,000	$2,000,000	$2,000,000	$4,000,000	$25,000,000

1. Combined single limit for bodily injury and property damage.
2. This limit shall apply separately to the Contractor's work under this contract.
3. The umbrella or excess policy shall contain a clause stating that it takes effect (drops down) in the event the primary limits are impaired or exhausted.
4. "Construction Contract Amount" is the total amount of the construction contract all or a portion of which is funded with IIG funds.

(2) The State, including its officers, directors, agents (excluding agents who are design professionals), and employees, shall be named as additional insureds under the General Liability and Umbrella Liability Policies with respect to liability arising out of or connected with work or operations performed by or on behalf of the Contractor under this contract. Coverage for such additional insureds does not extend to liability:

(A) Arising from any defective or substandard condition of the roadway which existed at or before the time the Contractor started work, unless such condition has been changed by the work or the scope of the work requires the Contractor to maintain existing roadway facilities and the claim arises from the Contractor's failure to maintain;

(B) For claims occurring after the work is completed and accepted unless these claims are directly related to alleged acts or omissions of the

Contractor that occurred during the course of the work; or

(C) To the extent prohibited by Insurance Code Section 11580.04

(3) Additional insured coverage shall be provided by a policy provision or by an endorsement providing coverage at least as broad as Additional Insured (Form B) endorsement form CG 2010, as published by the Insurance Services Office (ISO), or other form designated by the Department.

(g) CONTRACTOR'S INSURANCE POLICY IS PRIMARY

The policy shall stipulate that the insurance afforded the additional insureds applies as primary insurance. Any other insurance or self-insurance maintained by the State is excess only and shall not be called upon to contribute with this insurance.

(h) AUTOMOBILE LIABILITY INSURANCE

The Contractor shall carry automobile liability insurance, including coverage for all owned, hired, and nonowned automobiles. The primary limits of liability shall be not less than $1,000,000 combined single limit each accident for bodily injury and property damage. The umbrella or excess liability coverage required under Section 2 (f)(1) also applies to automobile liability.

(i) POLICY FORMS, ENDORSEMENTS, AND CERTIFICATES

The Contractor shall provide its General Liability Insurance under Commercial General Liability policy form No. CG0001 as published by the Insurance Services Office (ISO) or under a policy form at least as broad as policy form No. CG0001.

(j) DEDUCTIBLES

The State may expressly allow deductible clauses, which it does not consider excessive, overly broad, or harmful to the interests of the State. Regardless of the allowance of exclusions or deductions by the State, the Contractor is responsible for any deductible amount and shall warrant that the coverage provided to the State is in accordance with Section 2(b), "Insurance."

(k) ENFORCEMENT

(1) The Department may assure the Contractor's compliance with its insurance obligations. Ten days before an insurance policy lapses or is canceled during the contract period, the Contractor shall submit to the Department evidence of renewal or replacement of the policy.

(2) If the Contractor fails to maintain any required insurance coverage, the Department may maintain this coverage and withhold or charge the expense to the Contractor or terminate the Contractor's control of the work.

(3) The Contractor is not relieved of its duties and responsibilities to indemnify, defend, and hold harmless the State, its officers, agents, and employees by the Department's acceptance of insurance policies and certificates.

(4) Minimum insurance coverage amounts do not relieve the Contractor for liability in excess of such coverage, nor do they preclude the State from taking other actions available to it, including the withholding of funds under this contract.

OPA EXHIBIT G
(MacArthur Transit Village)

Insurance Requirements

I. Insurance requirements during construction

The Developer shall ensure that the general contractor for the Project obtains the following insurance coverage, and maintain such coverage in full force and effect during Project construction. Before issuance of a notice to proceed for any phase of the Project, the Developer shall deliver to the Agency certificate(s) of insurance, or a binder followed within 30 days by a certificate of insurance, evidencing the required coverage.

- **COMPREHENSIVE GENERAL LIABILITY AND VEHICLE INSURANCE.**

- Minimum coverage: Bodily injury limits of $5,000,000 for each occurrence; property damage limits of $5,000,000 for each occurrence.

- Policies shall include, at a minimum, but need not be limited to, coverages for bodily injury, property damage, personal injury, broad form property damage, premises and operations, severability of interest, products and completed operations, contractual liability, independent contractors and XCU.

- **BROAD FORM PROPERTY DAMAGE (BUILDERS RISK INSURANCE).**

- Minimum coverage: 100% of replacement cost.

- Deductible: $250,000 maximum deductible per occurrence.

- Property covered: Structure and all insurable items within the Property (including landscaping and common areas).

- Perils covered: All risk, or fire and hazardous installation, vandalism and malicious mischief.

- Builders' risk installation floater for coverage of the contractor's labor, materials and equipment to be used for completion of work performed under the construction contract.

- **WORKERS' COMPENSATION.**

- Workers' Compensation as required by the California Labor Code for all persons employed in connection with this Project.

- Employer's Liability insurance with a limit of no less than $1,000,000 combined single limit per occurrence.

- **AUTOMOBILE INSURANCE (if not part of CGL).**

- Minimum coverage: Bodily injury limits of $1,000,000 for each person and $1,000,000 for each accident or occurrence; property damage liability limits of $500,000 for each accident or occurrence

II. Insurance requirements for professional services providers

The Developer shall ensure that any architect, design professional, engineer, consultant, and any other professional services provider that the Developer contracts with to perform work on the Project carries professional liability insurance for errors and omissions with a limit of no less than $1,000,000. The Agency may in its discretion waive this requirement on a case-by-case basis. Before any such professional begins work on the Project, the Developer shall deliver to the Agency certificate(s) of insurance, or a binder followed within 30 days by a certificate of insurance, evidencing the required coverage.

III. General requirements

The aforementioned insurance shall be endorsed and have all the following conditions:

- **Additional Insured:** The Developer shall ensure that the Redevelopment Agency of the City of Oakland, the City of Oakland, their respective Council members, directors, officers, agents and employees are named as additional insureds in its comprehensive commercial general liability, professional liability, and automobile liability policies. Developer shall submit to Agency the ACORD Insurance Certificate evidencing such insurance.

- **Loss Payee:** The Developer shall ensure that the Redevelopment Agency of the City of Oakland, the City of Oakland, their respective Council members, directors, officers, agents and employees are named as Loss Payee in the builders' risk insurance and property insurance. The Developer shall provide an insurance certificate as proof meeting this requirement.

- **Cancellation Notice:** 30-day prior written notice of cancellation, termination or material change in coverage.

- Certificate holder is to be the same person and address as indicated in the "Notices" section of this Agreement.

- Insurer shall carry a Best Rating of B+ or greater.

In the case of the breach of any of the insurance provisions of this Agreement, the Agency may, at the Agency's option, take out and maintain at the expense of the Developer such insurance in the name of Developer as is required pursuant to this Agreement.

All endorsements, certificates, forms, coverage and limits of liability referred to herein shall have the meaning given such terms by the Insurance Services Office (ISO) as of the date of this Agreement.

The Developer or its general contractor shall include all subcontractors as insureds under its policies or shall maintain separate certificates and endorsements for each subcontractor. All coverages for subcontractors shall be subject to all the requirements stated herein. The Agency reserves the right to perform an insurance audit during the course of the Project to verify compliance with requirements.

Any deductible or self-insured retentions greater than $250,000 must be declared to and approved by the Agency. At the option of the Agency, either the insurer shall reduce or eliminate such deductible or self-insured retentions as respects the Agency, the City and their respective Council members, directors, officers, agents, employees and volunteers; or the Developer shall provide a financial guarantee satisfactory to the Agency guaranteeing payment of losses and related investigations, claim administration and defense expenses.

Developer may obtain all or any portion of the foregoing coverages under an OCIP or other Project policy or under any blanket coverage maintained by Developer or its contractors.

EXHIBIT K

PROJECT LABOR AGREEMENT

Contractor must meet the provisions of the Project Labor Agreement per the attached document dated July 6th, 2009.

- Project Labor Agreement, 25 Pages

PROJECT LABOR AGREEMENT

Preamble

This Project Labor Agreement ("Agreement") is entered into the 6th day of July, 2009, between MacArthur Transit Community Partners, LLC ("Developer") for itself and all subsequent Developers (referred to herein as "Subsequent Developers") and General Contractors and subcontractors who become bound hereto (collectively referred to herein as "Contractors") and those Building Trade Unions signatory hereto and the Building and Construction Trades Council of Alameda County, AFL-CIO ("BTC"), (collectively referred hereto as "Unions").

This Agreement uses the following terms as defined below:

The term "***Construction Work***" means, and is limited to: On-site preparation and new on-site construction work (under the recognized and accepted customary State of California definition as defined by the State of California, Department of Industrial Relations, and by the State of California Division of Labor Statistics and Research).

The term "***Contractor" (or "Contractors")*** means all general contractors and subcontractors of whatever tier that are signatory hereto or sign the assent form attached hereto as Attachment "A" and incorporated by this reference ("Letter of Assent").

The term ***"Subsequent Developer"*** means any other developer to whom any portion of the project is transferred by the Developer. It is understood that the intent of the Developer is to convey in segments various portions of the Project (each such portion of the Project being referred to herein as a ***"Phase"***) upon completion of the infrastructure and the individual building pads on which such Subsequent Developers will perform Construction Work for and on their own account with respect to the Phase so acquired. If and when a Subsequent Developer becomes signatory to this Agreement, the term "Developer" shall be understood to apply to the Subsequent Developer wherever the context of this Agreement so requires.

The term "***Subcontractor***" means any person or entity performing Construction Work on the Project under contract with the General Contractor or any of the General Contractor's Subcontractors.

The term "***General Contractor***" means any person or entity performing Construction Work on the Project under direct contract with the Owner.

The term "***Project***" means the MacArthur BART Station Development Project to be located on the property generally between West MacArthur Boulevard and 40th Street and between Telegraph Avenue and Highway 24 in the City of Oakland, California, as shown on the diagram attached hereto as Attachment B, which property is approximately 7.76 acres, and is the situs of work funded in part by the Redevelopment Agency of the City of Oakland. The parties recognize that the Developer is assembling various parcels of land on which the Project, or portions thereof, will be built. Therefore, this Agreement will become effective if and when the Developer acquires title to land on which the Project will be built, and will apply only to those parcels which are acquired by the Developer.

The Unions, Developer and all Subsequent Developers and Contractors agree or will agree to abide by the terms and conditions contained in this Agreement, including the referenced Schedule "A" agreements, as applicable, for each particular type of Construction Work performed on the Project, except to the extent excluded herein. In the event that the Department of Industrial Relations of the State of California issues or has issued prevailing wage rates for any craft applicable to residential construction or other types of construction than general construction in Alameda County, which construction form is being or will be used on the Project, said rates will be applicable upon their effective date to all residential or other type of Construction Work of such craft performed on the Project, and the Schedule "A" agreements for said craft(s) shall be deemed modified so as to include such rates for all residential or other type of Construction Work on the Project from and after the effective date of such prevailing wage rates, where such work is also utilized and addressed specifically in an Agreement of the effected Craft for the City of Oakland and for that specific type of work. Taken together this Agreement and the Schedule "A" agreements constitute the complete understanding of the Parties.

It is agreed that all Contractors who perform Construction Work on the Project (as those terms are defined above) must be bound to, or agree to be bound to the applicable Schedule "A" agreements (attached hereto).

The General Contractor will require all Contractors and Subcontractors who have collective bargaining relationships with a Union and who are awarded or are performing Construction Work on the Project, to become signatories to this Agreement, and will not allow any such Contractors or Subcontractors to perform Construction Work with a contract or subcontract amount greater than $100,000, as increased in accordance with the provisions of this paragraph below ("excluded work") unless such Contractors or Subcontractors become signatory to this Agreement by signing a Letter of Assent. The figure of $100,000 will be adjusted effective January 1 of each year of this Agreement by the percentage increase in the Construction Cost Index ("CCI-SF") for the City of San Francisco, as reported and published by the Engineering News Record ("ENR"), based on the cost for the month of December immediately preceding such January 1 as compared to the previous December. Any increase in the CCI-SF as so reported will apply to the excluded work under this paragraph and any tenant improvement work not yet begun. In the event the CCI-SF for any December is subsequently adjusted by ENR, the adjustment will be applied to the applicable adjustment for work not yet begun. In the event ENR discontinues reporting of the CCI-SF the parties will meet to determine an alternative measurement for increased costs of construction. The sum total of all such "excluded work" for any Phase of the Project shall not exceed 10% of the cost of the final contract awards for the Construction Work for such Phase.

Contractors or subcontractors with "excluded work" shall not be subject to the terms of this Agreement. This exclusion shall be used only when there are fewer than three signatory contractors who are qualified and willing to provide a bid for the scope of work, and who are registered with the City of Oakland as "Small Local Business Enterprises" ("SLBE") under the City of Oakland Local and Small Local for Profit and Not for Profit Business Enterprise Program. This exclusion is separate and apart from the three bidder minimum requirements of Article IV, Section 2, (h) and that three bidder minimum procedure may not be used to determine whether this exclusion is available. The Developer or Subsequent Developer and the Contractors shall not engage in bid-splitting (issuing multiple contracts to the same Contractor for the same work) in order to evade the other requirements of this PLA. No more than twenty (20) percent of the overall exclusion may be used to impact any single craft. Affiliated Unions of the District Council of Painters and Allied Trades, #16 shall be viewed as a single craft for

purposes of this twenty (20) percent exclusion. The General Contractor shall give notice of bid solicitations to the Building Trades Council, 8400 Enterprise Way, #205, Oakland, CA 94621, at or about the time they are sent to contractors or at least two weeks prior to the deadline for receipts of bids. At the time the General Contractor uses this exclusion, the General Contractor must give written notice to the BTC within three (3) working days of awarding the contract that the exclusion is being used, which notice must include the identity of the Contractor, the amount of the contract and the Craft affected by the contract.

The 10% percent limit referred to above is to allow the General Contractor to comply with the City of Oakland's requirement that the General Contractor subcontract not less than 10% of the dollar amount of the contract to Small Local Business Enterprises on the Project. The General Contractor will make good faith efforts to utilize only Small Local Business Enterprises ("SLBEs") who are signatory to the appropriate Schedule "A" collective bargaining agreement. However, if there are not a sufficient number of qualified SLBE's, who are signatory to a Schedule "A" collective bargaining agreement, available to meet the minimum SLBE subcontract requirements of the City of Oakland, the General Contractor shall give the BTC at least seven (7) calendar days written notice of the lack of available qualified signatory SLBE's. For purposes of this Article the term "qualified" shall refer to a licensed, financially qualified SLBE with experience in the type of work required, capable of meeting the job schedule who has submitted a commercially reasonable bid.

ARTICLE I – Purpose

The parties to this Agreement acknowledge that the construction of the Project as defined herein is important to the development of MacArthur BART Station Development Project (the "Property"). The parties recognize the need for the timely completion of the Project without interruption or delay. This Agreement is intended to enhance this cooperative effort through the establishment of a framework for labor-management cooperation and stability.

The Contractors and the Unions agree that the timely construction of this Project will require substantial numbers of employees from construction and supporting crafts possessing skills and qualifications that are vital to its completion. They will work together to furnish skilled, efficient craftworkers for the construction of the Project.

Therefore, in recognition of the special needs of this Project and to maintain a spirit of harmony, labor-management peace, and stability during the term of this Agreement, the parties agree to establish effective and binding methods for the settlement of all misunderstandings, disputes or grievances that may arise. Further, the Contractors agree not to engage in any lockout, and the Unions agree not to engage in any strike, slowdown, or interruption or other disruption of or interference with the work covered by this Agreement.

This Agreement shall become and be effective as to the Construction Work on the Project upon the final approval of the City of Oakland of the Owner Participation Agreement between the Redevelopment Agency of the City of Oakland and the Developer ("OPA").

ARTICLE II – Successorship

Section 1. This Agreement is and shall be binding and legally effective upon any successor-in-interest to the Developer, whether by merger or acquisition, and upon any Subsequent Developer which acquires title to the Project or portion thereof whether by sale, lease (other than tenant occupancy leases), or other transfer, or contribution to partnership, joint venture or other entity; provided, however, that this Agreement shall not be binding upon any successor transferee who takes title to the site of any portion of the Project (a) by reason of the default of Developer or Subsequent Developer pursuant to any loan or pursuant to any deed in lieu process, (b) because of the bankruptcy or insolvency of Developer or Subsequent Developer, (c) upon which all Construction Work has been completed or (d) if any successor agreement expires or is otherwise terminated prior to the commencement of construction on the Project (collectively, "Omitted Successors"). Any agreement for a sale, lease or other transfer, or contribution of the Project or an agreement for a merger or acquisition including ownership or control of Developer or Subsequent Developer, other than a transfer to an Omitted Successor, shall include an express assumption of the obligations and undertakings of Developer or Subsequent Developer in this Agreement, including this successorship provision. Developer or Subsequent Developer shall provide the BTC with notice in writing at the close of any sale, acquisition, merger, lease, other transfer or contribution, other than a transfer to an Omitted Successor, and an original executed assumption of this Agreement by the successor. A sham transaction by Developer or Subsequent Developer shall not release Developer or Subsequent Developer from any of its obligations or undertakings under this Agreement.

Section 2. The parties hereto agree that in the event the Developer or Subsequent Developer breaches Section 1 of Article II above, that the actual damages to the Unions or their members would be unreasonably difficult, costly, inconvenient or impracticable to calculate. Accordingly, the parties agree to liquidated damages which bear a reasonable relationship to the actual harm suffered. In the event of a breach of Section 1 of Article II above, Developer or Subsequent Developer shall pay the recognized State of California Prevailing Wage Rate for the appropriate craft for each hour that Construction Work was performed by employees of contractors or subcontractors not pursuant to the terms of this Agreement. The liquidated damages shall be paid as follows: fifty percent (50%) per hour of the State of California Prevailing Wage Rate of the appropriate craft to the qualified pension plan, and fifty percent (50%) per hour of the State of California Prevailing Wage Rate of the appropriate craft to the qualified health and welfare plan, of the Union(s) having jurisdiction over the Construction Work performed by the contractor(s) or subcontractor(s) not pursuant to the terms of this Agreement. This shall be the sole remedy against Developer or Subsequent Developer for a breach of Section 1 of Article II hereof.

Section 3. The Developer or Subsequent Developer shall be released from all subsequent obligations and undertakings of this Agreement, including liability for the payment of liquidated damages under Section 2, with respect to all or any portion of the Project transferred to a successor, provided the Developer or Subsequent Developer satisfies one of the following conditions:

A. The transfer of property to an Omitted Successor of Developer, or Subsequent Developer as provided in Section 1 of Article II.

B. Receipt of written acknowledgments from BTC that they agree that Developer or Subsequent Developer shall be released from the foregoing obligations, undertakings and liability with respect to the portion of the Project transferred to a successor. Such acknowledgment shall not be withheld if, under all the circumstances the BTC, in the exercise of its reasonable judgment, determines that the successor is financially capable of completing the transferred portion of the Project and complying with its obligations and undertakings under this Agreement; or

C. The transfer of the Project or any Phase or other portion of the Project to any Subsequent Developer approved by the Redevelopment Agency of the City of Oakland pursuant to the OPA.

ARTICLE III - Effect of Other Agreements

Section 1. The provisions of this Agreement, including the applicable listed Schedule "A" agreements shall apply to the Contractors and Unions on the Project, notwithstanding the provisions of local and/or national union agreements which may conflict or differ with the terms of this Agreement. Where a subject covered by the provisions of this Agreement is also covered by a Schedule "A" agreement, the provisions of this Agreement shall prevail. Where a subject is covered by the provisions of a Schedule "A" agreement and not covered by this Agreement, the provisions of the Schedule "A" agreement shall prevail as to Construction Work performed by Contractor and Subcontractors under that Schedule "A" agreement. The provisions and requirements of the City of Oakland's "*Local & Small Local for Profit and Not for Profit Business Enterprise Program*" are incorporated herein, as specifically modified by the Preamble of this Agreement. The provisions and requirements of the City of Oakland's "*Local Employment Program*" and the City of Oakland's, "*Oakland Apprenticeship Workforce Development Partnership System*" are also incorporated herein. Collectively these three programs shall be referenced as, "Programs".

Section 2. More particularly, the Developer and the Unions agree that the Project must meet the requirements of the Programs and that the timely construction of the Project will require substantial numbers of employees from construction crafts possessing skills and qualifications that are vital to its completion. The Developer and Unions further agree that the need for apprentices from long-standing, proven apprenticeship programs is critical to the quality construction of this Project. The parties agree that the Project workforce must conform to the requirements of the Oakland Apprenticeship Workforce Development Partnership System (OAWDPS) and the Local Employment Program. To achieve this goal, the Developer will require all Contractors working on the Project to meet those requirements. The Unions and the Developer will undertake all actions necessary to assure that Developer and the Contractors meet these requirements.

Section 3.

(a) With regard to any employer that is independently signed to any Schedule "A" Master Labor Agreement ("MLA"), this Project Labor Agreement shall in no way supersede or prevent the enforcement of any subcontracting clause contained in such MLA, except as specifically set forth in subsection (b) of this Section. Any such subcontracting clause in an MLA shall remain and be fully enforceable between each craft union and its signatory employers, and no provision of this Project

Labor Agreement shall be interpreted and/or applied in any manner that would give this Project Labor Agreement precedence over subcontracting obligations and restrictions that exist between craft unions and their respective signatory employers under an MLA, except as specifically set forth in subsection (b) of this Section 3.

(b) If a craft union (hereafter "Aggrieved Union") believes that an assignment of work on this Project has been made improperly by a contractor or subcontractor, even if that assignment was as a result of another craft union's successful enforcement of the subcontracting clause in its MLA, as permitted by subsection (a) of this Section 3, the Aggrieved Union may submit a claim under the jurisdictional resolution process contained in Article XV of this PLA, and the decision rendered as part of that process shall be enforceable to require the contractor or subcontractor that made the work assignment to assign that work prospectively to the Aggrieved Union. An award made to a craft union under the subcontracting clause of its MLA, as permitted pursuant to Section 3, (a) of this Article, shall be valid and fully enforceable by that craft union unless it conflicts with a jurisdictional award made pursuant to this PLA. If the award made under the MLA conflicts with the jurisdictional award, the award of any damages under the former shall be null and void *ab initio*.

ARTICLE IV - Scope of Agreement

Section 1. Except as set forth elsewhere in this Agreement, this Agreement shall apply and is limited to Construction Work performed on the Project by those Contractors of whatever tier that are awarded contracts for such work. Surveyors, Inspectors and Testers traditionally represented by the Unions signatory to this Agreement and as to which classification a prevailing wage determination has been duly published shall be hired in accordance with the applicable Schedule "A" agreement. The delivery of ready-mix, asphalt, aggregate, sand or other fill material which are directly incorporated from the delivery vehicle into the construction work, as well as the off-hauling of excess debris (excluding debris boxes), fill material and/or soils shall be covered by the terms and conditions of this Agreement. Other than the items mentioned as being included in this Agreement above, there shall be no interference with vendor or supplier deliveries of equipment, apparatus, machinery, and construction materials to the Project site because such deliveries shall not fall under this Agreement.

Section 2. Items specifically excluded from the scope of this Agreement and the definition of "Construction Work" include the following, and neither this Agreement, nor a Schedule "A" agreement, nor any other Addendum, Attachment or Exhibit of any kind shall apply in any manner to the following excluded work:

(a) Work of non-manual employees, including but not limited to superintendents, supervisors above the level of General Foreman (unless covered by the applicable Schedule "A" Agreement), staff engineers, project engineers, quality assurance personnel (other than those covered under Section 1 of Article IV), guard services, security guards, night watchpersons, timekeepers, mail carriers, clerks, office workers including messengers, safety personnel, architects, emergency medical and first aid technicians, and other professional, engineering, administrative, community relations, public affairs, supervisory and management employees, and any other type of employee excluded from coverage of the applicable craft agreement.

(b) Except as provided in subparagraph (f) below, all work performed after the issuance of a Certificate of Occupancy or the equivalent for any structure.

(c) Any work performed on or near or leading to or onto the site of work covered by this Agreement and undertaken by state, county, city or other governmental bodies or their respective contractors; or by public utilities or their contractors; and/or by Developer and/or Subsequent Developers (for work which is not part of the Construction Work as defined in this Agreement).

(d) Non-construction support services contracted by the Developer or Subsequent Developer, the General Contractor(s), the owner of the Project or any Contractor in connection with this Project.

(e) All off-site maintenance of leased equipment and on-site supervision of on-site repairs or maintenance.

(f) All tenant improvement work performed more than one (1) year following the issuance of the certificate of completion of the building core and shell, or if no such certificates are issued, then after, on the entire shell building, a temporary certificate of completion, a temporary certificate of occupancy, or a similar form of government acceptance.

(g) Realizing that there will be the possible necessity of allowing some prospective retail tenants to utilize contractors that are not qualified contractors within the meaning of this Agreement, the Unions agree to permit the exclusion of tenant improvement work from this Agreement for retail or restaurant premises only, as follows: All retail tenant improvement work for any retail or restaurant tenant for whom the total tenant improvement work for such tenant is less than $100,000.00, as Indexed and increased annually in accordance with the methodology set forth in the Preamble above; provided however, this exclusion shall not be used in respect of any tenant improvement work on the premises of a full service restaurant, which for purposes of this section means a restaurant offering its patrons table and hosting services; or where the kitchen is adequately equipped as a full service kitchen. It is further agreed that the exclusions shall be limited to use on a total of fourteen (14) such retail space exclusions. Up to 10 retail space exclusions may be used in the largest market rate phase, as determined by the Developer and upon notice delivered to the Building Trades Council prior to the start of construction. Determination of whether a retail space qualifies for exclusion shall be based on the City of Oakland valuation of total work to be performed under the building permit process.

(h) <u>Minimum Bids</u>

(1) Any Covered Work where the contractor or subcontractor awarding that work does not receive bids on the work from at least three (3) bona fide unrelated qualified persons, firms or corporations that are signatory to a Schedule "A" Agreement with the Union having jurisdiction over the work, in accordance with the provisions of this Section 2, (h). This provision shall only be applicable if the Union(s) having craft jurisdiction over the work being bid is given notice that there may be fewer than three (3) bona fide unrelated and qualified bidders sent at least eight (8) working days prior to the close of bid date and fully describing the scope of work to be bid. If, upon opening the bids, the Contractor rejects them all and rebids the work, the Union will have the opportunity to assist in finding a sufficient minimum number of unrelated and qualified

bidders within eight (8) working days of receipt of notice that all bids were rejected and the work will be rebid. The Union may direct signatory contractors to the Contractor bidding the work, and the Developer or Subsequent Developer or Contractor shall take reasonable steps to ensure that plans and specifications for the second solicitation of bids shall be made available on an expedited basis to any Union signatory contractor indicating an interest in submitting a bid during the second solicitation period. Contractors bidding under these conditions shall have a minimum of seven (7) working days to submit a bid.

(2) The parties further agree that a "qualified contractor" must demonstrate that it/he carries appropriate Workers' Compensation insurance, or participates in a State recognized Workers' Compensation ADR Program. A qualified contractor must also be able to demonstrate that it/he is licensed, bondable and insurable. Union signatory contractors' bids will not be rejected based on arbitrary and capricious manipulation of insurance requirements. Insurance adjustments for the purpose of meeting SLBE requirements shall not be deemed arbitrary and capricious. A contractor is not "qualified" if it is unable to provide a performance and payment bond from a surety on the Federal Register list of approved sureties.

(i) All work performed by residential tenants within their own dwelling units.

(j) All work by employees of a manufacturer or vendor necessary to maintain its warranty or guarantee if the Unions are unable to furnish qualified individuals certified in good faith, if required, to be capable of performing the specialized work and capable of meeting the manufacturer's requirements for providing a warranty in accordance with Article XII, Section 2.

(k) All laboratory work for specialty testing or inspections that is not covered by a Schedule "A" agreement.

(l) All non-construction support services contracted by any Contractor or Subcontractor or the owner of the project in connection with the Construction Work, including, but not limited to landscape maintenance, general and final janitorial work (not to be interpreted as Construction Clean-Up or Final Construction Clean-Up), for example, work in preparation for showing units to potential renters.

(m) Work related to or arising out of anything other than the Project.

When work listed in this Section 2 of Article IV is performed, the Unions shall continue to be bound by all the provisions of this Agreement.

Section 3. There shall be no limitation or restriction upon the choice of materials or upon the full use and utilization of equipment; machinery; package units; factory pre-cast; prefabricated, or preassembled materials; tools; or other labor-saving devices. Lawful off-site fabrication provisions of the appropriate national or local agreements shall be applicable to any Contractor or Subcontractor signatory thereto.

Section 4. This Agreement shall be binding only on the signatory Contractors, and it shall not apply to their parents, affiliates or subsidiaries. This Agreement shall be binding only with respect to Construction Work on the Project.

Section 5. It is understood that the liability of any Developer, Subsequent Developer, Contractor and/or Subcontractor and the liability of the separate Unions under this Agreement shall be several and not joint with the liability of any other Developer, Subsequent Developer, Contractor, Subcontractor and/or Unions, unless specifically provided for otherwise in Article II, above. The Unions agree that this Agreement does not have the effect of creating any joint employer relationship between or among the Developer or Subsequent Developer, and/or any Contractor or Subcontractor. The Developer and/or Subsequent Developer signatory to this Agreement shall make reasonable efforts to insure that its General Contractor(s) and their Subcontractors comply with the requirements of the applicable Schedule "A" agreements, but shall incur no liability for the failure of such General Contractors or Subcontractors to comply with said Agreements, except as any General Contractor may be liable under the terms of any of its pre-PLA Schedule "A" Agreements. The preceding sentence shall not be interpreted to limit the General Contractor's obligations that may exist to insure that its Subcontractors make the proper contributions to the Union trust funds, but the General Contractor(s) shall not be liable for any sanctions or penalties (including fees, liquidated damages or fines) assessed against any Contractor or Subcontractor by any such trust funds, except as General Contractor(s) may be liable under the terms of any of its pre-PLA Schedule "A" Agreements.

ARTICLE V - Labor Management Meeting

The parties to this Agreement recognize the necessity for cooperation and communication between Labor and Management, and for the elimination of disputes and misunderstandings between the parties. To this end, representatives of the respective General Contractor(s) will meet monthly with the representatives of the signatory Building Trades Unions to promote harmonious and stable labor/management relations on this Project, and to insure effective and constructive communications between the labor and management parties. The date and time of these meetings will be determined by the General Contractor(s) and the Building Trades Council and will be open to all representatives of Contractors and Unions signatory to this agreement. The meetings will be held at the offices of the Alameda County Building & Construction Trades Council, or at the General Contractor's option, at the jobsite.

ARTICLE VI - No Strike–No Lockout

Section 1. During the life of this Agreement, the Unions, their agents, their representatives and their employees agree that they shall not incite, encourage, condone or participate in any strike, walkout, slowdown, sit-down, stay in, boycott, sympathy strike, picketing or other work stoppage for any cause whatsoever with respect to this Project; and it is expressly agreed that any such action is in violation of this Agreement, except, as to any Contractor, with respect to non-payment of wages as provided for in a Schedule "A" Agreement to which the Contractor is bound. In the event of the threat or occurrence of any such activity the Unions shall undertake all reasonable means to prevent or to terminate any such activity. There shall be no lockout by any Contractor. In the event of a violation of this provision, any Contractor or Union, as the case may be, shall be entitled to seek relief in court, specifically including injunctive relief, to restrain any such action on the part of the Union(s) or the Contractor, and/or any of

their agents, representatives or employees. It is agreed, however, that the Contractors may lay off employees for lack of work, or in the event that a strike, picketing or other work stoppage impedes the work of the Project.

Section 2. No picket lines will be established at the Project by any of the Unions. The Unions agree that they will not sanction or support in any way any picket line and will affirmatively take all measures necessary to effectively induce their members to report for work as scheduled and that responsible representatives of the Unions who are employed on the Project will also do so themselves.

Section 3. No employee shall engage in activities which violate this Article. Any employee who participates in or encourages any activities that interfere with the normal operation of the Project shall be subject to disciplinary action, up to and including discharge..

Section 4. Payments to Health and Welfare, Pension and to Other Established Fringe Benefit Funds and Payment of Weekly Payroll. Notwithstanding the provisions of this Agreement, it is agreed that the particular Union involved retains the right to withhold the services of its members (but not a right to picket) from a particular Contractor who:

(a) Fails to make timely payments to the Union Health & Welfare, Pension, Vacation and Holiday, Annuity or other tax-deferred fund, Apprentice and Training, or Industry Funds (collectively, "Trust Funds") in accordance with the provisions of that particular Contractor's current labor agreement with the particular Union; or (b) Fails to timely pay its weekly payroll.

However, prior to withholding its members' services on account of a failure to make timely payments to any Trust Fund pursuant to subparagraph (a) above, the Union involved will give at least five (5) working days (unless a lesser period is provided within the applicable craft union agreement, but in no event less than forty-eight (48) hours') written notice by facsimile and registered or certified mail, return receipt requested, to the Developer or Subsequent Developer, each involved Contractor and to the General Contractor of such failure to pay. Representatives of the parties to the dispute will meet within the five (5) day period to attempt to resolve the dispute, and there shall be no withholding of services pending the outcome of said meeting. In the event the Union or any of its members withholds services from such Contractor or Subcontractor, the Developer or Subsequent Developer, General Contractor or other Contractor shall have the right to rebid the Construction Work of such Contractor or Subcontractor (in which case the provisions of Article IV, Section 2(f) of this Agreement shall be applicable to such rebid) or replace such Contractor or Subcontractor with any other Contractor or Subcontractor who executes an Assent.

Should a Contractor performing work on this Project be delinquent in the payment of Trust Fund contributions required under this Agreement with respect to employees represented by the Union, the Union may request, that the General Contractor issue joint checks payable to the Contractor and the appropriate employee benefit Trust Fund(s) until such delinquencies are satisfied. Any Trust Fund claiming that a Contractor is delinquent in its fringe benefit contributions to the fund, will provide written notice of the alleged delinquency to the affected Contractor, with copies to the General Contractor, the Developer or Subsequent Developer and the owner/lessor of the Project. The notice will indicate the amount of delinquency asserted and the period that the delinquency covers. It is agreed, however, with respect to Contractors delinquent in trust fund contribution

payments, that nothing in this Agreement shall affect normal contract remedies available under the local collective bargaining agreements. If the General Contractor is delinquent in the payment of Trust Fund(s) contributions for Construction Work performed on this Project, the General Contractor agrees that the affected Trust Fund(s) may place the Developer or Subsequent Developer and owner/lessor of the Project on notice of such delinquencies and the General Contractor further agrees that the Developer or Subsequent Developer and/or owner/lessor of the Project may issue joint checks to the General Contractor and the Trust Fund(s) until the delinquency is satisfied.

Section 5. Expiration of Local and Other Applicable Agreements. In the event that any applicable Schedule "A" labor agreement expires and the parties to that agreement fail to reach agreement on a new contract by the date of expiration, a Union shall continue to provide employees to the Contractors working on the Project under all the terms of the expired agreement until a new agreement is negotiated, at which time all terms and conditions of that new agreement shall be applied to Construction Work at the Project, except to the extent they conflict with any provision of this Agreement. In addition, if the new labor agreement provides for wage or benefit increases, then any Contractor shall pay to its employees who performed Construction Work at the Project during the hiatus between the effective dates of such labor agreements, an amount equal to any such wage and benefit increases established by and in accordance with the new Schedule "A" labor agreement for such work performed. All parties agree that such affected Contractor shall be solely responsible for any retroactive payments to its employees and trust funds and that the General Contractor shall not have any obligations, responsibility or liability whatsoever for any such retroactive payments or collection of any such retroactive payments from any other Contractor. Nothing herein will prevent the Union(s) and Contractor(s) upon mutual agreement from deciding to use an interim agreement pending the final negotiations for a new collective bargaining agreement.

Section 6. It is agreed that except as otherwise provided in this Agreement and in accord with the union security provisions of the Schedule "A" agreements, the Unions shall be the sole source of all craft employees for Construction Work for the Project. As to the Construction Work, the Contractors agree to observe the hiring practices of the respective Union and to utilize its registration facilities and referral systems, provided that in the event the referral facilities maintained by the applicable Union does not refer the employees as requested by the Contractor within a seventy-two (72) hour period after such requisition is made by the Contractor (Saturdays, Sundays and recognized holidays excepted), the Contractor may employ applicants from any source.

ARTICLE VII - Work Week and Holidays

The normal work week shall be governed by the applicable Schedule "A" agreements. The only recognized holidays are those listed in the applicable Schedule "A" agreements.

ARTICLE VIII - Wage Scales and Fringe Benefits

Wages, hours, fringe benefits and all Trust Fund contributions shall be determined by the applicable Schedule "A" agreements.

ARTICLE IX – Safety

Section 1.

(a) Safety. It shall be the responsibility of each Contractor to ensure safe working conditions and employee compliance with any safety rules contained herein or established by the Contractor as they respect that particular Contractor's work. It is understood that the employees have an individual obligation to use diligent care to perform their work in a safe manner and to protect themselves and the property of the Contractor. The parties hereby agree that the General Contractor or any Contractor may delegate its obligations under this Article IX, Section 1 to a sub-tiered Contractor who actually performs the applicable work. Nothing in this Section 1 or elsewhere in this Agreement shall be deemed to make the Developer or Subsequent Developer, General Contractor or any other Contractor responsible for the safety violations of any other Contractor or Subcontractor, either expressly or implicitly, nor shall the Unions be liable for safety violations of the Contractors or their subcontractors.

(b) Rules. Employees shall be bound by the safety, security and visitor rules and environmental compliance requirements established by the Contractor. These rules will be published and posted in conspicuous places throughout the work site. An employee's failure to satisfy his/her obligations under this Section may subject the employee to discipline, including discharge.

(c) Smoking. The parties acknowledge that the environmental and safety restrictions governing conduct at the Project site may prohibit smoking at any time in any location or facility.

Section 2. Water and Sanitary Facilities.
The Contractor(s) shall provide adequate supplies of drinking water and sanitary facilities for all employees. Proper notification of this requirement shall be provided to the Contractor(s) at the pre-bid and pre-job conference mark-up to insure compliance with this Section.

ARTICLE X - Working Conditions

Section 1. There will be no organized coffee breaks or other non-working time established during working hours, unless established by law, regulation or the applicable Schedule "A" Agreement, provided, however, when working conditions permit, workers will be permitted to have personal containers of non-alcoholic beverages, the contents of which may be consumed during working hours at their assigned work locations. Rest periods shall be provided in accordance with Wage Order 16 of the Industrial Wage Commission.

Section 2. There shall be no limit on production by workers, nor restrictions on the full use of tools or equipment. Slowdowns and featherbedding practices will not be tolerated. The lawful manning provisions of the applicable Schedule "A" agreements shall govern.

Section 3. Contractors shall establish such reasonable Project rules as the Contractors deem appropriate and not inconsistent with this Agreement, which rules shall be subject to the grievance procedure should the Union(s) disagree with the reasonableness of the rule(s). In any dispute over the application of a rule, the grieving party may contest the reasonableness of the rule, the facts of the alleged violation, and the appropriateness of any discipline imposed. These rules will be explained at the

pre-job conference and posted at the Project site by the applicable Contractor and may be amended thereafter as necessary. Failure to observe these rules and regulations by any employee may be grounds for discipline, including discharge.

ARTICLE XI - Union Representation

Authorized representatives of the Union shall have access to the Project, provided that such representatives fully comply with posted visitor, security and safety rules and the environmental compliance requirements of the Project. Each Contractor recognizes the right of access set forth in this Section and such access will not be unreasonably withheld from an authorized representative of the Union.

ARTICLE XII - Management's Rights

Section 1. Each Contractor retains the full and exclusive authority for the management of its operations. Except as expressly limited by other provisions of this Agreement, each Contractor retains the right to direct the workforce, including the hiring, promotion, transfer, layoff, discipline or discharge of its employees in accordance with the Schedule "A" agreements; the selection of foremen; the assignment and schedule of work; the promulgation of reasonable work rules; and, the necessity of overtime work, the determination of when it will be worked and the number of employees engaged in such work. No rules, customs, or practices that limit or restrict productivity, efficiency or the individual and/or joint working efforts of employees shall be permitted or observed. Each Contractor may utilize any methods or techniques of construction.

Section 2. There shall be no limitation or restriction by a signatory Union upon a Contractor's choice of materials, design or manufacture, nor, upon the full use and utilization of equipment, machinery, tools, or other labor saving devices. The Union agrees that it will not in any way restrict the implementation of such new devices or work methods. If there is any disagreement between a Contractor and a Union concerning the manner or implementation of such device or method of work, the implementation shall proceed as directed by the Contractor, and the Union shall have the right to grieve and/or arbitrate the dispute as set forth in this Agreement. The on-site installation or application of all items shall be performed by the craft having jurisdiction over such work; provided, however, it is recognized that installation of specialty items which may be furnished by the owner of the Project or a Contractor shall be performed by employees employed under this Agreement who may be directed by other personnel in a supervisory role; provided, however, in limited circumstances requiring special knowledge of the particular item(s), work may be performed by employees of the vendor or other companies where necessary to protect a manufacturer's warranty. In such instances all provisions of this Agreement shall apply. The issue of whether it was necessary to use employees of the vendor or other companies to protect the manufacturer's warranty shall be subject to the grievance and arbitration clause of this Agreement.

Section 3. Upon notification to the Unions, the General Contractor can require Contractors working on the Project to utilize the various substance abuse provisions contained within the Schedule "A" agreements.

Section 4. Neither this Agreement nor any of the Schedule "A" agreements shall in any way be interpreted to limit the General Contractor's rights to subcontract out any or all portions of the work so long as the subcontractor signs a Letter of Assent to be bound to this Agreement and is signatory to the appropriate Union's Schedule "A" Agreement for Construction Work on the Project.

ARTICLE XIII - Non-Discrimination

The Unions and Contractor(s) shall not discriminate against any employee or applicant for employment because of race, color, sex, national origin, age, religion, or any other basis prohibited by law. Both the Unions and the Contractor(s) are committed to the recruitment of local applicants into the construction industry. The Unions and the Contractor(s) are committed to working directly with community groups, the City of Oakland, the Oakland Redevelopment Agency and those other partners that have successfully built an alliance for the purpose of effectively recruiting and retaining local applicants into the various Local Union Apprenticeship Programs and employment on the Project.

ARTICLE XIV - Equal Employment Opportunity

The Unions and the Contractor(s) support the concept of equal employment opportunity and shall make every reasonable effort to ensure that minority and women-owned businesses are given the opportunity to competitively bid for work at the project.

ARTICLE XV - Jurisdictional Dispute Resolution

1. The Contractor/Employer(s) shall assign work on the basis of traditional craft jurisdictional lines.

2. There shall be no strikes, picketing, sympathy strikes, leafleting or work disruption or stoppages of any kind because of jurisdictional disputes.

3. When conflicting claims for work on the Project are submitted to a Contractor/Employer, the dispute shall be resolved pursuant to agreed upon Jurisdictional Dispute Procedures, as adopted by the National Building & Construction Trades Department, or by the Mechanical Allied Crafts (MAC), or by the Northern California Basic Crafts Alliance (NCBCA) Jurisdictional Dispute Resolution Procedures. It is understood by the parties that these Procedures might be amended from time to time. In the event a jurisdictional dispute arises between two or more Unions affiliated with the National Building & Construction Trades Department, such dispute shall be resolved by the procedure set forth in the Plan for the Settlement of Jurisdiction Disputes in the Construction Industry. In the event a jurisdictional dispute arises between two or more Unions affiliated with the MAC, such dispute shall be resolved under the MAC Procedure. In the event a jurisdictional dispute arises between two or more Unions affiliated with the NCBCA, such dispute shall be resolved under the NCBCA Procedure.

4. In the event a jurisdictional dispute arises between two or more Unions that are not stipulated to the same jurisdictional dispute resolution procedure, the dispute shall be handled in accordance with and resolved as follows:

5. In the event a jurisdictional dispute arises while the parties are attempting to negotiate an alternative resolution mechanism either party may refer the jurisdictional dispute to the General Presidents of the affected unions, and if the General Presidents cannot resolve the dispute within five (5) business days of the dispute being referred to them for resolution, the dispute shall be resolved as follows:

6. The dispute shall be submitted to arbitration before an arbitrator selected from the Panel of Permanent Arbitrators for resolution. The Panel of Permanent Arbitrators shall be composed of: David Nevins, Gerald McKay, Robert Hirsch, William Riker and Barry Winograd. The Arbitrator shall be selected by alternately striking the names of Arbitrators from the list of five (5) permanent Arbitrators. The order of striking names from the list of arbitrators shall be determined by a coin toss, the winner of which shall decide whether they wish to strike first or second. Such striking shall take place within three (3) days. If a party does not respond within three (3) days, this means any Arbitrator from the list is acceptable. The remaining Arbitrator shall serve as the Arbitrator who shall hear the dispute on an expedited basis, but in no case longer than seven (7) days, and resolve the dispute. The Arbitrator shall render his decision within three (3) days of the hearing.

7. In rendering his decision, the Arbitrator shall determine:

   (a) First, whether a previous agreement of record or applicable agreement, including a disclaimer agreement, between the National and International Unions to the dispute governs;

   (b) Only if the Arbitrator finds that the dispute is not covered by an appropriate or applicable agreement of record or agreement between the crafts to the dispute, he shall then consider the established trade practice in the industry and prevailing practice in the locality. Where there is a previous decision of record governing the case, the Arbitrator shall give equal weight to such decision of record, unless the prevailing practice in the locality in the past ten (10) years favors one craft. In that case, the Arbitrator shall base his decision on the prevailing practice in the locality. Except, that if the Arbitrator finds that a craft has improperly obtained the prevailing practice in the locality through raiding, the undercutting of wages or by the use of vertical agreements, the Arbitrator shall rely on the decision of record and established trade practice in the industry rather than the prevailing practice in the locality.

   (c) Only if none of the above criteria is found to exist, the Arbitrator shall then consider that because efficiency, cost or continuity and good management are essential to the well being of the industry, the interests of the consumer or the past practices of the employer shall not be ignored.

   (d) The Arbitrator shall comply with the Code of Professional Responsibility for Arbitrators of Labor Management Disputes jointly adopted by the National Academy of Arbitrators, the American Arbitration Association and the Federal Mediation and Conciliation Service. The Arbitrator shall set forth the basis for his decision and shall explain his findings regarding the applicability of the above criteria. If lower-ranked criteria are relied upon, the Arbitrator

shall explain why the higher-ranked criteria were not deemed applicable. The Arbitrator's decision shall only apply to the job in dispute.

(e) Agreements of record are applicable only to the parties signatory to such agreements. Decisions of record are applicable to all trades.

(f) The Arbitrator is not authorized to award back pay or any other damages for a misassignment of work. Nor may any party to this Plan bring an independent action for back pay or any other damages, based upon a decision of an Arbitrator.

(g) Each party to the arbitration shall bear its own expense for the arbitration and agrees that the fees and expenses of the Arbitrator shall be borne by the losing party or parties.

8. ENFORCEMENT

(a) Any decision or interpretation rendered by an arbitrator shall be immediately accepted and complied with by all parties subject to this Agreement. If a party fails to accept and comply with a decision or interpretation rendered by an arbitrator, any party to the dispute may seek court enforcement of the decision or ruling.

(b) The Arbitrator shall have no authority to undertake any action to enforce his decision after a hearing beyond informing the affected parties of his decision. Rather, it shall be the responsibility of the prevailing party to seek appropriate enforcement of a decision. The prevailing party in any enforcement proceeding shall be entitled to recover its reasonable costs and attorney fees from the non-prevailing party. In the event the Arbitrator is made a party to, or is otherwise required to participate in any such enforcement proceedings for whatever reason, the non-prevailing party shall bear all reasonable costs, attorney fees, and any other expenses incurred by the Arbitrator in those proceedings.

9. If there is a strike, sympathy strike, work stoppage, slowdown, picketing or otherwise advising the public that a labor dispute exists or interference with the progress of the Project by reason of a jurisdictional dispute, the Contractor/Employer (who has complied with the Arbitrator's decision) affected by said Union conduct, shall have the right to seek full legal redress in the Courts of California, including injunctive relief and damages.

ARTICLE XVI - Expedited Arbitration Procedure

Section 1. Upon written notice by hand-delivery or facsimile of a violation of the no-strike provisions of this Agreement to the BTC and the Union, the Union(s) and their officers shall take immediate action and shall use their best efforts to prevent, end, or avert any such activity or the threat thereof by any of its officers, members, representatives, or employees, including, but not limited to, publicly disavowing any such action and ordering all such officers, representatives, employees or members who participate in such unauthorized activity to cease and desist from same immediately and to return to work and comply with this Agreement. Nothing in this Agreement shall be construed to limit or restrict the right of any of the parties to this Agreement to pursue fully any and all other remedies available under law in the event of a violation of this Agreement.

Section 2. In consideration of the foregoing, the Contractor(s) shall not incite, encourage, or participate in any lockout or cause to be locked out any employee covered under the provisions of this Agreement.

Section 3. Any employee or employees inciting, encouraging, or participating in any strike, slowdown, picketing, sympathy strike or other activity in violation of this Agreement is subject to immediate discharge and access to the grievance and arbitration procedures of this Agreement.

Section 4. Any party to this Agreement may institute the following binding arbitration procedure when such a breach of the no strike-no lock out provisions of this Agreement is alleged. In the event a party institutes this procedure, arbitration shall be mandatory. Should the Arbitrator determine that notice of the hearing has been properly given, the arbitration shall proceed in to a default award should a party fail or refuse to participate in the Arbitration proceedings.

Section 5. The party invoking this procedure shall immediately notify by telephone and/or facsimile Gerald McKay, who the parties agree shall be the permanent Arbitrator under this procedure. In the event that the permanent Arbitrator is unavailable at any time, notice shall be immediately given in the same manner to the alternative Arbitrator, Barry Winograd. If neither is available Gerald McKay shall select another arbitrator. If Gerald McKay is unavailable to select another arbitrator, then Barry Winograd shall select another arbitrator.

Section 6. Upon receipt of said notice, the Arbitrator or the alternate Arbitrator, as the case may be, shall designate a place for, schedule and hold a hearing within twenty-four (24) hours.

Section 7. The Arbitrator shall notify the parties by facsimile, telephone or similar means of the place and time chosen for the session. A failure of any party or parties to attend said hearing shall not delay the hearing of evidence or issuance of an award by the Arbitrator.

Section 8. The sole issue at the hearing shall be whether or not a violation of the no strike-no lock out provisions of this Agreement has in fact occurred, and the Arbitrator shall have no authority to consider any matter in justification, explanation, or mitigation of such violation or to award damages, which issue is reserved for court or other arbitration proceedings, if any. The award shall be issued in writing within three (3) hours after the close of the hearing and may be issued without a written opinion. If any party desires a written opinion, one shall be issued within fifteen (15) days, but its issuance shall not delay compliance with, or enforcement of, the award. The Arbitrator's award shall be served on all parties by hand or registered mail upon issuance.

Section 9. The award shall be final, binding and non-reviewable as to the merits. Such Award shall be final and binding on all parties and may be enforced by any court of competent jurisdiction upon the filing of this Project Labor Agreement and all other relevant documents referred to hereinabove in the following manner. Written notice of the filing of such enforcement proceedings shall be given to the other party. In the proceeding to obtain a temporary order enforcing the arbitrator's Award, all parties waive the right to a hearing and agree that such proceedings may be *ex parte*. Such agreement does not waive any party's right to participate in a hearing for a final order of enforcement. The court's order or orders enforcing the arbitrator's Award shall be served on all parties by hand or by delivery to their last known address by registered mail.

Section 10. The costs of arbitration, including the fee and expenses of the Arbitrator, shall be borne by the losing Party.

Section 11. The procedure contained in this Article shall be applicable only to alleged violations of the no strike–no lockout provisions of this Agreement. Discharge or discipline of employees for violations of this Article shall be subject to the grievance and arbitration procedures of this Agreement.

Section 12. Any rights created by statute or law governing arbitration proceedings inconsistent with the above procedure or which interfere with compliance hereto are hereby waived by the parties to whom they accrue.

ARTICLE XVII - Grievance and Arbitration Procedure

Section 1. Where a subject covered by the provisions of this Agreement is also covered by a Schedule "A" Agreement, the grievance provisions of this Agreement shall be used to resolve the grievance. Where a subject is covered by the provisions of a Schedule "A" Agreement and not covered by this Agreement, the grievance procedure of the Schedule "A" Agreement shall be used to resolve the grievance. If a grievance is properly covered by the grievance provisions of this Agreement it is agreed by all involved parties to be covered by the Schedule "A" Grievance Procedure, then the grievance procedures of the Schedule "A" may be used. Disputes subject to resolution under the terms of this Agreement shall be governed by the following grievance and arbitration procedures.

Section 2. A grievance shall be considered null and void if not brought to the attention of the Contractor(s) within five (5) working days after the grievance is alleged to have occurred or within five (5) working days after the Union's first knowledge of the grievance. Similarly, a grievance shall be considered null and void if not brought to the attention of the Union(s) within five (5) working days after the grievance is alleged to have occurred or within five (5) working days after the Contractor(s)' first knowledge of the grievance.

Section 3. Grievances shall be settled according to the following Steps:

Step 1: The steward or business representative and the grievant shall attempt to resolve the grievance with the craft supervisor.

Step 2: In the event the matter remains unresolved in Step 1 above, within five (5) working days, the grievance shall be reduced to writing and may then be referred by the Union to the Contractor(s) for discussion and resolution.

Step 3: In the event the matter remains unresolved in Step 2 above, either Party may request, within five (5) working days, that the dispute be submitted to arbitration. The time limits set out in this procedure may, upon mutual agreement, be extended. Any request for arbitration, request for extension of time limits, and agreement to extend such time limits shall be in writing.

Step 4: The Parties agree that the Arbitrator who will hear the grievance shall be selected from a list of arbitrators obtained from the American Arbitration Association and shall be selected by the alternate striking method. The arbitration procedure contained herein, once invoked, shall be mandatory. Should a Party to the procedure fail or refuse to participate in the hearing, if the Arbitrator determines that proper notice of the hearing has been given, said hearing shall proceed to a default award. The Arbitrator's award shall be final and binding on all Parties to the arbitration. The costs of the arbitration, including the arbitrator's fee and expenses, shall be borne equally by the Parties. The Arbitrator's decision shall be submitted in writing and shall be final and binding on all parties signatory to this Agreement. The Arbitrator's decision shall be confined to the question(s) posed by the grievance and the Arbitrator shall not have authority to modify, amend, alter, add to, or subtract from, any provisions of this Agreement. The Arbitrator shall have the authority to utilize any appropriate and lawful equitable or legal remedy to prevent and/or cure any breach or threatened breach of this Agreement.

Section 4. The Contractor(s), as well as the Unions, may bring forth grievances under this Article. Either party to a grievance may invite the General Contractor to participate in resolution of a grievance. The General Contractor may, at its own initiative, participate in Steps 1 through 3 of this procedure.

ARTICLE XVIII - General Savings Clause

It is not the intent of any party to this Agreement to violate any Federal, State or local laws governing the subject matter contained herein. If any provisions contained herein are finally held or determined to be in conflict with, invalid, inoperative, unenforceable, illegal or void by any competent authority of the federal, state or local government or a court of competent jurisdiction, the operation of such sections or provisions shall be suspended and the parties will promptly enter into negotiations concerning the clauses affected by such a legal decision for the purpose of achieving conformity with the requirement of any applicable law so violated and the intent of the provision(s) in questions. If any governmental agency requires that work on the Project be performed pursuant to a Project specific plan or program the parties shall meet for the purpose of negotiating any changes to this Agreement which may be necessary to comply with such plan or program. Any negotiations which occur as a result of this Article shall be limited to the subject of negotiating changes to the Agreement to comply with such plan or program. The provisions of Article VI shall remain in effect notwithstanding any reopening of this Agreement.

ARTICLE XIX - Agreement On Mutual Cooperation

The Developer and the Building and Construction Trades Council of Alameda County, AFL-CIO and its constituent Local Unions all recognize the value of the Project to the City of Oakland and the community in which the Project is located. Accordingly, the parties to the Project Labor Agreement mutually assure each other of their fullest cooperation with each other and their intention to use every lawful means at their disposal to make this Project not merely a success, but a significant demonstration of the ability of the parties to work together to deliver an outstanding product for and to the City and the community at large. In keeping with their intentions, the BTC is committed to inducing and encouraging qualified workers resident within the MacArthur Transit Village area to work on the Project with and through the Local Unions, in accordance with the lawful Hiring Hall rules. The BTC will

respond in timely fashion to requests from the Developer or Contractors for workers from the MacArthur Transit Village area and encourage community organizations within the area to do likewise.

ARTICLE XX - Term of Agreement

This Agreement shall become effective in accordance with its terms and shall continue in full force and effect until the Construction Work has been completed.

In witness whereof, the parties have executed this Agreement as of the Effective Date with the exception of the Contractors who will become parties to this Agreement by signing the Letter of Assent (Attachment "A").

Executed this 6th day of July, 2009 at Oakland, California.

MACARTHUR TRANSIT COMMUNITY PARTNERS, LLC

By: MPI MacArthur, LLC, Member

By: _____
Terrence M. McGrath, Managing Member

By: BRIDGE Equity Investment (MacArthur Transit Community) LLC, Member

By: BRIDGE Urban Infill Land Development, LLC, Member
By: BRIDGE Infill Development, Inc., Manager

By: _____
Lydia Tan, Executive Vice President

ALAMEDA BUILDING AND CONSTRUCTION TRADES COUNCIL, AFL-CIO

By: _____
Barry Luboviski

Asbestos Workers, Local 16

By: _____
Steve Steele

Boilermakers, Local 549

By: _____
Frank Secreet

respond in timely fashion to requests from the Developer or Contractors for workers from the MacArthur Transit Village area and encourage community organizations within the area to do likewise.

ARTICLE XX - Term of Agreement

This Agreement shall become effective in accordance with its terms and shall continue in full force and effect until the Construction Work has been completed.

In witness whereof, the parties have executed this Agreement as of the Effective Date with the exception of the Contractors who will become parties to this Agreement by signing the Letter of Assent (Attachment "A").

Executed this 6th day of July, 2009 at Oakland, California.

MACARTHUR TRANSIT COMMUNITY PARTNERS, LLC

By: MPI MacArthur, LLC, Member

By: _____
Terrence M. McGrath, Managing Member

By: BRIDGE Equity Investment (MacArthur Transit Community) LLC, Member

By: BRIDGE Urban Infill Land Development, LLC, Member
By: BRIDGE Infill Development, Inc., Manager

By: _____
Lydia Tan, Executive Vice President

ALAMEDA BUILDING AND CONSTRUCTION TRADES COUNCIL, AFL-CIO

By: _____
Barry Luboviski

Asbestos Workers, Local 16

By: _____
Steve Steele

Boilermakers, Local 549

By: _____
Frank Secreet

Bricklayers & Allied Craftsmen, Local 3

By: _____ for
Tom Spear

Northern California Regional Council of Carpenters, on behalf of,
(Carpenters, Local 713, Lathers, Local 68L, Millwrights, Local 102, Pile Drivers, Local 34)

By: _____
Robert Alvarado

District Council of Plasterers and Cement Masons of Northern California

By: _____
Steve Scott

Cement Masons, Local 549

By: _____
Steve Scott

Plasterers, Local 66

By: _____
Chester Murphy

Electrical Workers, Local 595

By: _____
Victor Uno

Elevator Constructors, Local 8

By: _____
Pat McGarvey

Northern California District Council of Laborers
(on behalf of, Hod Carriers, Local 166, Laborers, Local 67, Laborers, Local 304)

By: _____
~~Jose Moreno~~ OSCAR DE LA TORRE

Hod Carriers, Local 166

By: _____
Sam Robinson

Laborers, Local 67

By: _____
Victor Parra

Laborers, Local 304

By: _____
Jose Zapien

Operating Engineers, Local 3

By: _____
Russ Burns

District Council Ironworkers of the State of California and Vicinity

By: _____
Joe Standley

Ironworkers, Local 378

By: _____
Emilio Rivera

District Council #16, Painters & Allied Trades on behalf of: (Auto & Marine Painters, Local 1176, Carpet & Linoleum Layers, Local 12, Glaziers, Architectural Metal & Glassworkers, Local 169, Painters & Tapers, Local 3)

By: _____
Doug Christopher

Roofers and Waterproofers, Local 81

By: _____
Doug Ziegler

Sheet Metal Workers, Local 104

By: _____
Bruce Word

Sign Display and Allied Crafts, Local 510

By: _____
Mike Hardeman

Sprinkler Fitters, Local 483

By: _____
Stan Smith

Teamsters, Local 853

By: _____ FOR ROMEO ALOISE
Romeo Aloise

United Association of Steamfitters, Pipefitters, Plumbers & Gasfitters, Local 342

By: _____
Jay Williams

Journeymen & Apprentices of the Pipefitting Industry, Underground Utility/Landscape, Local 355

By: _____
Dennis Soares

Sheet Metal Workers, Local 104

By: _____
Bruce Word

Sign Display and Allied Crafts, Local 510

By: _____
Mike Hardeman

Sprinkler Fitters, Local 483

By: _____
Stan Smith

Teamsters, Local 853

By: _____
Rome Aloise

United Association of Steamfitters, Pipefitters, Plumbers & Gasfitters, Local 342

By: _____
Jay Williams

Journeymen & Apprentices of the Pipefitting Industry, Underground Utility/Landscape, Local 355

By: _____
Dennis Soares

"Attachment A"

LETTER OF ASSENT

The undersigned, as a Contractor or Subcontractor ("Employer") on the _____Project (hereinafter "Project") for and in consideration of the award to it of a contract to perform work on said Project and in further consideration of the mutual promises made in the Project Labor Agreement for the Project (hereinafter "Agreement"), a copy of which was received and is acknowledged, hereby:

Accepts and agrees to be bound by the terms and conditions of the Agreement, together with any and all amendments and supplements now existing or which are later made to said Agreement.

Certifies that is has no commitments or agreements which would prelude its full and complete compliance with the terms and conditions of said Agreement.

Agrees to secure from any Contractor (as defined in said Agreement) that is or becomes a subcontractor at any tier to it, and from any successors, a duly executed Agreement To Be Bound in form identical to this document.

Agrees that it shall be bound by all applicable trust agreements and plans for the provision of such fringe benefits as accrue to the benefit of the employees including, but not limited to, Health and Welfare, Pension, Training, Vacation, Apprenticeship and Training, and/or other benefits provided pursuant to the appropriate craft agreement contained in "Schedule A" of the Project Agreement.

Dated:_____ (Print Name of Company)

By;_____
(Title)
Contractor's State License #_____
Address_____

_____
Phone Number_____
FAX Number _____

_____
(Name of Prime Contractor or Higher
Level Subcontractor)

EXHIBIT L

CITY OF OAKLAND CONDITIONS OF APPROVAL

Contractor must meet the provisions of the project's PDP Condit ions of Approval dated June 6th, 2008 and FDP Conditions of Approval dated 4/8/2011 per the attached document.

- PDP Conditions of Approval, 16 pages
- FDP Conditions of Approval, 18 pages

CONDITIONS OF APPROVAL
FOR THE MACARTHUR TRANSIT VILLAGE PROJECT

Part 1: General Conditions of Approval

1. **Approved Use**
   Ongoing
   a) The project shall be constructed and operated in accordance with the authorized use as described in the application materials, staff report, and the plans submitted on **May 28, 2008**, and as amended by the following conditions. Any additional uses or facilities other than those approved with this permit, as described in the project description and the approved plans will require a separate application and approval. Any deviation from the approved drawings, Conditions of Approval or use shall require prior written approval from the Director of City Planning or designee. The project may however increase the number of permitted residential dwelling units up to a maximum of 675 dwelling units, as analyzed in the MacArthur Transit Village Project EIR provided that a) the ratio of affordable units (20% of market rate units) is maintained; and the resulting project design with the additional units shall conform in all major respects with the approved Preliminary Development Plan.

   b) This action by the **City Planning Commission** ("this Approval") includes the approvals set forth below. This Approval includes:

      i. **Planned Unit Development (PUD), under Oakland Planning Code Chapters 17.122 and 17.140;**

      ii. **Major Conditional Use Permit (CUP), under Oakland Planning Code Chapter 17.134; and**

      iii. **Design Review, under Oakland Planning Code Chapter 17.136**

   c) **This Approval shall not become effective unless the proposed legislative actions (rezoning and text amendment) occur as stated in Condition of Approval 20.**

2. **Effective Date, Expiration, Extensions and Extinguishment**
   Ongoing
   Unless a different termination date is prescribed, this Approval shall expire **two years** from the approval date, unless within such period all necessary permits for construction of Stage 1 (the BART Parking Garage) have been issued. Upon written request and payment of appropriate fees submitted no later than the expiration date of this permit, the Director of City Planning or designee may grant two one-year extensions of this date, with additional extensions subject to approval by the approving body. Expiration of any necessary building permit for this project may invalidate this Approval if the said extension period has also expired. These time periods are "tolled" due to litigation challenging this approval and thus such time shall not be counted toward expiration of this approval. The Preliminary Development Plan Approval for the Planned Unit Development Permit shall expire June 4, 2018 and all Final Development Plan phases shall be reviewed and approved by that date (see below for details on FDP Staging).

Notwithstanding, the timeframes provided for in this Condition no. 2 the project sponsor shall, if feasible, make reasonable effort to proceed with all phases of the project as expeditiously as possible, and have the full build out of the project be completed as early as possible.

FDP Staging
Submittal of Final Development Plans (FDPs) shall be permitted in five (5) stages over a 10 year time period from the date of this approval, as detailed below.

(a) Each stage of FDP is described below:

i. Stage 1. Stage 1 FDP for the project will include the construction of Building E, the replacement BART parking garage, site remediation, Internal Drive, the Frontage Road improvements, and the portion of Village Drive that extends from the Frontage Road to the Internal Drive. Stage 1 FDP shall be submitted to the Planning Department for review and processing and the project applicant shall make regular and consistent progress toward approval of Stage 1 FDP within 1 year from the date of this approval. If approved, construction associated with Stage 1 FDP shall commence in earnest by not later than 2 years from the date of Stage 1 FDP approval.

ii. Stage 2. Stage 2 FDP for the project will include construction of Building D, consisting of a minimum of 90 below market rate rental units. Stage 2 FDP shall be submitted to the Planning Department for review and processing and the project applicant shall make regular and consistent progress toward approval of Stage 2 FDP within 3 years from the date of this approval. If approved, construction associated with Stage 2 FDP shall commence in earnest by not later than 2 years from the date of Stage 2 FDP approval.

iii. Stage 3. Stage 3 FDP for the project will include construction of Building A, consisting of up to 240 ownership residential units and 26,000 square feet of commercial space. All street improvements, including the completion of Village Drive and any new traffic signals required by the project, will be completed in this phase. This phase will also include the completion of a public plaza directly across Frontage Road from the existing BART Plaza. Stage 3 FDP shall be submitted to the Planning Department for review and processing and the project applicant shall make regular and consistent progress toward approval of Stage 3 FDP within 3 years from the date of this approval. If not feasible, Stage 3 FDP approval may be delayed up to a year. If approved, construction associated with Stage 3 FDP shall commence in earnest not later than 2 years from the date of Stage 3 FDP approval.

iv. Stage 4. Stage 4 FDP for the project will include the construction of Building B, consisting of up to 150 ownership residential units and 5,500 square feet of commercial space. Stage 4 FDP shall be submitted to the Planning Department for review and processing and the project applicant shall make regular and consistent progress toward approval of Stage 4 FDP within 8 years from the date of this approval. If approved, construction

associated with Stage 4 FDP shall commence in earnest not later than 2 years from the date of Stage 4 FDP approval.

v. Stage 5. Stage 5 FDP for the will include the construction of Building C, consisting of up to 195 ownership residential units and 12,500 square feet of commercial space. This phase will also include the construction of a community center use on the ground floor of Building C. Stage 5 FDP shall be submitted to the Planning Department for review and processing 10 years from the date of this approval. If approved, construction associated with Stage 5 FDP shall commence in earnest not later than 2 years from the date of Stage 5 FDP approval.

(b) For purposes of this conditions, the term "commence in earnest" shall mean to initiate activities based on a City-issued building permit and other necessary permit (s) and diligently prosecute such permit(s) in substantial reliance thereon and make regular and consistent progress toward the completion of construction and the issuance of final certificate of occupancy, including successful completion of building inspections to keep the building permit and other permits active without the benefit of extension.

(c) Provided that Stage 1 and 2 FDPs are approved in accordance with the above time frames, the Developer shall have the discretion to change which buildings (A, B, or C) are constructed in which Stages (3, 4 or 5) provided that the FDP submittal dates for these stages remain the same. All other modifications to FDP staging shall be subject to review and approval by the Planning Commission.

(d) FDP Stages may be combined and reviewed prior to the outlined time frames. If each stage of FDP is not submitted/completed within the time frames outlined above, the PDP shall be considered null and void.

(e) If, subsequent to this approval, a Development Agreement for this project is adopted by the City, the phasing and construction timeframes prescribed within the Development Agreement shall supersede this condition of approval and govern construction phasing for the project.

3. **Scope of This Approval; Major and Minor Changes**
Ongoing
The project is approved pursuant to the Planning Code only. Minor changes to approved plans may be approved administratively by the Director of City Planning or designee. Major changes to the approved plans shall be reviewed by the Director of City Planning or designee to determine whether such changes require submittal and approval of a revision to the approved project by the approving body or a new, completely independent permit.

4. **Conformance to Approved Plans; Modification of Conditions or Revocation**
Ongoing
a) Site shall be kept in a blight/nuisance-free condition. Any existing blight or nuisance shall be abated within 60-90 days of the project sponsor obtaining site control, unless an earlier date is specified elsewhere.

b) The City of Oakland reserves the right at any time during construction to require certification by a licensed professional that the as-built project conforms to all applicable zoning requirements, including but not limited to approved maximum heights and minimum setbacks. Failure to construct the project in accordance with approved

plans may result in remedial reconstruction, permit revocation, permit modification, stop work, permit suspension or other corrective action.

c) Violation of any term, Conditions, Mitigation Measures or project description relating to the Approvals is unlawful, prohibited, and a violation of the Oakland Municipal Code. The City of Oakland reserves the right to initiate civil and/or criminal enforcement and/or abatement proceedings, or after notice and public hearing, to revoke the Approvals or alter these Conditions and Mitigation Measures if it is found that there is violation of any of the Conditions, Mitigation Measures or the provisions of the Planning Code or Municipal Code, or the project operates as or causes a public nuisance. This provision is not intended to, nor does it limit in any manner whatsoever the ability of the City to take appropriate enforcement actions.

5. **Signed Copy of the Conditions and Mitigation Measures**
With submittal of a demolition, grading, and building permit
A copy of the approval letter and Conditions and Mitigation Measures shall be signed by the property owner, notarized, and submitted with each set of permit plans to the appropriate City agency for this project.

6. **Indemnification**
Ongoing
a) The project applicant shall defend (with counsel reasonably acceptable to the City), indemnify, and hold harmless the City of Oakland, the Oakland City Council, the City of Oakland Redevelopment Agency, the Oakland City Planning Commission and their respective agents, officers, and employees (hereafter collectively called the City) from any claim, action, or proceeding (including legal costs and attorney's fees) against the City to attack, set aside, void or annul this Approval, or any related approval by the City. The City shall promptly notify the project applicant of any claim, action or proceeding and the City shall cooperate fully in such defense. The City may elect, in its sole discretion, to participate in the defense of said claim, action, or proceeding. The project applicant shall reimburse the City for its reasonable legal costs and attorney's fees.

b) Within ten (10) calendar days of the filing of a claim, action or proceeding to attack, set aside, void, or annul this Approval, or any related approval by the City, the project applicant shall execute a Letter Agreement with the City, acceptable to the Office of the City Attorney, which memorializes the above obligations and this condition of approval. This condition/obligation shall survive termination, extinguishment, or invalidation of this, or any related approval. Failure to timely execute the Letter Agreement does not relieve the project applicant of any of the obligations contained in 7(a) above, or other conditions of approval.

7. **Conditions of Approval/Mitigation Monitoring Program**
Ongoing
a) All mitigation measures identified in the MacArthur Transit Village Project EIR are included in the Mitigation Monitoring and Reporting Program (MMRP) which is included in these conditions of approval and are incorporated herein by reference, as Attachment 2-A, as conditions of approval of the project. The Standard Conditions of Approval identified in the MacArthur Transit Village EIR are also included in the MMRP, and are therefore, not repeated in these conditions of approval. To the extent that there is any inconsistency between the MMRP and these conditions, the more restrictive conditions shall govern. The project sponsor (also referred to as the Developer, Applicant or MTCP) shall be responsible for compliance with the

recommendation in any submitted and approved technical reports, all applicable mitigation measures adopted and with all conditions of approval set forth herein at its sole cost and expense, unless otherwise expressly provided in a specific mitigation measure or condition of approval, and subject to the review and approval of the City of Oakland. The MMRP identifies the time frame and responsible party for implementation and monitoring for each mitigation measure. Overall monitoring and compliance with the mitigation measures will be the responsibility of the Planning and Zoning Division.

b) For purposes of these conditions of approval, "feasible" means capable of being accomplished in a successful manner within a reasonable period of time, taking into account economic, environmental, legal, social, and technological factors.

8. Severability

Ongoing

Approval of the project would not have been granted but for the applicability and validity of each and every one of the specified conditions and mitigations, and if any one or more of such conditions and/or mitigations is found to be invalid by a court of competent jurisdiction this Approval would not have been granted without requiring other valid conditions and/or mitigations consistent with achieving the same purpose and intent of such Approval.

9. Job Site Plans

Ongoing throughout demolition, grading, and/or construction

At least one (1) copy of the stamped approved plans, along with the Approval Letter and Conditions of Approval and mitigations, shall be available for review at the job site at all times.

10. Special Inspector/Inspections, Independent Technical Review, Project Coordination and Management

Prior to issuance of a demolition, grading, and/or construction permit

The project applicant may be required to pay for on-call special inspector(s)/inspections as needed during the times of extensive or specialized plancheck review, or construction. The project applicant may also be required to cover the full costs of independent technical and other types of peer review, monitoring and inspection, including without limitation, third party plan check fees, including inspections of violations of Conditions of Approval. The project applicant shall establish a deposit with the Building Services Division, as directed by the Building Official, Director of City Planning or designee.

11. Required Landscape Plan for New Construction and Certain Additions to Residential Facilities

Prior to issuance of a building permit

Submittal and approval of a landscape plan for each stage of the project is required. The landscape plan and the plant materials installed pursuant to the approved plan shall conform with all provisions of Chapter 17.124 of the Oakland Planning Code, including the following:

a) Landscape plans shall include a detailed planning schedule showing the proposed location, size, quantities, and specific common botanical names of plant species.

b) Landscape plans for projects involving grading, rear walls on downslope lots requiring conformity with the screening requirements in Section 17.124.040, or vegetation management prescriptions in the S-11 zone, shall show proposed landscape treatments for all graded areas, rear wall treatments, and vegetation management prescriptions.

c) All landscape plans shall show proposed methods of irrigation. The methods shall ensure adequate irrigation of all plant materials for at least one growing season.

12. **Landscape Requirements for Street Frontages.**
Prior to issuance of a final inspection of the building permit

a) All areas between a primary Residential Facility and abutting street lines shall be fully landscaped, plus any unpaved areas of abutting rights-of-way of improved streets or alleys, provided, however, on streets without sidewalks, an unplanted strip of land five (5) feet in width shall be provided within the right-of-way along the edge of the pavement or face of curb, whichever is applicable. Existing plant materials may be incorporated into the proposed landscaping if approved by the Director of City Planning.

b) In addition to the general landscaping requirements set forth in Chapter 17.124, a minimum of one (1) fifteen-gallon tree, or substantially equivalent landscaping consistent with city policy and as approved by the Director of City Planning, shall be provided for every twenty-five (25) feet of street frontage. On streets with sidewalks where the distance from the face of the curb to the outer edge of the sidewalk is at least six and one-half (6 ½) feet, the trees to be provided shall include street trees to the satisfaction of the Director of Parks and Recreation.

13. **Assurance of Landscaping Completion.**
Prior to Issuance of a Certificate of Occupancy
The trees, shrubs and landscape materials required by the conditions of approval attached to this project shall be planted before the certificate of occupancy will be issued; or a bond, cash, deposit, or letter of credit, acceptable to the City, shall be provided for the planting of the required landscaping. The amount of such or a bond, cash, deposit, or letter of credit shall equal the greater of two thousand five hundred dollars ($2,500.00) or the estimated cost of the required landscaping, based on a licensed contractor's bid.

14. **Landscape Maintenance.**
Ongoing
All required planting shall be permanently maintained in good growing condition and, whenever necessary, replaced with new plant materials to ensure continued compliance with applicable landscaping requirements. All required fences, walls and irrigation systems shall be permanently maintained in good condition and, whenever necessary, repaired or replaced.

15. **Bicycle Parking**
Prior to the issuance of first certificate of occupancy
The applicant shall submit for review and approval of the Planning and Zoning Division and Transportation Services Division, a bicycle parking plan that shows bicycle storage and parking facilities to accommodate a minimum of 40 short-term bicycle parking spaces (31 for residential uses and 9 for commercial uses) onsite or on public sidewalk, and a minimum of 160 long-term bicycle parking spaces (156 for residential uses and 4 for commercial uses). The plans shall show the design and location of bicycle racks within the secure bicycle storage areas. The applicant shall pay for the cost and installation of any bicycle racks in the public right of way.

Prior to approval of Final Development Plan for Stage 1
Additionally, the project applicant shall work with the City's Transportation Services Division and BART to implement the City's goals for bicycle parking at Railroad and Bus Terminals (provide a combination of short-term and long-term bike parking equal to 5% of the maximum projected ridership for the BART station). The project applicant shall study the

feasibility of providing a long-term bike parking facility within the BART plaza, commercial area of the development (i.e., café with bicycle storage or bicycle sales and repair shop and storage) or within the proposed parking garage. Said study shall consider economic and physical feasibility and shall be reviewed by the City's Transportation Services Division, Planning and Zoning Division and BART. If the study finds that such a facility is feasible in the commercial area or parking garage: the project applicant shall use its best efforts during the initial marketing of the commercial space to market a portion of the commercial space to potential bike parking facility operators for a market-rate commercial operation, or include a market-rate, long-term bike facility within the parking garage. If the study finds that options for bike parking within the commercial area or parking garage are not feasible, then the project sponsor shall have no further commitment with respect to the long-term bicycle parking for BART.

PART 2: Additional Conditions of Approval for Major Projects

16. Underground Utilities

Prior to issuance of a building permit

The project applicant shall submit plans for review and approval by the Building Services Division and the Public Works Agency, and other relevant agencies as appropriate, that show all new electric and telephone facilities; fire alarm conduits; street light wiring; and other wiring, conduits, and similar facilities placed underground. The new facilities shall be placed underground along the project applicant's street frontage and from the project applicant's structures to the point of service. The plans shall show all electric, telephone, water service, fire water service, cable, and fire alarm facilities installed in accordance with standard specifications of the serving utilities.

17. Improvements in the Public Right-of-Way (General)

Approved prior to the issuance of a P-job or building permit

a) The project applicant shall submit Public Improvement Plans to Building Services Division for adjacent public rights-of-way (ROW) showing all proposed improvements and compliance with the conditions and/or mitigations and City requirements including but not limited to proposed project traffic signals (MacArthur Boulevard/Frontage Road and Telegraph Avenue/40th Street), curbs, gutters, sewer laterals, storm drains, street trees, paving details, locations of transformers and other above ground utility structures, the design specifications and locations of facilities required by the East Bay Municipal Utility District (EBMUD), street lighting, on-street parking and accessibility improvements compliant with applicable standards and any other improvements or requirements for the project as provided for in this Approval. Encroachment permits shall be obtained as necessary for any applicable improvements- located within the public ROW.

b) Review and confirmation of the street trees by the City's Tree Services Division is required as part of this condition and/or mitigations.

c) The Planning and Zoning Division and the Public Works Agency will review and approve designs and specifications for the improvements. Improvements shall be completed prior to the issuance of the final building permit.

d) The Fire Services Division will review and approve fire crew and apparatus access, water supply availability and distribution to current codes and standards.

18. Payment for Public Improvements

Prior to issuance of a final inspection of the final building permit.

The project applicant shall pay for and install public improvements made necessary by the project including damage caused by construction activity.

19. **Compliance Plan**
Prior to issuance of a demolition, grading, or building permit
The project applicant shall submit to the Planning and Zoning Division and the Building Services Division a Conditions/ Mitigation Measures compliance plan that lists each condition of approval and/or mitigation measure, the City agency or division responsible for review, and how/when the project applicant has met or intends to meet the conditions and/or mitigations. The applicant will sign the Conditions of Approval attached to the approval letter and submit that with the compliance plan for review and approval. The compliance plan shall be organized per step in the plancheck/construction process unless another format is acceptable to the Planning and Zoning Division and the Building Services Division. The project applicant shall update the compliance plan and provide it with each item submittal.

PART 3: Project-Specific Conditions of Approval

20. **Rezoning and Zoning Text Amendment**
Required prior to this approval becoming effective
This Approval shall not become effective unless the Zoning Map Amendment and S-15 Text Amendment related to open space standards are adopted by the City Council. The City Council has the authority to consider and revise as appropriate (accept, reject, or modify) the adjudicatory land use decisions of the Planning Commission (including planned unit development permit, design review, and the conditional use permit), regardless of whether an appeal to the City Council is filed challenging such adjudicatory land use decisions.

21. **Residential Parking Permits.**
Required prior to the demolition of the BART surface parking lot; or prior to elimination of half of the existing BART parking spaces
The project sponsor shall work with the City of Oakland to implement a Residential Parking Permit (RPP), in accordance with all legal requirements, within one quarter mile radius around the station in the residential neighborhoods west of Highway 24 and the BART station, north of 40th Street, east of Telegraph Avenue and south of West MacArthur Boulevard. The street segments to be included in the RPP program are generally shown in Exhibit C-4. The RPP would restrict on-street parking by non-residents to less than four hours during the weekdays. The project sponsor shall put $150,000 in escrow in order to fund the RPP. When the funds required by this condition have been exhausted or after five years after the completion of the whole project, the project sponsor shall have no further obligation to pursue or fund any RPP program and any remaining funds shall revert back toward public improvements in the project area as determined by the City.

22. **Traffic Demand Management (TDM) and Parking Program**
Prior to approval of Final Development Plan for Stage 1 FDP and ongoing
The project is conditioned on the implementation of a TDM program by MTCP and effectively monitored by the City, as required in MMRP Mitigation Measures Trans-4 and Trans-9. A draft TDM Plan prepared by Nelson Nygaard dated May 27, 2008, and is included herein as Exhibit C-2. The final TDM Plan, as stipulated in the MMRP, is subject to review by BART, AC Transit and the review and approval by the City of Oakland. The final TDM Plan shall be approved by the City of Oakland Planning Division prior to approval of the Final Development Plan for Stage 1.

Funding for monitoring, reporting and review of the TDM program shall be provided by the project sponsor.

In addition to the CEQA requirements for a TDM program, the TDM program described in MMRP Mitigation Measures Trans-4 and Trans-9 is also designed to promote the City's Transit First Policy of the general plan, reduce parking demand and lessen parking impacts on adjacent neighborhoods and to promote good urban design by reducing the number and size of parking facilities. Therefore MMRP Mitigation Measures Trans-4 and Trans-9 are also imposed as a separate non-CEQA conditions of approval and the TDM program shall be incorporated into the project, for the duration of the project, to maximize parking capacity and help ensure that these goals are met.

23. **Minimum Right-of-Way for Fire Emergency Vehicle Access.**
Prior to approval of Each Stage of Final Development Plan or Vesting Tentative Map and Ongoing
The project shall accommodate the intent of the 2008 fire code provisions for increased right-of-way access as follows:

(a) Village Drive will be maintain an unobstructed right-of-way distance of 26 feet.

(b) Internal Street will include two (2) 26-foot wide staging areas and the remaining right-of-way will remain 20 feet wide.
   i. The staging areas will be a minimum of 30 feet in length.
   ii. No parking or landscaping will be permitted in the staging areas.
   iii. The location of the staging areas will be based on a ladder study to be completed by MTCP in consultation with the Fire Department.
   iv. Fire hydrants will be staggered outside of the staging areas.

(c) Frontage Road will include one (1) 26-foot wide staging area and the remaining right-of-way will remain the same.
   i. The staging area for the frontage road will be located approximately 30 feet north of the crosswalk on the north side of the parking garage.
   ii. The staging area will be a minimum of 30 feet in length.
   iii. No parking or landscaping will be permitted in the staging areas.

(d) In addition to incorporating staging areas and setting a minimum unobstructed street width of 26 feet for Village Drive and 20 feet for Internal Street, as described above, the project sponsor will include Alternate Materials and Methods Requests (AMMRs) into the project to the satisfaction of the Fire Chief. The appropriate AMMRs will be determined by the Fire Chief's review of Final Development Plans or Vesting Tentative Maps, and may include the following measures:
   i. Increased sprinkler density (provide sprinklers in bathrooms and closets)
   ii. Install 8-head instead of 4-head sprinklers
   iii. Design fire hydrants with a minimum 200 foot separation
   iv. Provide dual water connections and water sources per building
   v. Provide Fire Department Connections (FDCs) on each street (minimum of 2 per building)

24. **Air Filtration/Ventilation System.**
Prior to issuance of a building permit
Although the studies conducted for the EIR demonstrate that the project site was found to be below the significance criteria for health risk based on the assessment prepared in

accordance with the California Air Resources Board and the Office of Environmental Health and Hazard Assessment for exposure to vehicular exhaust from roadways, the project sponsor has agreed to incorporate into the project a mechanical ventilation system that meets the efficiency standard of the MERV 13 for those units with windows fronting the freeway or Frontage Road. The ventilations shall be subject to review and approval by the City's Building Services Division. Appropriate maintenance, operation and repair materials will be furnished to project residents.

25. Components of Final Development Plans.
Prior to approval of Any Final Development Plans
In accordance with the Planning Code Chapter 17.140, each stage of FDP shall:
(a) Conform to all major respects with the approved Preliminary Development Plan received by the Planning Division on May 28, 2008, and included as Exhibit F;

(b) Comply with development standards of the S-15 Zone, except and modified for building height as bonus for the Planned Unit Development and shown in the Preliminary Development Plan;

(c) Be consistent with the MacArthur Transit Village Design Guidelines included in these conditions as Exhibit C-3;

(d) Include all information included in the preliminary development plan plus the following:

i. the location of water, sewerage, and drainage facilities;
ii. detailed building floor plans, elevations and landscaping plans;
iii. the character and location of signs;
iv. plans for street improvements; and
v. grading or earth-moving plans.

(e) Be sufficiently detailed to indicate fully the ultimate operation and appearance of the development stage including the quality of exterior materials and windows; and

(f) Include copies of legal documents required for dedication or reservation of group or common spaces, for the creation of nonprofit homes' association, or for performance bonds, shall be submitted with each Final Development Plan.

26. Subdivision Maps
Prior to final approval of Each Final Development Plan
Final Development Plans shall be accompanied by subdivision maps as required to subdivide the property. The subdivision maps shall be reviewed and processed in accordance with Title 17, Subdivisions, of the City of Oakland Municipal Code and the Subdivision Map Act.

27. Final Development Review and Approval by City Council.
Prior to final approval of Any Final Development Plan
All Final Development Plan(s) shall be subject to review and recommendation by the Planning Commission's Design Review Committee and Planning Commission, with final approval by the City Council.

28. Minimum Setback to Buildings Adjacent to Project Site.
Prior to issuance of a building permit
All buildings within the project shall maintain a minimum 5 foot setback, except at the ground level, to existing buildings adjacent to the project site. The 5 foot minimum setback will ensure a minimum setback of 9 feet from the south windows located in the building light

well and 17 feet from the west windows of the existing building at the corner of 40th and Telegraph. The applicant shall show all proposed building setbacks on the plans submitted for a building permit.

New buildings built adjacent to the existing corner building at 40th and Telegraph shall be designed in such a way that the windows are offset from the windows of the existing building to eliminate a direct line of site into existing residents and to ensure privacy for residents of the existing building.

29. Safety Plan.

Prior to issuance of a building permit

The project sponsor shall work with the Oakland Police Department and the Planning and Zoning Division to prepare a safety plan for the portion of the project area along Frontage Road between the BART Garage and the BART Plaza. Without limiting the foregoing, the safety plan shall assess the efficacy and feasibility of installing video security cameras along Frontage Road. The project sponsor shall implement the approved recommendations/ conclusions of the safety study including, if determined necessary and feasible by the City, the implementation of video cameras.

30. Special Project Driveway Design Improvements.

Prior to approval of Each Final Development Plan Stage or Vesting Tentative Map and Ongoing

To limit conflicts between pedestrians, bicycles and vehicles entering and exiting the BART parking garage and residential parking garages within the project, the project driveways shall incorporate the following design measures, subject to review and approval of the City's Transportation Services Division (TSD):

(a) Install a high-visibility crosswalk across Frontage Road connecting the BART garage to the western sidewalk. Note that currently, the City of Oakland does not install high visibility crosswalks at signalized intersections unless there are problems with sight distance.

(b) For driveways along Internal Street, provide adequate sight distance at all residential garage exits. End the ramp before the sidewalk so that the sidewalk remains level and vehicles do not encroach on the sidewalk. Landscaping should be maintained so that adequate sight distance is provided. Consider installing pedestrian warning lights to alert pedestrians to exiting vehicles at driveways with high pedestrian volumes and limited sight distance. Installation of loud audible warning devices is not recommended.

(c) For the driveway along Village Drive, provide adequate sight distance the garage exit. End the ramp before the sidewalk so that the sidewalk remains level and vehicles do not encroach on the sidewalk. Landscaping should be maintained so that adequate sight distance is provided. Consider installing pedestrian warning lights to alert pedestrians to exiting vehicles at driveways with high pedestrian volumes and limited sight distance. Installation of loud audible warning devices is not recommended.

31. Pedestrian Access Paths.

Prior to approval of the Final Development Plan for Stages 1 and 5 or Vesting Tentative Map and Ongoing

Design the paths between Internal Street and West MacArthur Boulevard, and Internal Street and Telegraph Avenue for pedestrian use only.

The two 10-foot wide paths shown on the Preliminary Development Plan between the southern end of Internal Street and West MacArthur Boulevard, and between Internal Street and Telegraph Avenue, along the southern edge of Block C shall be restricted to pedestrian use and signage shall be provided to mark the paths for pedestrian use only.

32. Internal Street.

Prior to approval of the Final Development Plan for Stages 1 or Vesting Tentative Map and Ongoing

The developer shall reserve "Internal Street" on the owner's statement of the Final Map for private street purposes and clearly indicate who will benefit and maintain the private street. The private street maintenance language shall be included in the subdivision CC&R and reviewed and approved by Planning Director and City attorney. The developer shall provide proof on how the private street shall be maintained. Unless otherwise approved by the Engineering Division, the private street shall be constructed to the City's standard details for public street construction.

33. Specific Project Intersection Improvements.

Prior to approval of Final Development Plan for Stage 3 or Vesting Tentative Map and Ongoing

In order to enhance pedestrian activity and safety to and from the project site, the following measures shall be implemented, subject to review and approval by the City's Transportation Services Division (TSD):

(a) For the intersection of 40th Street and the Frontage Road:
- i. Prohibit right turns on red and provide a leading pedestrian interval.
- ii. Increase the initial walk interval (this allows more time for clusters of pedestrians to leave the sidewalk when crossing)
- iii. Install high visibility cross walks (i.e., ladder striping or colored pavement)
- iv. Install audible pedestrian countdown signals
- v. Provide separate curb ramps for each cross walk

(b) For the intersection of Telegraph Avenue and Village Drive
- i. Increase the initial walk interval (this allows more time for clusters of pedestrians to leave the sidewalk when crossing)
- ii. Install high visibility cross walks (i.e., ladder striping or colored pavement)
- iii. Install audible pedestrian countdown signals
- iv. Provide separate curb ramps for each cross walk

(c) For the intersection of Frontage Road and Village Drive
- i. Install high visibility cross walks (i.e., ladder striping or colored pavement)
- ii. Provide a raised intersection with high visibility striping to connect pedestrians from the BART plaza to Village Drive
- iii. Install signage (i.e., "Left Turn Only, Except Shuttles and Bicycles") and striping at this intersection to prohibit south bound traffic except shuttles and bicycles from continuing south to West MacArthur Boulevard.

(d) For the intersection of West MacArthur Boulevard and Frontage Road
- i. Increase the initial walk interval (this allows more time for clusters of pedestrians to leave the sidewalk when crossing)
- ii. Install high visibility cross walks (i.e., ladder striping or colored pavement)
- iii. Install audible pedestrian countdown signals
- iv. Provide separate curb ramps for each cross walk

v. Install bulb-outs at corners

(e) For the intersection of the BART Garage and Frontage Road

i. Construct curbs and provide striping to prohibit vehicles exiting the BART garage from turning right; and to prohibit northbound vehicle from traveling further north beyond the driveway into the BART garage.

ii. Provisions should be made to allow through access for emergency vehicles, such as City and BART Police, Fire and Ambulance vehicles.

34. Coordination of BART Parking and Plaza Improvements
Prior to approval of Final Development Plan for Stage 1

(a) The BART parking structure shall include a minimum of 300 parking spaces.

(b) The project applicant shall coordinate with BART to facilitate construction of the BART parking structure and BART Plaza improvements as shown in the Preliminary Development Plan.

35. Bicycle Access and Bicycle Paths
Prior to approval of Final Development Plan for Stage 1 or Vesting Tentative Map and Ongoing
In order to enhance bicycle safety to and from the project site, the following measures shall be implemented, subject to review and approval by the City's Transportation Services Division:

(c) Provide two-way bike lanes on Frontage Road. Locate the northbound bike lane west of the northbound (right-turn only) vehicle lane. Southbound bicyclists could use the southbound shuttle lane.

(d) Install STOP signs for vehicles exiting the BART garage and for southbound shuttles approaching the BART garage.

(e) Provide adequate sight distance at the garage exit. Landscaping should be maintained so that adequate sight distance is provided.

(f) Provide signage at the West MacArthur Boulevard/Frontage Road intersection directing bicyclists to the bicycle path or lanes on Frontage Road.

(g) Install bicycle detection for all actuated through movements or left turns at the new signal at 40th Street and Frontage Road; the new signal at Telegraph Avenue and Village Drive; and West MacArthur Boulevard and Frontage Road.

(h) Install signage (i.e., "Left Turn Only, Except Shuttles and Bicycles" and "Left Turn Only, Except Shuttles and Bicycles") and striping at the Frontage Road/Village Drive intersection to prohibit southbound and westbound vehicles, except shuttle buses and bicycles, from continuing southbound to West MacArthur Boulevard. (Also see Condition 34 (c) iii).

(i) Study the feasibility of providing a "bicycle box" at the southbound approach to the West MacArthur Boulevard/Frontage Road/37th Street intersection and at the northbound approach to the Frontage Road/40th Street intersection. Project applicant

shall submit said feasibility to the City's Transportation Services Department for review and approval. If said improvement is determined to be feasible, the project applicant shall implement this measure.

(j) Study the feasibility of using colored pavement or other visual treatments on the bike path or lanes to increase their visibility and use by bicyclists. Project applicant shall submit said feasibility to the City's Transportation Services Department for review and approval. If said improvement is determined to be feasible, the project applicant shall implement this measure.

36. Area Right of Way Improvements.

Prior to approval of Final Development Plan for Stage 3 or Vesting Tentative Map and Ongoing

Project applicant shall perform feasibility and other studies of the following measures for review and approval by the City Planning Division and Transportation Services Division (TSD). The Project applicant shall implement items determined feasible by the City.

(a) Removal of the slip right-turns on northbound and southbound Telegraph Avenue at West MacArthur Boulevard.

(b) Providing street furniture and widening sidewalks where feasible for street frontages immediately adjacent to the project site.

37. Traffic Monitoring.

Prior to project construction, and after completion of project

Project sponsor shall pay to monitor traffic volumes and speeds on the following roadways in accordance with the schedule below. In consultation with local residents, and in accordance with all legal requirements, appropriate traffic calming measures, such as speed humps, or roadway closures, should be considered if and when excessive traffic volumes or speeding are observed. These potential improvements should be funded by the project applicant, if approved by the City's Transportation Services Division (TSD):

(a) 37th Street between West MacArthur Boulevard and Telegraph Avenue; Monitoring shall be undertaken before construction, and one year after a certificate of occupancy issued for the BART garage.

(b) 38th Street between Telegraph Avenue and Webster Street; Monitoring should be undertaken before construction, and about one year after a certificate of occupancy issued for FDP Stage 3, or when eighty (80) percent occupancy is achieved, whichever occurs earlier.

(c) Clarke Street and Ruby Street between 38th Street and 40th Street; Monitoring should be undertaken before construction, and about one year after a certificate of occupancy issued for FDP Stage 3, or when eighty (80) percent occupancy is achieved, whichever occurs earlier.

38. Outdoor Active Areas.

Prior to approval of Final Development Plan for each stage

To the maximum extent practicable, exterior active use areas, including playgrounds, patios, and decks, shall either be shielded by buildings or otherwise buffered to further reduce exterior noise for project residents.

39. BART Garage Elevations

Prior to approval of Final Development Plan for Stage 1 and Ongoing

Final Development Plans for the BART Garage shall include detailed architectural plans demonstrating how the design and building details break up the massing of the parking garage. Signage and advertising on the BART garage shall be subject to the guidelines and standards in the City of Oakland Uniform Sign Code, including Code Section 17.104.060 that prohibits advertising signs, except as permitted via a Franchise Agreement or Relocation Agreement is authorized by the City Council.

***40.* Green Roofs/Roof Top Gardens.**

Prior to approval of Final Development Plan for Stages 2 through 5

As part of the submittal for each FDP application for each phase of FDP, except Stage 1 (BART parking garage), the project sponsor shall study the feasibility of methods to further reduce heat island effect and/or provide additional open space for resident use. Potential methods include but are not limited to green roofs, roof gardens, roof decks, open or partially enclosed private or common balconies. For purposes of this condition of approval, feasibility as defined above includes the consideration of proximity to the highway or streets, location above livable space, construction type, insurability, long term maintenance, HOA costs, and the use of space for other purposes. The feasibility study for implementing additional methods to further reduce heat island effect and/or provide additional open space for resident use shall be provided to Planning Staff as part of each FDP application. The intent of this condition is to further the sustainable elements of the project design and potentially provide more open space area for the project residents.

41. Building Height.

Prior to approval of any Final Development Plan

In accordance with the Preliminary Development Plan (PDP) received by the Planning Division on May 28, 2008, buildings within the project area shall vary in height along each street frontage. Permitted building height by street frontage is shown on PDP sheet A-1.0H, and listed below:

(a) Telegraph Avenue, south of Village Drive: 55 to 60 feet
(b) Telegraph Avenue, north of Village Drive: 50 to 75 feet
(c) Village Drive, south side of street and west of Internal Street: 55 to 65 feet
(d) Village Drive, south side of street and east of Internal Street: 65 to 80 feet
(e) Village Drive, north side of street and west of Internal Street: 60 to 80 feet
(f) Village Drive, north side of street and east of Internal Street: 70 to 85 feet
(g) 40th Street: 60 to 80 feet
(h) Buildings along east edge of transit plaza: 75 to 85 feet
(i) Internal Street, east side of street: 55 to 70 feet
(j) Internal Street, west side of street: 45 to 70 feet
(k) Frontage Road: 65 to 80 feet
(l) Parking garage: 68 feet

The height above 45 feet allowed on Telegraph Avenue is contingent on the use of quality building design, exterior materials and windows.

Because the Preliminary Development Plan (PDP) received by the Planning Division on May 28, 2008, shows a total of 624 units, and per Condition No. 1 the project is permitted to include a maximum of 675 units based on the EIR analysis and the City's desire for increased density, the buildings heights shown above may be slightly altered to accommodate this permitted increase in units. However, any such increase in height shall be reviewed as part of

the Final Development Plan; and no such increase in height shall be permitted on Telegraph Avenue without modification to the PDP.

42. Permitted land uses.

On-going.

Permitted land uses within the project area are subject to the S-15 zone, and shall further be subject to and consistent with the permitted land uses outlined in the Development Agreement or Owner Participation Agreement. Until an agreement on commercial uses is reached in the Development Agreement or Owner Participation Agreement, proposals for individual commercial users on the site will be subject to approval by the City Council.

43. Live-work Spaces along Village Drive to be Removed from the Preliminary Development Plan

The live work spaces shown in the Preliminary Development Plan (PDP) on Village Drive are not to be approved, instead commercial/retail space at a minimum height of 15 feet shall be substituted for said live/work spaces. Some office uses shall be allowed for a period of time to be determined in the Development Agreement or Owner Participation Agreement, after which time the commercial/retail spaces will revert to retail-only spaces. This condition does not pertain to the live/work spaces on 40th Street that are shown in the Preliminary Development Plan.

APPROVED BY:

City Planning Commission: June 4, 2008 (date) 5 - 0 (vote)

City Council: July 1, 2008 (date) 8 - 0 (vote)

Applicant and/or Contractor Statement

I have read and accept responsibility for the Conditions of Approval, as approved by Planning Commission action on June 4, 2008, and subsequently amended by the City Council on July 1, 2008. I agree to abide by and conform to these conditions, as well as to all provisions of the Oakland Zoning Code and Municipal Code pertaining to the project.

Signature of Owner/Applicant: _____ (date) 2/25/11

Signature of Contractor _____ (date)

CITY OF OAKLAND

Community and Economic Development Agency, Planning & Zoning Services Division
250 Frank H. Ogawa Plaza, Suite 3315, Oakland, California, 94612 - 2032

SENT VIA EMAIL AND U.S. MAIL

April 8, 2011

Keystone Development Group
5858 Horton Street, Suite 170
Emeryville, CA 94608
Attn. Art May

RE: Case File No. PUDF10097 and TTM8047 (related to PUD060058)

Dear Mr. May:

On April 5, 2011, the Oakland City Council approved your application for a Vesting Tentative Tract Map and Final Development Permit for Stage One of the MacArthur Transit Village Planned Unit Development, based on the information contained in the December 21, 2010 and April 5, 2011 City Council staff reports and the November 3, 2010 and March 16, 2011 City Planning Commission staff reports, with additional conditions of approval (see attached for the list of adopted conditions of approval).

This action of the City Council is final, effective immediately, and is not administratively appealable.

If you have any questions, please contact the case planner, Catherine Payne, at (510) 238-6168 or cpayne@oaklandnet.com.

Sincerely,

For
SCOTT MILLER
Zoning Manager

Attachment: Revised and Adopted Conditions of Approval (City Council April 5, 2011)
cc:

Alta Bates Summit Medical Center	The Surgery Center/ABSMC	Holland & Knight LLP
350 Hawthorne Avenue	3875 Telegraph Avenue	50 California Street, Suite 2800
Oakland, CA 94609	Oakland, CA 94609	San Francisco, CA 94111
Attn. Charles Prosper, Chief Operating Officer	Attn. Kim D'Ambrosia, Administrator	Attn. David L. Preiss, Esq.

LEGAL NOTICE: This action of the City Council is final. Any party seeking to challenge such decision in court must do so within ninety (90) days of this decision letter, unless a different date applies.

CERTIFICATE OF MAILING

I certify that on April 8, 2011 the decision letter relating to the MacArthur Transit Village Stage One project was placed in the U.S. mail system, postage prepaid for first class mail and sent to Applicant (Art May) and Alta Bates Summit Medical Center (Charles Prosper, Chief Operating Officer), The Surgery Center/ABSMC (Kim D'Ambrosia), and Holland & Knight LLP (David Preiss, Esq.), to the addresses listed above.

Jessica M. Chatman (JESSICA M. CHATMAN) 4/8/2011
(NAME AND SIGNATURE OF PERSON PLACING IN MAIL) DATE)

5/2/11
MacArthur Transit Community Partners

CITY COUNCIL CONDITIONS OF APPROVAL OF THE MACARTHUR TRANSIT VILLAGE PROJECT STAGE 1 FINAL DEVELOPMENT PERMIT (PUDF10097) AND VESTING TENTATIVE MAP (VTTM 8047)

AS REVISED AND ADOPTED BY CITY COUNCIL ON APRIL 5, 2011

The proposal is hereby approved subject to the following Conditions of Approval:

STANDARD CONDITIONS:

1. Effective Date, Expiration, and Extensions

a. Ongoing

The effective date, expiration, and extensions of the approval of the Final Development Permit shall be consistent with the Development Agreement by and between City of Oakland and Macarthur Transit Partners, LLC Regarding the Property and Project Known as "Macarthur Transit Village" (DA) Section 3.3.3, adopted July 21, 2009 by the Oakland City Council.

b. Ongoing

Unless a different termination date is prescribed, this Approval shall expire two (2) calendar years from the approval date, unless within such period all necessary permits for construction or alteration have been issued, or the authorized activities have commenced in the case of a permit not involving construction or alteration. Upon written request and payment of appropriate fees submitted no later than the expiration date of this permit, the Director of City Planning or designee may grant an extension of this date. Expiration of any necessary building permit for this project may invalidate this Approval if the said extension period has also expired.

2. Scope of This Approval

a. Ongoing

The property shall be subdivided and constructed in accordance with the approved Vesting Tentative Tract Map dated **February 28, 2011**, and the approved Final Development Permit, dated October 26, 2010, as amended by these Conditions of Approval. The proposal is approved pursuant to the Planning Code and Subdivision Regulations of the Municipal Code only and shall comply with all other applicable codes, requirements, regulations and guidelines, including but not limited to those imposed by the City's Building Services Division, Fire Marshal, and Public Works Agency. The proposal shall specifically comply with the conditions required by the Planning Division, Oakland Building Services Division, Fire Department, and EBMUD, and attached to these conditions of approval.

3. Conditions of Approval for Project (Case File No. PUD060058)

a. Ongoing

All Conditions of Approval, Standard Conditions of Approval, and Mitigation Measures for the Project (Case File No. PUD060058) {"Previous Conditions") are hereby incorporated herein by reference as if fully set forth herein, except that to the extent there are any conflicts between the conditions imposed by this approval and the Previous Conditions, the conditions imposed by this approval shall control.

4. Street Vacation Notification

a. Throughout Apgar Street Vacation Application Process

Neighbors immediately adjacent to Apgar Street shall be provided notice of City Planning Commission and/or City Council meetings relating to Apgar street vacation and/or the Stage One final map. .

FIRE DEPARTMENT CONDITIONS For TTM8047:

5. Fire Department Conditions of Approval for Project (Case File No. TTM8047)

A. Hydrants: Public hydrants, each one capable of delivering a minimum fire flow designed for the size and type of construction of the buildings are required with 300 foot spacing between hydrants. The applicant needs EBMUD to obtain a verifiable (confirmed flow test or) simulated hydraulic analysis to size the underground water mains adequately for minimum hydrant flow. Ref.: 2007 CFC Appendix B, 2001 CFC Section 508.

B. Electrical power and cable services to the site: All overhead wiring shall be undergrounded. Existing and new power and communication cables serving the proposed buildings shall be undergrounded to eliminate hazards posed to rescue and fire fighting when operating the ladder trucks.

C. Fire Apparatus Access, Internal Street Parking:

1. Fire apparatus access road widths shall adopt the fire department access provisions of the 2007 CFC Appendix D, Section D103 as amended per 2008 Oakland Ordinance No. 12871. The 2008 Oakland Fire Code Appendix III-D shall apply to new and existing roads to allow not only the OFD ladder and engine apparatus from the city's fire stations but also those from other cities where the City's Fire Department has mutual response agreements with. Portions of fire apparatus access roads inside the property are less than the specified 26 feet required by the 2007 California Fire Code as amended per Oakland Ordinance 12871. The Fire Department is consistently enforcing the state code and city amendments on minimum fire apparatus access road width on various on-going development projects. Code mitigations involving practical difficulties of the building design will be considered only after available water flow and fire truck access constraints have been fully complied with.

2. Follow the City's Public Works Agency's Road Design Standards if the specific design specifications are more restrictive than the new 2007 CFC Appendix D for fire access roads. The following shall be used to consider options for parallel or diagonal parking at the site's internal streets:

- 26 feet minimum effective road width: 0 parking on either side of the street.
- The 2007 CFC Appendix D, Section D105.2 requires the 26-foot minimum fire apparatus access road width when the buildings or portions of the buildings served

by the access road exceed 30 feet in height and when access roads are served with on site hydrants.

3. The above may be modified to include Public Works Agency design standards and fire code exceptions, subject to approval by the Fire Marshal. An effective road width having no less than 26 feet for fire apparatus access and equipment staging shall be maintained. Ref.: 2007 California Fire Code Article 5, Section 503, Appendix D as amended per 2008 Ordinance 12871.

D. Vegetation Management

4.1 The Vegetation Management Unit will not be enforcing the rules applicable to the Wildfire Assessment District. However, foliage from plants and trees are regulated as noted below.

- The trees selected shall be maintained to allow fire apparatus ladder access to rescue openings (i.e. rescue windows, porches or private decks) starting at the fourth floor elevation of the proposed building/s. The building owner shall maintain the maximum tree height and openings to allow the Fire Department's boom ladder to operate effectively with 10-foot clear horizontal openings between foliage at all times.
- Planter areas that may alternatively be used to drain standpipes and automatic fire sprinkler systems shall provide proof of adequate sizing or route the drains to appropriately sized sewer systems. Ref.: City's Clean Water Program, "Source Control Measures to Limit Storm Water Pollution"

E. Building Permit Plans, Code Variances, Related Fire Code Permits:

1. Oakland Fire Department references minimum fire department access to the site as the lowest grade level on the street for fire truck staging operations. Building designs shall address the type of construction with height limitations regulated by codes without constraining fire apparatus and fire crew access. Impaired occupant means of egress that diminished fire crew and fire apparatus access shall be addressed by mitigations which may include but not be limited to the following:

- Type I A or fire resistive construction which is similar to high rise dwelling occupancies where access to rescue windows is not required. This means upgraded type of construction in fire resistance for the number for the number of stories, floor areas, and/or permitted occupancies. Ref.: 2007 CBC Section 1026.1
- Addressable fire alarm system with graphical monitoring.
- Two interconnected combination standpipe systems at every floor. This means multiple water supply feeds to the automatic fire sprinkler system with two riser control assemblies serving each floor of the building.
- Enhanced automatic extinguishing system demand. This would require the minimum number of discharging heads or minimum hydraulically-remote areas to be increased 200%.
- Increased stand pipe hose demand,

Coordinate the design concepts or approaches to design parameters involved in fire alarm, automatic fire sprinkler and stand pipe systems for fire code permits for projects with fire code variance/s.
Coordinate the design for upgraded type/s of construction with the City's Building Services and the Fire Marshal whether the minimum type of construction is solely or jointly enforced by the Fire Marshal and/or the Building Official or the City's Review/Inspection matrix system for buildings when life safety is compromised due to a building code variance.

2. The Fire Prevention Bureau shall review related hazardous materials and fire code permits related to the building permit plans, building and fire code variances. This condition applies to samples determined by laboratory soils tests or property records from authorities or agencies having jurisdiction.

3. Addressable fire alarm systems and multiple water supply feeds to each common residential floor and/or unit will be required as partial mitigation to constrained rescue window access. Coordinate the concepts or approach to fire alarm and automatic extinguishing systems design with the Fire Department or applicant's fire alarm system consultant prior to the review of automatic sprinkler, standpipe, and fire alarm systems designs for permits.
References: 2007 CFC Section 1026,

F. Hazardous Materials.
The city files looked into have no recorded data on the above project address related to hazardous material contamination of ground soils within the various sites. No building plans have been submitted to determine that the project has no planned human occupancy below grade level that could potentially require soils analysis or restrictions due to environmental issues. Building permit applications related to this map shall be accompanied by soils reports, as determined to be necessary by the Fire Department and/or Engineering Services Division.

ENGINEERING SERVICES CONDITIONS:

6. Engineering Services Conditions of Approval for Project (Case File No. TTM8047)
If the project is approved by the Advisory Agency, the following conditions shall apply:

A. Prior to any building permits being issued by the City of Oakland the applicant shall sign a Subdivision Improvement Agreement to construct all the improvements in the public right-of-way and in the public access easements. On the Map these areas are identified as 39th Street (Village Drive), Internal Road, and frontage Road. The City shall not sign the Final Map until a Subdivision Improvement Agreement has been signed by the applicant for these improvements.

B. In accordance with California Building Code Sections 504.2 and 509.7, group R-2 occupancies of Type VA + sprinkler construction shall not exceed 60 feet in height measured from the grade plane to the roof nor 4 stories measured above the parking garage.

C. The proposed project may increase sanitary sewer flows beyond the capacity of the existing sanitary sewer system. Obtain approval from the City Public Works Agency concerning the extent of the sanitary sewer replacement and/or rehabilitation prior to the City issuing the Grading, Demolition or P-job Permit.

D. All property owners shall sign the Final Map. A portion of the access to this project is owned by Caltrans. An easement has been given to BART for this access. The applicant shall confirm that this easement grants the City the same rights as Caltrans. Caltrans may be required to sign the Final Map.

E. For each lot shown on the Map, please clearly state within the boundary of each lot, the total number of condominiums for the lot and the total number of commercial and residential condominiums for that lot.

F. Parcel F and Parcel G shall be dedicated as a Public Access Easements to be maintained by the property owners.

G. The roadway width within the emergency vehicle access easements and the public access easements shall be a minimum of 26-feet wide from face-of-curb to face-of curb.

H. Parking spaces are shown along the existing and proposed right-of-way within the project site. Parking meters may be required along this right-of-way; the applicant shall coordinate with the City to determine need and location for parking meters on this public street. The parking spaces conform to City standards and shall provide sufficient room for a two lane traveled way?

I. Provide a minimum 5-foot sidewalk measured from the back of curb along the western side of Parcels B1 and B2. If the applicant chooses to not provide a sidewalk along this side of the lots, exit discharge for structures to be constructed on the lots shall be restricted to the Internal Road side of the lots.

J. Provide City standard separation distance between trees and street lights.

K. Clearly delineate on the Map the public bus and shuttle bus areas.

L. Provide a typical section for the public right-of-way immediately off of 40th Street.

M. Show proposed new and modified traffic signal locations on the Map.

N. Clearly label and dimension public access easements, right-of-way width dimensions, emergency vehicle easements, and public right-of-way on the typical sections. Generally, sidewalks shall be included within both sides of the public access easements and right-of-way.

O. Coordinate the temporary removal of any bus stop and shelter with AC Transit. Provide documentation of AC Transit approval of the proposed removal and replacement prior to obtaining Grading, Demolition, or P-job permits.

P. The renaming of 39th Street to Village Drive requires City Council approval. Approval of the renaming is discretionary and may be denied.

Q. The entire width of 39th Street will not be vacated and then rededicated. Show only the portion of street required for dedication and vacation. The area in between shall remain as right-of-way.

R. The TTM shows 9 sanitary sewer manholes in the public right-of-way. Please consolidate the number of manholes to four. If the design is unable to reduce the number of manholes the owners of the property shall maintain the manholes.

S. Show location, purpose, and width of all existing and proposed easements.

T. Major and Minor Encroachment Permits shall be obtained prior to the approval of the Final Map or the issuance of Grading, Demolition, or P-job permits.

U. Parking meters may be required for the new parking space along Village Drive and the Frontage Road. Obstruction permits for any existing parking meter removal shall be obtained prior to obtaining Grading, Demolition, or P-job permits.

V. Copies of utility agreements regarding relocation shall be provided to the City prior to approval of the Final Map or issuance of any permits.

W. Obtain approval from the City for the location of the joint trench and utility boxes.

X. Fire Department approval of fire flows and access is required.

Y. Shoring and/or tie-backs used in construction may require Major Encroachment permits if they encroach into the public right-of-way.

Z. Utility vaults may require Major Encroachment permits.

AA. Obtain a Tree Removal Permit from the City before removing any trees.

BB. Note, new and/or revised storm water and Title 24 regulations are in affect. The designer will be required to provide a project design that meets the new regulations.

CC. Provide documentation including photographs showing the condition of the improvements with in the public right-of-way including curb, gutter, and sidewalk. If repairs or improvements are required, work shall be included in a P-job permit and a signed Subdivision Improvement Agreement.

DD. The roadway structural pavement section of all emergency vehicle access roadways or sidewalks shall be designed to structurally support a fire truck vehicle. Coordinate the design criteria with the City.

EE. A portion of Frontage Road contains a 30-wide shuttle bus area. The 30-foot wide shuttle stop area is acceptable to the City providing that the applicant install curbside signing in the stop area requiring shuttle bus drivers to remain with their buses at all times. Exact wording shall be coordinated with the City.

FF. The applicant has stated that the EVAE area immediately south of the proposed garage is for the use of emergency vehicles and pedestrians only. No other vehicular traffic will be using the EVAE. The City requires a 26-foot wide EVAE throughout this area. The EVAE can be utilized as both a pedestrian path and an emergency vehicle access roadway. Fire department approved bollards shall be placed at both ends of this area and the roadway pavement section designed as stated above.

GG. The following shall be included on the revised TTM:

This Tentative Map vests the right to create the parcels shown and to develop them to up to the total number of units indicated. Each individual parcel shall be required to conform to the applicable Building and Fire Codes at the time the application for Building Permit is filed. Additionally each parcel shall conform to the project conditions of approval which further define project requirements.

Parcels B1 & B2 - to ensure code compliance three scenarios/options are envisioned for these parcels.

Option 1	Develop as a single lot with fire access on the west, north, and east sides. Entrance driveway off the east side. Construction type to be determined at the time of building permit application.

Option 2	Develop as two lots with a 26 foot wide emergency vehicle access easement located between the lots. The easement shall be 1/3 the total depth of the lot and be accessed from the east. The buildings shall each have a three hour rated wall along the shared property line. Fire access shall be provided along the west and east sides of both parcels and on the north side of parcel B2. Entrance driveway(s) will be off the east side
Option 3	Develop as two lots with fire access on the west and east sides of both parcels. Parcel B2 will have access on the north side as well. Building setbacks and the specific construction type will be determined at the time of building permit application in such a manner as to comply with the applicable building and fire codes.

Parcels D & C1 - to ensure code compliance three scenarios/options are envisioned for these parcels.

Option 1	Fire access on the west side of both parcels with access on the north side of parcel C1. Provide a 26 foot wide emergency vehicle access easement located between the lots for approximately 90% of the depth of the lot.
Option 2	Fire access on the west side of both parcels with access on the north side of parcel C1. Building setbacks and the specific construction type will be determined at the time of building permit application in such a manner as to comply with the applicable building and fire codes. In the event the parcels are combined the easement would be removed.

EBMUD CONDITIONS:

7. Comply with attached EBMUD conditions.

EBMUD

REVIEW OF AGENCY PLANNING APPLICATION

THIS IS NOT A PROPOSAL TO PROVIDE WATER SERVICES

The technical data supplied herein is based on preliminary information, is subject to revision and is to be used for planning purposes only.

DATE: 10/05/2010	EBMUD MAP(S): 1488B488,1488B486	EBMUD FILE:S-9211
AGENCY: City of Oakland Planning and Zoning Services Division Attn: Catherine Payne 250 Frank Ogawa Plaza, Suite 2114 OAKLAND, CA 94612	AGENCY FILE: TTM8047	FILE TYPE: Tentative Map
APPLICANT: MacArthur Community Transit Partners, LLC 345 Spear Street, 7th Floor San Francisco , CA 94105		OWNER: Bay Area Rapid Transit District P.O. Box # 12688 Oakland, CA 94604

DEVELOPMENT DATA

ADDRESS/LOCATION: 515 Apgar Street City:OAKLAND Zip Code: 94609

ZONING:Mixed-Use PREVIOUS LAND USE: Parking/Commercial/Residential

DESCRIPTION: Applicant requests approval of tentative map for an 11-lot subdivision of parcels located on the west side of Telegraph Avenue, between 40th Street and West MacArthur Boulevard.

TOTAL ACREAGE:7.74 ac.

TYPE OF DEVELOPMENT:

Other:297950 Sqft

WATER SERVICES DATA

PROPERTY: in EBMUD	ELEVATION RANGES OF STREETS: 68-81	ELEVATION RANGE OF PROPERTY TO BE DEVELOPED: 68-81

All of development may be served from existing main(s)
Location of Main(s):

PRESSURE ZONE	SERVICE ELEVATION RANGE

All of development must be served from main extension(s)
Location of Existing Main(s):40th Street, W. MacArthur Boulevard, & Telegraph Avenue

PRESSURE ZONE	SERVICE ELEVATION RANGE
G0A3	0-100

COMMENTS

Main extensions, at the project sponsor's expense, will be required to serve the proposed development. Off-site pipeline improvements, also at the project sponsor's expense, may be required to meet domestic demands and fire flow requirements set by the local fire department. Off-site pipeline improvements include, but are not limited to, replacement of existing water mains to the project site.

EBMUD owns and operates 6-inch water mains located in 39th Street and Apgar Street that provide service to EBMUD customers in the area. The integrity of these pipelines must be maintained at all times. Any proposed construction activity in 39th Street and Apgar Street needs to be coordinated with EBMUD and may require relocation of the water mains, at the project sponsor's expense.

When the development plans are finalized, the project sponsor should contact EBMUD's New Business Office and request a water service estimate to determine the costs and conditions of providing water service to the development. Engineering and installation of water mains, off-site pipeline improvements and meters requires substantial lead time, which should be provided for in the project sponsor's development schedule. No water meters are allowed to be located in driveways. Due to EBMUD's limited water supply, all customers should plan for shortages in time of drought.

ELE

cc: Vimal & Jignashaben Desai, 526 W. MacArthur Blvd., Oakland, CA 94609
Jagnishkumar Bhikhabbai Patel, 544 W. MacArthur Blvd., Oakland, CA 94609
Yeu Bin Wu and Tsui Ying Shen, 3919 Telegraph Ave., Oakland, CA 94609

CHARGES & OTHER REQUIREMENTS FOR SERVICE:
Contact the EBMUD New Business Office at (510)287-1008.

David J Rehnstrom 10/5/10

David J Rehnstrom,Senior Civil Engineer; DATE
WATER SERVICE PLANNING SECTION

MacArthur Transit Village Project Stage 1 Final Development Permit (PUDF10097) Additional Conditions of Approval adopted by the City Council on April 5, 2011

8. **The following conditions have been voluntarily agreed to by the project sponsor pursuant to discussions with the representatives of the Alta Bates Summit Surgery Center and are not intended to be, nor are they, mitigation measures for any element of the MacArthur Transit Village Project under the California Environmental Quality Act. Rather, these additional conditions will further reduce the construction related impacts that the Project EIR describes as less than significant for purposes of the California Environmental Quality Act. These conditions shall apply only for so long as the Alta Bates Summit Surgery Center is in operation at its current location on Telegraph Avenue between Apgar and 39th Streets.**

A. The following updated and additional City Standard Conditions of Approval ("SCA") shall apply to each Final Development Plan for the MacArthur Transit Village Project:

1) Construction-Related Air Pollution Controls (Dust and Equipment Emissions)

Ongoing throughout demolition, grading, and/or construction
During construction, the project applicant shall require the construction contractor to implement all of the following applicable measures recommended by the Bay Area Air Quality Management District (BAAQMD):

BASIC

a) Water all exposed surfaces of active construction areas at least twice daily (using reclaimed water if possible). Watering should be sufficient to prevent airborne dust from leaving the site. Increased watering frequency may be necessary whenever wind speeds exceed 15 miles per hour. Reclaimed water should be used whenever possible.
b) Cover all trucks hauling soil, sand, and other loose materials or require all trucks to maintain at least two feet of freeboard (i.e., the minimum required space between the top of the load and the top of the trailer).
c) All visible mud or dirt track-out onto adjacent public roads shall be removed using wet power vacuum street sweepers at least once per day. The use of dry power sweeping is prohibited.
d) Pave all roadways, driveways, sidewalks, etc. as soon as feasible. In addition, building pads should be laid as soon as possible after grading unless seeding or soil binders are used.
e) Enclose, cover, water twice daily or apply (non-toxic) soil stabilizers to exposed stockpiles (dirt, sand, etc.).
f) Limit vehicle speeds on unpaved roads to 15 miles per hour.
g) Idling times shall be minimized either by shutting equipment off when not is use or reducing the maximum idling time to five minutes (as required by the California airborne toxics control measure Title 13, Section 2485, of the California Code of Regulations. Clear signage to this effect shall be provided for construction workers at all access points.
h) All construction equipment shall be maintained 0.and properly tuned in accordance with the manufacturer's specifications. All equipment shall be checked by a certified mechanic and determined to be running in proper condition prior to operation.

i) Post a publicly visible sign that includes the contractor's name and telephone number to contact regarding dust complaints. When contacted, the contractor shall respond and take corrective action within 48 hours. The telephone numbers of contacts at the City and the BAAQMD shall also be visible. This information may be posted on other required on-site signage.

ENHANCED: All "Basic" controls listed above plus the following controls:

j) All exposed surfaces shall be watered at a frequency adequate to maintain minimum soil moisture of 12 percent. Moisture content can be verified by lab samples or moisture probe.
k) All excavation, grading, and demolition activities shall be suspended when average wind speeds exceed 20 mph.
l) Install sandbags or other erosion control measures to prevent silt runoff to public roadways.
m) Hydroseed or apply (non-toxic) soil stabilizers to inactive construction areas (previously graded areas inactive for one month or more).
n) Designate a person or persons to monitor the dust control program and to order increased watering, as necessary, to prevent transport of dust offsite. Their duties shall include holidays and weekend periods when work may not be in progress.
o) Install appropriate wind breaks (e.g., trees, fences) on the windward side(s) of actively disturbed areas of the construction site to minimize wind blown dust. Wind breaks must have a maximum 50 percent air porosity.
p) Vegetative ground cover (e.g., fast-germinating native grass seed) shall be planted in disturbed areas as soon as possible and watered appropriately until vegetation is established.
q) The simultaneous occurrence of excavation, grading, and ground-disturbing construction activities on the same area at any one time shall be limited. Activities shall be phased to reduce the amount of disturbed surfaces at any one time.
r) All trucks and equipment, including tires, shall be washed off prior to leaving the site.
s) Site accesses to a distance of 100 feet from the paved road shall be treated with a 6 to 12 inch compacted layer of wood chips, mulch, or gravel.
t) Minimize the idling time of diesel-powered construction equipment to two minutes.
u) The project applicant shall develop a plan demonstrating that the off-road equipment (more than 50 horsepower) to be used in the construction project (i.e., owned, leased, and subcontractor vehicles) would achieve a project wide fleet-average 20 percent NOx reduction and 45 percent particulate matter (PM) reduction compared to the most recent California Air Resources Board (CARB) fleet average. Acceptable options for reducing emissions include the use of late model engines, low-emission diesel products, alternative fuels, engine retrofit technology, after-treatment products, add-on devices such as particulate filters, and/or other options as they become available.

v) Use low VOC (i.e., ROG) coatings beyond the local requirements (i.e., BAAQMD Regulation 8, Rule 3: Architectural Coatings).
w) All construction equipment, diesel trucks, and generators shall be equipped with Best Available Control Technology for emission reductions of NOx and PM.
x) Off-road heavy diesel engines shall meet the CARB's most recent certification standard.

2) Operational Noise-General
Ongoing.
Noise levels from the activity, property, or any mechanical equipment on site shall comply with the performance standards of Section 17.120 of the Oakland Planning Code and Section 8.18 of the Oakland Municipal Code. If noise levels exceed these standards, the activity causing the noise shall be abated until appropriate noise reduction measures have been installed and compliance verified by the Planning and Zoning Division and Building Services.

B. The following Project Specific Conditions of Approval shall apply to each Final Development Plan for the MacArthur Village Project:

1) The project applicant shall implement all of the plans and recommendations described in the following reports prepared for the project attached as Attachment C (CEQA Memo) to the City Council's Agenda Report dated April 5, 2011, copies of which are on file with the City Planning Department: (i) LSA Associates, Inc. dated March 11, 2011 regarding air quality, (ii) LSA Associates, Inc. dated March 11, 2011 regarding noise, and (iii) Wilson Ihrig & Associates dated March 10, 2011 regarding vibration. To the extent this section B.1 conflicts with section B.4 below, the provisions of section B.4 shall be controlling. The recommendations in these reports include without limitation:

Vibration

(a) The contractors shall implement the Construction Equipment Schedule elements described in the March 10, 2011 letter report prepared by Wilson Ihrig & Associates, attached as Exhibit H to the March 14, 2011 Memorandum from Urban Planning Partners to Eric Angstadt and Catherine Payne and included in the Agenda Report for the April 5, 2011 City Council hearing on the Stage 1 FDP (PUDF10097) and VTTM (8047).

(b) Vibration monitoring shall be conducted at the Surgery Center to document the baseline conditions during operations prior to construction and to monitor the vibration at the facilities during the key periods of construction that are subject to vibration to verify that construction-related vibration is not exceeding the FTA category 1 criterion. The key periods of construction would occur when the vibrating roller compactors, vibrating plate compactors, jumping jack, or other equipment that generates vibration are in operation adjacent to the Surgery Center.

Noise

(c) Prior to initiation of on-site construction-related earthwork activities, a minimum 8-foot high temporary sound barrier shall be erected along the project property line abutting the residential sensitive land sues that are adjacent to the construction site on MacArthur Boulevard and Telegraph Avenue.

(d) Prior to initiation of on-site construction-related earthwork activities, a minimum 8-foot high temporary sound barrier shall be erected along the project property line abutting the Surgery Center that is adjacent to the construction site on Telegraph Avenue.

(e) The temporary sound barriers shall be constructed with a minimum surface weight of 4 pounds per square foot and shall be constructed so that vertical or horizontal gaps are eliminated; these temporary barriers shall remain in place through the construction phase in which heavy equipment, such as excavators, dozers, scrapers, loaders, rollers, pavers, and dump trucks are operating within 150 feet of the edge of the construction site by adjacent sensitive land uses.

(f) Whenever feasible, the project contractor shall encourage implementation of the following strategies throughout all phases of construction: use of smaller or quieter equipment; use of electric equipment in lieu of gasoline or diesel powered equipment; turn off all idling equipment when anticipated to not be in use for more than 5 minutes; minimize drop height when loading excavated materials onto trucks; minimize drop height when unloading or moving materials on-site; and sequence noisy activities to coincide with noisiest ambient hours.

(g) Noise monitoring is required for all construction activities that would be considered extreme noise generators, activities that would result in noise levels in excess of 90 dBA L_{max} as measured at the receiving property. Construction activities could exceed these levels at the residential land uses that border the construction site on MacArthur Boulevard and Telegraph Avenue. Pursuant to SCA NOI-5(e), noise monitoring to measure the effectiveness of noise attenuation measures shall be conducted as follows:

Noise measurements shall be conducted on a weekly basis during the phases associated with the anticipated activities for the months of May, June, and September and shall be conducted by a qualified acoustical consultant.

These measurements shall be taken during mid-morning and mid-afternoon hours when background noise levels are anticipated to be lowest so as to try to capture noise from only construction noise sources.

These measurements shall be taken at distances greater than 10 feet from the temporary sound barriers on the receptor property in order to determine the effectiveness of the sound barrier.

If exceedances are identified, then the on-site construction manager shall be notified and the equipment use shall be adjusted so that noise levels are reduced.

2) The temporary sound barrier to be erected by the project applicant along the project property

line abutting the adjacent surgery center property shall be a minimum of 8 feet high.

3) *Prior to issuance of a demolition, grading or building permit.* The project applicant shall retain a structural engineer or other appropriate professional to determine threshold levels of vibration and cracking that could damage buildings adjacent to the project site and design means and methods of construction that shall be utilized to not exceed the thresholds.

4) The noise and vibration reduction plan for each phase of the project prepared pursuant to SCA NOI-5 shall also:

(i) include documentation of the following:

- existing baseline conditions at the anticipated construction monitoring locations near the adjacent surgery center, supported by measurements of ambient noise and vibration levels near the adjacent surgery center over a 6-day continuous period (Monday-Saturday);
- characterization of the existing vibration environment within representative vibration sensitive spaces at the adjacent surgery center to confirm whether the FTA Category 1 criterion is applicable for these interior spaces, or whether a higher threshold is more appropriate. This characterization will be supported by measurements of the existing ambient vibration levels over a 48-hour continuous period measured during the work week (M-F). If the existing environment is comparable or less than the FTA Category 1 threshold, then the construction work will be limited by the FTA Category 1 criterion. If it is determined that the existing ambient environment exceeds the FTA Category 1 criterion, then site specific criteria will be developed based on the characteristics of the measured environment, including the maximum vibration levels and the measured frequency of occurrence of vibration levels;
- vibration testing to determine how groundborne vibration will propagate from the construction area (based upon simulated construction activities testing) to the surgery center building and anticipated construction monitoring locations. This information will be used to determine the vibration level offset between outdoor construction monitoring locations and the vibration experienced at the interior of the building, to refine the calculations previously done to determine the site-specific vibration from construction, to determine the types of construction activity for which monitoring is required and to determine applicable distances for monitoring purposes pursuant to item (v) below; and
- All such noise and vibration testing and determinations of baselines and monitoring locations near the adjacent surgery center shall be coordinated with the surgery center or its designee.

(ii) include appropriate measures to ensure that the project construction and operations comply with the City's noise and vibration performance standards in Section 17.120.050 of the Oakland Planning Code, the City's vibration performance standards in Section 17.120.060 of the Oakland Planning Code, and the vibration criteria confirmed above, as measured at the monitoring locations specified in (v);

(iii) provide that all noise and vibration compliance monitoring be performed by one or more qualified consultants;

(iv) prohibit the use of pile driving as part of the construction of the BART

Parking Garage and construction on Parcel D;

(v) require noise and vibration measurements, for compliance purposes, to be performed for a minimum of 48 hours during a continuous period each week during the conduct of construction activities for which monitoring is required as identified pursuant to the pre-vibration testing protocol under item (i) above within applicable distances from the façade of the surgery center building nearest to the construction activity as such distances are identified as part of such testing protocol.. Such measurements shall be made at the nearest façade or at an equivalent distance from the construction activity to the nearest façade as determined appropriate by the qualified acoustical consultant in order to accurately determine noise and vibration levels at the nearest façade of the surgery center from project-related construction activities; and

(vi) require a copy of the City approved noise and vibration plan to be provided to the designated representative of the adjacent surgery center.

5) The special inspection deposit required pursuant to SCA Noise-5 shall also include an amount sufficient to ensure compliance with project conditions of approval governing air quality.

6) Prior to the start of construction activities, the project applicant shall designate an on-site complaint and enforcement manager, with supervisory authority with respect to construction activity, who shall immediately respond to any complaints or concerns raised by the designated representative of the adjacent surgery center related to air quality, noise, vibration, or any other aspect of project construction activities, and provide to the surgery center representative the contact information for such complaint and enforcement manager.

7) Project applicant shall promptly provide to the designated representative of the adjacent surgery center copies of all noise, vibration and air quality monitoring reports required by all project conditions of approval, including, without limitation, all monitoring reports required pursuant to project specific condition 4 above, and the recommendations in the following reports: (i) LSA Associates, Inc. dated March 11, 2011 regarding air quality, (ii) LSA Associates, Inc. dated March 11, 2011 regarding noise, and (iii) Wilson Ihrig & Associates dated March 10, 2011 regarding vibration. If any such report indicates that the project is not in compliance with any such mitigation measures or conditions of approval or if the project is otherwise not in compliance therewith, the project applicant shall immediately cease the activity causing such non-compliance and take such other measures that may be necessary to prevent the recurrence of such non-compliance.

8) The project applicant shall not restrict, block, relocate, modify, or otherwise hinder vehicular and pedestrian access (ingress and egress) to the adjacent surgery center property from its existing driveways and sidewalks access points on Apgar Street and 39th Street both during and after construction of the project without 48 hours advance notice to the surgery center. In no event shall such access be disrupted for more than two days in any M-F period, except for improvements to Apgar Street or 39th Street. For any period during which the 39the Street parking areas in the Surgery Center property are rendered inaccessible, project applicant shall provide an equal number of substitute parking spaces in the BART parking lot area, and/or the new BART parking garage, as close as feasible to the Surgery Center and at no cost to the Surgery Center. The applicant shall coordinate temporary disruptions to the surgery center's vehicular and pedestrian access points and shall maintain one point of access via Apgar Street or Telegraph Street at all times.

9) The applicant's contractors will limit idling, loading or staging on Apgar Street, 39th Street, and Telegraph Avenue adjacent to the property and provide the surgery center at least 48 hours

notice of such planned activity.

EXHIBIT M

CITY OF OAKLAND MITIGATION MONITORING & REPORTING PROGRAM

Contractor must meet the provisions of the project's Mitigation Monitoring and Reporting program per the attached document dated May, 2008.

- City of Oakland Mitigation and Monitoring & Reporting Program, 54 Pages

EXHIBIT C-1

MITIGATION MONITORING AND REPORTING PROGRAM

This Mitigation Monitoring and Reporting Program (MMRP) was formulated based on the findings of the Environmental Impact Report (EIR) prepared for the MacArthur Transit Village project in the City of Oakland. This MMRP is in compliance with Section 15097 of the *CEQA Guidelines*, which requires that the Lead Agency "adopt a program for monitoring or reporting on the revisions which it has required in the project and the measures it has imposed to mitigate or avoid significant environmental effects." The MMRP lists mitigation measures recommended in the EIR and identifies mitigation monitoring requirements.

Table 1 presents the mitigation measures identified in the MacArthur Transit Village EIR necessary to mitigate potentially significant impacts. Each mitigation measure is numbered according to the topical section to which it pertains in the EIR. As an example, Mitigation Measure TRANS-1 is the first mitigation measure identified in the EIR for the MacArthur Transit Village. The City's Standard Conditions of Approval identified in the EIR as measures that would minimize potential adverse effects that could result from implementation of the project are also included in this MMRP to ensure the conditions are implemented and monitored. The Standard Conditions are identified with a COA prefix (e.g., COA TRANS-1).

The first column of Table 5-1 identifies the Standard Condition of Approval or Mitigation Measure. The second column identifies the monitoring schedule or timing, while the third column names the party responsible for monitoring the required action. The fourth column, "Monitoring Procedure," outlines the steps for monitoring the action identified in the mitigation measure. The fifth and sixth columns deal with reporting and provide spaces for comments and dates and initials. These last columns will be used by the City to ensure that individual mitigation measures have been monitored.

Mitigation Monitoring and Reporting Program

Standard COA/MM	Mitigation Monitoring			Reporting	
	Monitoring Schedule	Monitoring Responsibility	Monitoring Procedure	Comments	Date/ Initials
A. LAND USE					
No significant land use impacts would occur.					
B. PUBLIC POLICY					
No significant public policy impacts were identified and no mitigation measures were identified in the EIR. The following SCOA is included to ensure no significant impacts occur..					
COA POLICY-1: To the extent feasible, removal of any tree and/or other vegetation suitable for nesting of raptors shall not occur during the breeding season of March 15 and August 15. If tree removal must occur during the breeding season, all sites shall be surveyed by a qualified biologist to verify the presence or absence of nesting raptors or other birds. Pre-removal surveys shall be conducted within 15 days prior to start of work from March 15 through May 31, and within 30 days prior to the start of work from June 1 through August 15. The pre-removal surveys shall be submitted to the Planning and Zoning Division and the Tree Services Division of the Public Works Agency. If the survey indicates the potential presences of nesting raptors or other birds, the biologist shall determine an appropriately sized buffer around the nest in which no work will be allowed until the young have successfully fledged. The size of the nest buffer will be determined by the biologist in consultation with the CDFG, and will be based to a large extent on the nesting species and its sensitivity to disturbance. In general, buffer sizes of 200 feet for raptors and 50 feet for other birds should suffice to prevent disturbance to birds nesting in the urban environment, but these buffers may be increased or decreased, as appropriate, depending on the bird species and the level of disturbance anticipated near the nest.	Prior to the issuance of a tree removal permit	City of Oakland Planning and Zoning Division	Verify that tree removal will not occur during the breeding season of March 15 and August 15. If tree removal must occur during the breeding season, verify that the required pre-removal surveys have been conducted, provided to the Planning and Zoning Division, and if necessary an adequate nest buffer is implemented.		

Mitigation Monitoring and Reporting Program

Standard COA/MM	Mitigation Monitoring			Reporting	
	Monitoring Schedule	Monitoring Responsibility	Monitoring Procedure	Comments	Date/ Initials
C. TRANSPORTATION, CIRCULATION AND PARKING					
COA TRANS-1: Prior to the issuance of each building permit, the project sponsor and construction contractor shall meet with the Transportation Services Division and other appropriate City of Oakland agencies to determine traffic management strategies to reduce, to the maximum extent feasible, traffic congestion and the effects of parking demand by construction workers during construction of this project and other nearby projects that could be simultaneously under construction. The project sponsor shall develop a construction management plan for review and approval by the City Transportation Services Division. The plan shall also be submitted to BART and AC Transit for review and comment. The plan shall include at least the following items and requirements: • A set of comprehensive traffic control measures, including scheduling of major truck trips and deliveries to avoid peak traffic hours, detour signs if required, lane closure procedures, signs, cones for drivers, and designated construction access routes. • Notification procedures for adjacent property owners and public safety personnel regarding when major deliveries, detours, and lane closures will occur. • Location of construction staging areas for materials, equipment, and vehicles (must be located on the project site).	Prior to commencing each phase of construction	City of Oakland , CEDA, Transportation Services Division	Verify that the Construction Management Plan has been prepared and that it meets the standards listed in the mitigation measure.		

Mitigation Monitoring and Reporting Program

Standard COA/MM	Mitigation Monitoring			Reporting	
	Monitoring Schedule	Monitoring Responsibility	Monitoring Procedure	Comments	Date/ Initials
• Identification of haul routes for movement of construction vehicles that would minimize impacts on vehicular and pedestrian traffic, circulation and safety; and provision for monitoring surface streets used for haul routes so that any damage and debris attributable to the haul trucks can be identified and corrected by the project applicant. • Temporary construction fences to contain debris and material and to secure the site. • Provisions for removal of trash generated by project construction activity. • A process for responding to, and tracking, complaints pertaining to construction activity, including identification of an on-site complaint manager. • Subject to City review and approval, prior to start of construction, a construction worker transportation demand management (TDM) program shall be implemented to encourage construction workers to carpool or use alternative transportation modes in order to reduce the overall number of vehicle trips associated with construction workers. • Identification and maintenance of vehicular, bicycle, pedestrian and transit access to and from the BART Station. It is anticipated that this Construction Traffic Management Plan would be developed in the context of a larger Construction Management Plan, which would address other issues such as hours of construction on-site, limitations on noise and dust emissions, and other applicable items.					

Mitigation Monitoring and Reporting Program

Standard COA/MM	Mitigation Monitoring			Reporting	
	Monitoring Schedule	Monitoring Responsibility	Monitoring Procedure	Comments	Date/ Initials
Mitigation Measure TRANS-1: Optimize signal timing (i.e., adjust the allocation of green time for each intersection approach) at the Telegraph Avenue/51st Street intersection and coordinate signal phasing and timing with the adjacent Telegraph Avenue/52nd Street and Claremont Avenue intersection and other intersections in the same coordination group. To implement this measure, the project sponsor shall submit a signal optimization plan to City of Oakland Transportation Services Division for review and approval. The plan shall consist of signal timing parameters for the signals in the coordination group. The project sponsor shall fund the cost of preparing and implementing the plan.	Submit plan prior to the issuance of first building permit; Implement signal optimization measures according to timing outlined in approved plan	City of Oakland , CEDA, Transportation Services Division	• Verify that the Signal Optimization Plan has been prepared and that it meets the standards listed in the mitigation measure. • Verify that the project sponsor funds the cost of preparing and implementing the Signal Optimization Plan. • Ensure plan measures are being implemented.		

Mitigation Monitoring and Reporting Program

Standard COA/MM	Mitigation Monitoring			Reporting	
	Monitoring Schedule	Monitoring Responsibility	Monitoring Procedure	Comments	Date/ Initials
Mitigation Measure TRANS-2: Change the signal cycle length to 90 seconds and optimize signal timing (i.e., adjust the allocation of green time for each intersection approach) at the Market Street/MacArthur Boulevard intersection. To implement this measure, the project sponsor shall submit a signal optimization plan to City of Oakland Transportation Services Division for review and approval. The plan shall consist of signal timing parameters for the Market Street/MacArthur Boulevard intersection. The project sponsor shall fund the cost of preparing and implementing the plan.	Submit plan prior to the issuance of first building permit; Implement signal optimization measures according to timing outlined in approved plan	City of Oakland , CEDA, Transportation Services Division	• Verify that the Signal Optimization Plan has been prepared and that it meets the standards listed in the mitigation measure. • Verify that the project sponsor funds the cost of preparing and implementing the Signal Optimization Plan. • Ensure plan measures are being implemented.		

Mitigation Monitoring and Reporting Program

Standard COA/MM	Mitigation Monitoring			Reporting	
	Monitoring Schedule	Monitoring Responsibility	Monitoring Procedure	Comments	Date/ Initials
Mitigation Measure TRANS-3: Implement the following measures: • Prohibit left-turns from northbound Telegraph Avenue into westbound 52nd Street during the peak commute times (i.e., 7:00 a.m. to 9:00 a.m. and 4:00 p.m. to 6:00 p.m.). Currently, a small volume of traffic uses this movement (about 10 peak hour vehicles), which can be diverted to 51st Street. Thus, the peak hour prohibition on left-turns would not result in excessive and circuitous diversions. • Change signal cycle length to 120 seconds and optimizing signal timing (i.e., adjust the allocation of green time for each intersection approach) at the Telegraph Avenue/52nd Street and Claremont Avenue intersection; coordinate signal timing and phasing with the adjacent Telegraph Avenue/51st Street intersection and other intersections in the same coordination group. To implement these measures, the project sponsor shall submit the following to City of Oakland Transportation Services Division for review and approval: • Signing plans to prohibit left-turns from northbound Telegraph Avenue into westbound 52nd Street. • Signal timing plans for the signals in the coordination group. The project sponsor shall fund the cost of preparing and implementing these plans.	Submit plans prior to the issuance of first building permit; Implement measures according to timing outlined in approved plan	City of Oakland , CEDA, Transportation Services Division	• Verify that the signing plans to prohibit left-turns from northbound Telegraph Avenue into westbound 52nd Street have been adequately prepared. • Verify that the signal timing plans for the signals in the coordination group have been adequately prepared. • Ensure plan measures are being implemented.		

Mitigation Monitoring and Reporting Program

Standard COA/MM	Mitigation Monitoring			Reporting	
	Monitoring Schedule	Monitoring Responsibility	Monitoring Procedure	Comments	Date/ Initials
Mitigation Measure TRANS-4: Implement the following measures: • Change signal cycle length to 120 seconds and optimize signal timing (i.e., adjust the allocation of green time for each intersection approach) at the Telegraph Avenue/51st Street intersection and coordinate signal phasing and timing with the adjacent Telegraph Avenue/52nd Street and Claremont Avenue intersection and other intersections in the same coordination group. To implement this measure, the project sponsor shall submit a signal optimization plan to City of Oakland Transportation Services Division for review and approval. The plan shall consist of signal timing parameters for the signals in the coordination group. The project sponsor shall fund the cost of preparing and implementing the plan.	Submit plan prior to the issuance of first building permit; Implement signal optimization measures according to timing outlined in approved plan	• City of Oakland , CEDA, Transportation Services Division	• Verify that the Signal Optimization Plan has been prepared and that it meets the standards listed in the mitigation measure.		

Mitigation Monitoring and Reporting Program

Standard COA/MM	Mitigation Monitoring			Reporting	
	Monitoring Schedule	Monitoring Responsibility	Monitoring Procedure	Comments	Date/ Initials
• To help further minimize impacts at this intersection, a Transportation Demand Management (TDM) program shall be implemented at the project site to encourage more residents and employees to shift from driving alone to other modes of travel. Potential TDM measures may include, but are not limited to, transit ticket subsidies, awareness programs, direct transit sales, providing a guaranteed ride home program, and parking management strategies. The effectiveness of the TDM program shall be regularly monitored, and if necessary adjusted to meet its goals. The project applicant shall submit the TDM program to the City for its review and approval. The plan shall also be submitted to BART for review and comment. The project applicant shall also be responsible for funding and implementing the TDM program. The components of the proposed TDM program have not been finalized. Additionally, it is difficult to accurately predict a TDM program's effectiveness and to quantify the effects on reducing project trip generation. To present a conservative analysis, this study assumes that the intersection would continue to operate at LOS F with the implementation of this mitigation measure. Thus, these measures will partially mitigate the impact, but are not sufficient to mitigate the impact to a less-than-significant level.	Submit TDM Plan prior to the issuance of first building permit; Implement measures according to timeframes outlined in approved plan	• City of Oakland Transportation Services Division	• Review Transportation Demand Management Program for adequacy and review regular monitoring reports regarding program effectiveness. • Ensure plan and program measures are being implemented.		

Mitigation Monitoring and Reporting Program

Standard COA/MM	Mitigation Monitoring			Reporting	
	Monitoring Schedule	Monitoring Responsibility	Monitoring Procedure	Comments	Date/ Initials
Mitigation Measure TRANS-5: Optimize signal timing (i.e., adjust the allocation of green time for each intersection approach) at the West Street/40th Street intersection. To implement this measure, the project sponsor shall submit a signal optimization plan to City of Oakland Transportation Services Division for review and approval. The plan shall consist of signal timing parameters for the West Street/40th Street intersection. The project sponsor shall fund the cost of preparing and implementing the plan.	Submit plan prior to the issuance of first building permit; Implement signal optimization measures according to timing outlined in approved plan	City of Oakland , CEDA, Transportation Services Division	• Verify that the Signal Optimization Plan has been prepared and that it meets the standards listed in the mitigation measure. • Ensure plan and program measures are being implemented.		

Mitigation Monitoring and Reporting Program

Standard COA/MM	Mitigation Monitoring			Reporting	
	Monitoring Schedule	Monitoring Responsibility	Monitoring Procedure	Comments	Date/ Initials
Mitigation Measure TRANS-6: Implement the following measures: • Provide protected/permitted left-turn phasing on eastbound and westbound 40th Street approaches. • Change signal cycle length to 120 seconds in the AM peak and 105 seconds during the PM peak hour, and optimize signal timing (i.e., adjust the allocation of green time for each intersection approach) at the Telegraph Avenue/40th Street intersection. The change in signal cycle length may also require coordination with other intersections in the same coordination group. To implement these measures, the project sponsor shall submit the following to City of Oakland Transportation Services Division for review and approval: • Plans, Specifications, and Estimates (PS&E) to modify intersection to provide left-turn phasing on eastbound and westbound 40th Street approaches. • Signal timing plans for the signals in the coordination group. The project sponsor shall fund the cost of preparing and implementing these plans.	Prior to the issuance of first building permit; Modify intersection and signal timing in accordance with approved plan	City of Oakland , CEDA, Transportation Services Division	• Verify that the Plans, Specifications, and Estimates (PS&E) to modify intersection to provide left-turn phasing on eastbound and westbound 40th Street approaches have been adequately prepared. • Verify that signal timing plans for the signals in the coordination group have been adequately prepared. • Ensure plan measures are being implemented.		

Mitigation Monitoring and Reporting Program

Standard COA/MM	Mitigation Monitoring			Reporting	
	Monitoring Schedule	Monitoring Responsibility	Monitoring Procedure	Comments	Date/ Initials
Mitigation Measure TRANS-7: The impact shall be mitigated by the following: • Stripe a left-turn lane on northbound Market Street at MacArthur Boulevard. The left-turn lane can be accommodated within the existing right-of-way, but may result in loss of a few on-street parking and relocation of an AC Transit bus stop on northbound Market Street. • Change signal cycle length to 110 seconds during the AM peak hour and 90 seconds during the PM peak hour, and optimize signal timing (i.e., adjust the allocation of green time for each intersection approach) at the Market Street/MacArthur Boulevard intersection. To implement these measures, the project sponsor shall submit the following to City of Oakland Transportation Services Division for review and approval: • Plans, Specifications, and Estimates (PS&E) to stripe a left-turn lane on northbound Market Street at MacArthur Boulevard. • Signal timing plans for the Market Street/MacArthur Boulevard intersection. The project sponsor shall fund the cost of preparing and implementing these plans.	Submit plans prior to the issuance of first building permit; Implement measures according to timeframes outlined in approved plan	City of Oakland , CEDA, Transportation Services Division	• Verify that the Plans, Specifications, and Estimates (PS&E) to stripe a left-turn lane on northbound Market Street at MacArthur Boulevard have been adequately prepared. • Verify that the signal timing plans for the Market Street/MacArthur Boulevard intersection have been adequately prepared. • Ensure plan measures are being implemented.		

Mitigation Monitoring and Reporting Program

Standard COA/MM	Mitigation Monitoring			Reporting	
	Monitoring Schedule	Monitoring Responsibility	Monitoring Procedure	Comments	Date/ Initials
Mitigation Measure TRANS-8: Implement the following measures: • Provide protected/permitted left-turn phasing on northbound and southbound Telegraph Avenue approaches. • Change signal cycle length to 120 seconds and optimize signal timing (i.e., adjust the allocation of green time for each intersection approach) at the Telegraph Avenue/MacArthur Boulevard intersection. Signal phasing and timing shall also be coordinated with other intersections in the same coordination group. To implement this measure, the project sponsor shall submit the following to City of Oakland Transportation Services Division for review and approval: • Plans, Specifications, and Estimates (PS&E) to modify intersection to provide left-turn phasing on northbound and southbound Telegraph Avenue approaches. • Signal timing parameters for the signals in the coordination group. The project sponsor shall fund the cost of preparing and implementing the plan.	Submit plans prior to the issuance of first building permit; Implement measures according to timeframes outlined in approved plan	City of Oakland , CEDA, Transportation Services Division	• Verify that the Plans, Specifications, and Estimates (PS&E) to modify intersection to provide left-turn phasing on northbound and southbound Telegraph Avenue approaches have been adequately prepared. • Verify that the signal timing parameters for the signals in the coordination group have been adequately prepared. • Ensure plan measures are being implemented.		

Mitigation Monitoring and Reporting Program

Standard COA/MM	Mitigation Monitoring			Reporting	
	Monitoring Schedule	Monitoring Responsibility	Monitoring Procedure	Comments	Date/ Initials
Mitigation Measure TRANS-9: Implement the following measures: • To help further minimize impacts at this intersection, a Transportation Demand Management (TDM) program shall be implemented at the project site to encourage more residents and employees to shift from driving alone to other modes of travel. Potential TDM measures may include, but are not limited to, transit ticket subsidies, awareness programs, direct transit sales, providing a guaranteed ride home program, and parking management strategies. The effectiveness of the TDM program shall be regularly monitored, and if necessary adjusted to meet its goal. The project applicant shall submit the TDM program to the City for its review and approval. The plan shall also be submitted to BART for review and comment. The project applicant shall also be responsible for funding and implementing the TDM program. The components of the proposed TDM program have not been finalized. Additionally, it is difficult to accurately predict a TDM program's effectiveness and to quantify the effects on reducing project trip generation.	*See Mitigation Measure TRANS-4*				

Mitigation Monitoring and Reporting Program

Standard COA/MM	Mitigation Monitoring			Reporting	
	Monitoring Schedule	Monitoring Responsibility	Monitoring Procedure	Comments	Date/ Initials
D. AIR QUALITY					
COA AIR-1: Dust Control. *Prior to issuance of a demolition, grading, or building permit.* During construction, the project applicant shall require the construction contractor to implement the following measures required as part of BAAQMD basic and enhanced dust control procedures required for construction sites. These include: **BASIC (Applies to ALL construction sites)** a) Water all active construction areas at least twice daily. Watering should be sufficient to prevent airborne dust from leaving the site. Increased watering frequency may be necessary whenever wind speeds exceed 15 miles per hour. Reclaimed water should be used whenever possible. b) Cover all trucks hauling soil, sand, and other loose materials or require all trucks to maintain at least 2 feet of freeboard (i.e., the minimum required space between the top of the load and the top of the trailer). c) Pave, apply water three times daily, or apply (non-toxic) soil stabilizers on all unpaved access roads, parking areas and staging areas at construction sites. d) Sweep daily (with water sweepers using reclaimed water if possible) all paved access roads, parking areas and staging areas at construction sites. e) Sweep streets (with water sweepers using reclaimed water if possible) at the end of each day if visible soil material is carried onto adjacent paved roads. f) Limit the amount of the disturbed area at any one time, where feasible.	Ongoing throughout demolition, grading, and/or construction	City of Oakland, CEDA, Building Services Division	• Make regular visits to the project site to ensure that all dust-control mitigation measures are being implemented. • Verify that a designated dust control coordinator is on-call during construction periods.		

Mitigation Monitoring and Reporting Program

Standard COA/MM	Mitigation Monitoring			Reporting	
	Monitoring Schedule	Monitoring Responsibility	Monitoring Procedure	Comments	Date/ Initials
g) Suspend excavation and grading activity when winds (instantaneous gusts) exceed 25 mph. h) Pave all roadways, driveways, sidewalks, etc. as soon as feasible. In addition, building pads should be laid as soon as possible after grading unless seeding or soil binders are used. i) Replant vegetation in disturbed areas as quickly as feasible. j) Enclose, cover, water twice daily or apply (non-toxic) soil stabilizers to exposed stockpiles (dirt, sand, etc.). k) Limit traffic speeds on unpaved roads to 15 miles per hour. l) Clean off the tires or tracks of all trucks and equipment leaving any unpaved construction areas.					
ENHANCED (All "Basic" Controls listed above plus the following if the construction site is greater than 4 acres) a) All "Basic" controls listed above, plus: b) Install sandbags or other erosion control measures to prevent silt runoff to public roadways. c) Hydroseed or apply (non-toxic) soil stabilizers to inactive construction areas (previously graded areas inactive for one month or more). d) Designate a person or persons to monitor the dust control program and to order increased watering, as necessary, to prevent transport of dust offsite. Their duties shall include holidays and weekend periods when work may not be in progress. The name and telephone number of such person shall be provided to the BAAQMD prior to the start of construction as well as posted on-site over the duration of construction. e) Install appropriate wind breaks at the construction site to minimize wind blown dust.					

Mitigation Monitoring and Reporting Program

Standard COA/MM	Mitigation Monitoring			Reporting	
	Monitoring Schedule	Monitoring Responsibility	Monitoring Procedure	Comments	Date/ Initials
COA AIR-2: Construction Emissions. *Prior to issuance of a demolition, grading, or building permit.* To minimize construction equipment emissions during construction, the project applicant shall require the construction contractor to: a) Demonstrate compliance with BAAQMD Regulation 2, Rule 1 (General Requirements) for all portable construction equipment subject to that rule. BAAQMD Regulation 2, Rule 1, provides the issuance of authorities to construct and permits to operate certain types of portable equipment used for construction purposes (e.g., gasoline or diesel-powered engines used in conjunction with power generation, pumps, compressors, and cranes) unless such equipment complies with all applicable requirements of the "CAPCOA" Portable Equipment Registration Rule" or with all applicable requirements of the Statewide Portable Equipment Registration Program. This exemption is provided in BAAQMD Rule 2-1-105. b) Perform low- NOx tune-ups on all diesel-powered construction equipment greater than 50 horsepower (no more than 30 days prior to the start of use of that equipment). Periodic tune-ups (every 90 days) shall be performed for such equipment used continuously during the construction period.	Prior to issuance of a demolition, grading, or building permit; and ongoing throughout construction	City of Oakland, CEDA, Building Services Division	Verify that all construction equipment meets mitigation measures.		
E. NOISE AND VIBRATION					
COA NOISE-1: Days/Hours of Construction Operation. *Ongoing throughout demolition, grading, and/or construction.* The project applicant shall require construction contractors to limit standard construction activities as follows: a) Construction activities are limited to between 7:00 a.m. and 7:00 p.m. Monday through Friday, except that pile driving and/or other extreme noise generating activities greater than 90 dBA limited to between 8:00 a.m. and 4:00 p.m. Monday through Friday.	Ongoing throughout demolition, grading, and/or construction	City of Oakland, CEDA, Building Services Division	Make regular visits to the construction site to ensure that construction activities are restricted the hours designated in COA NOISE-1.		

Mitigation Monitoring and Reporting Program

Standard COA/MM	Mitigation Monitoring			Reporting	
	Monitoring Schedule	Monitoring Responsibility	Monitoring Procedure	Comments	Date/ Initials
b) Any construction activity proposed to occur outside of the standard hours of 7:00 a.m. to 7:00 p.m. Monday through Friday for special activities (such as concrete pouring which may require more continuous amounts of time) shall be evaluated on a case-by-case basis, with criteria including the proximity of residential uses and a consideration of resident's preferences for whether the activity is acceptable if the overall duration of construction is shortened and such construction activities shall only be allowed with the prior written authorization of the Building Services Division. c) Construction activity shall not occur on Saturdays, with the following possible exceptions: • Prior to the building being enclosed, requests for Saturday construction for special activities (such as concrete pouring which may require more continuous amounts of time), shall be evaluated on a case-by-case basis, with criteria including the proximity of residential uses and a consideration of resident's preferences for whether the activity is acceptable if the overall duration of construction is shortened. Such construction activities shall only be allowed on Saturdays with the prior written authorization of the Building Services Division. • After the building is enclosed, requests for Saturday construction activities shall only be allowed on Saturdays with the prior written authorization of the Building Services Division, and only then within the interior of the building with the doors and windows closed. d) No extreme noise generating activities (greater than 90 dBA) shall be allowed on Saturdays, with no exceptions.					

Mitigation Monitoring and Reporting Program

Standard COA/MM	Mitigation Monitoring			Reporting	
	Monitoring Schedule	Monitoring Responsibility	Monitoring Procedure	Comments	Date/ Initials
e) No construction activity shall take place on Sundays or Federal holidays. f) Construction activities include but are not limited to: truck idling, moving equipment (including trucks, elevators, etc.) or materials, deliveries, and construction meetings held on-site in a non-enclosed area.					
COA NOISE-2: Noise Control. *Ongoing throughout demolition, grading, and/or construction.* To reduce noise impacts due to construction, the project applicant shall require construction contractors to implement a site-specific noise reduction program, subject to city review and approval, which includes the following measures: a) Equipment and trucks used for project construction shall utilize the best available noise control techniques (e.g., improved mufflers, equipment redesign, use of intake silencers, ducts, engine enclosures and acoustically-attenuating shields or shrouds, wherever feasible). b) Except as provided herein, impact tools (e.g., jack hammers, pavement breakers, and rock drills) used for project construction shall be hydraulically or electrically powered wherever possible to avoid noise associated with compressed air exhaust from pneumatically powered tools. However, where use of pneumatic tools is unavoidable, an exhaust muffler on the compressed air exhaust shall be used; this muffler can lower noise levels from the exhaust by up to about 10 dBA. External jackets on the tools themselves shall be used if such jackets are commercially available, and this could achieve a reduction of 5 dBA. Quieter procedures shall be used, such as drills rather than impact equipment, whenever such procedures are available and consistent with construction procedures.	Ongoing throughout demolition, grading, and/or construction	City of Oakland, CEDA, Building Services Division	• Verify that a site-specific noise reduction program has been prepared and implemented. • Make regular visits to the construction site to ensure that noise from construction activities is appropriately controlled.		

Mitigation Monitoring and Reporting Program

Standard COA/MM	Mitigation Monitoring			Reporting	
	Monitoring Schedule	Monitoring Responsibility	Monitoring Procedure	Comments	Date/ Initials
c) Stationary noise sources shall be located as far from adjacent receptors as possible, and they shall be muffled and enclosed within temporary sheds, incorporate insulation barriers, or use other measures as determined by the City to provide equivalent noise reduction d) The noisiest phases of construction shall be limited to less than 10 days at a time. Exceptions may be allowed if the City determines an extension is necessary and all available noise reduction controls are implemented.					
COA NOISE-3: Noise Complaint Procedures. *Ongoing throughout demolition, grading, and/or construction.* Prior to the issuance of each building permit, along with the submission of construction documents, the project applicant shall submit to the City Building Services Division a list of measures to respond to and track complaints pertaining to construction noise. These measures shall include: a) A procedure and phone numbers for notifying the City Building Services Division staff and Oakland Police Department; (during regular construction hours and off-hours); b) A sign posted on-site pertaining with permitted construction days and hours and complaint procedures and who to notify in the event of a problem. The sign shall also include a listing of both the City and construction contractor's telephone numbers (during regular construction hours and off-hours); c) The designation of an on-site construction complaint and enforcement manager for the project;	Submit list prior to the issuance of a building permit; Ongoing throughout demolition, grading, and/or construction	City of Oakland, CEDA, Building Services Division	Verify the implementation of the list of measures to respond to and track complaints pertaining to construction noise.		

Mitigation Monitoring and Reporting Program

Standard COA/MM	Mitigation Monitoring			Reporting	
	Monitoring Schedule	Monitoring Responsibility	Monitoring Procedure	Comments	Date/ Initials
d) Notification of neighbors and occupants within 300 feet of the project construction area at least 30 days in advance of extreme noise generating activities about the estimated duration of the activity; and e) A preconstruction meeting shall be held with the job inspectors and the general contractor/on-site project manager to confirm that noise measures and practices (including construction hours, neighborhood notification, posted signs, etc.) are completed.					
COA NOISE-4: Interior Noise. *Prior to issuance of a building permit.* If necessary to comply with the interior noise requirements of the City of Oakland General Plan Noise Element and achieve an acceptable interior noise level, noise reduction in the form of sound-rated assemblies (i.e., windows, exterior doors, and walls) shall be incorporated into project building design, based upon recommendations of a qualified acoustical engineer. Final recommendations for sound-rated assemblies will depend on the specific building designs and layout of buildings on the site and shall be determined during the design phase; however, the following sound-rated assembly recommendations, based on the conceptual project layout and design (described in Chapter III, Project Description) should be included in the final study and will be included in the Standard Condition of Approval: An alternate form of ventilation, such as air conditioning systems, shall be included in the design for all units located within 659 feet of the centerline of SR-24, or within 153 feet of the centerline of 40th Street, or within 166 feet of the centerline of MacArthur Boulevard to ensure that widows can remain closed for prolonged periods of time to meet the interior noise standard and Uniform Building Code Requirements.	Submit noise recommend-ations prior to the issuance of a building permit for each phase of construction containing residential units Implement recommend ations according to timeframes outlined in plan	City of Oakland, CEDA, Building Services Division	Verify that appropriate sound-rated assemblies to reduce noise levels have been incorporated into the project building design.		

Mitigation Monitoring and Reporting Program

Standard COA/MM	Mitigation Monitoring			Reporting	
	Monitoring Schedule	Monitoring Responsibility	Monitoring Procedure	Comments	Date/ Initials
All residential building façades directly exposed to and within 240 feet of the centerline of SR-24 must be constructed to meet the interior DNL 45 dB requirement; this likely could be achieved with an overall STC-30 rating with windows having a minimum STC-34 rating. This could be achieved with a typical 1-inch insulated glazing assembly, possibly with one light being laminated (or other appropriate example assembly). Quality control must be exercised in construction to ensure all air-gaps and penetrations of the building shell are controlled and sealed.					
COA NOISE-5: Pile Driving and Other Extreme Noise Generators. *Ongoing throughout demolition, grading, and/or construction.* To further reduce potential pier drilling, pile driving and/or other extreme noise generating construction impacts greater than 90 dBA, a set of site-specific noise attenuation measures shall be completed under the supervision of a qualified acoustical consultant. Prior to commencing construction, a plan for such measures shall be submitted for review and approval by the City to ensure that maximum feasible noise attenuation will be achieved. This plan shall be based on the final design of the project. A third-party peer review, paid for by the project applicant, may be required to assist the City in evaluating the feasibility and effectiveness of the noise reduction plan submitted by the project applicant. The criterion for approving the plan shall be a determination that maximum feasible noise attenuation will be achieved. A special inspection deposit is required to ensure compliance with the noise reduction plan. The amount of the deposit shall be determined by the Building Official and the deposit shall be submitted by the project applicant concurrent	Submit plan prior commencing construction activities involving pile driving or other extreme noise generators; Implement measures according to timeframes outlined in the plan	City of Oakland, CEDA, Building Services Division	• Verify that a plan for reducing extreme noise generating construction impacts has been prepared. • Verify that the plan will achieve the maximum feasible noise attenuation. • Verify that a special inspection deposit has been submitted.		

Mitigation Monitoring and Reporting Program

Standard COA/MM	Mitigation Monitoring			Reporting	
	Monitoring Schedule	Monitoring Responsibility	Monitoring Procedure	Comments	Date/ Initials
with submittal of the noise reduction plan. The noise reduction plan shall include, but not be limited to, an evaluation of implementing the following measures. These attenuation measures shall include as many of the following control strategies as applicable to the site and construction activity: a) Erect temporary plywood noise barriers around the construction site, particularly along on sites adjacent to residential buildings; b) Implement "quiet" pile driving technology (such as pre-drilling of piles, the use of more than one pile driver to shorten the total pile driving duration), where feasible, in consideration of geotechnical and structural requirements and conditions; c) Utilize noise control blankets on the building structure as the building is erected to reduce noise emission from the site; d) Evaluate the feasibility of noise control at the receivers by temporarily improving the noise reduction capability of adjacent buildings by the use of sound blankets for example, and implement such measure if such measures are feasible and would noticeably reduce noise impacts; and e) Monitor the effectiveness of noise attenuation measures by taking noise measurements.					

Mitigation Monitoring and Reporting Program

Standard COA/MM	Mitigation Monitoring			Reporting	
	Monitoring Schedule	Monitoring Responsibility	Monitoring Procedure	Comments	Date/ Initials
COA NOISE-6: Demolition/Construction Adjacent to Historic Structures. The project applicant shall retain a structural engineer or other appropriate professional to determine threshold levels of vibration and cracking that could damage the buildings adjacent to the project site and design means and methods of construction that shall be utilized to not exceed the thresholds. Additionally, the project applicant shall submit a demolition plan for review and approval so as not to unduly impact neighboring property improvements particularly 505 40th Street. Neighboring property improvements within 10 of the project boundary shall be indicated on the demolition plan. The method of protection for any improvements within 5 feet of the project boundary shall be specifically addressed in the demolition plan. The applicant shall submit such engineering report and demolition plan and means of compliance with the engineering recommendations to the City (CEDA Building Services) for review and approval and implement the approved plan. f)	Prior to the issuance of a demolition, grading, or building permit for building A	City of Oakland, CEDA, Building Services Division	Verify that a structural engineer or other appropriate professional has determined the means and methods of construction will not exceed threshold levels of vibration that may damage buildings adjacent to the project site.		

Mitigation Monitoring and Reporting Program

Standard COA/MM	Mitigation Monitoring			Reporting	
	Monitoring Schedule	Monitoring Responsibility	Monitoring Procedure	Comments	Date/ Initials
F. HYDROLOGY AND WATER QUALITY					
COA HYDRO-1 (same as COA GEO-1): Erosion and Sedimentation Control Plan. *Prior to any grading activities.* a) The project applicant shall obtain a grading permit if required by the Oakland Grading Regulations pursuant to Section 15.04.780 of the Oakland Municipal Code. The grading permit application shall include an erosion and sedimentation control plan. The erosion and sedimentation control plan shall include all necessary measures to be taken to prevent excessive stormwater runoff or carrying by stormwater runoff of solid materials on to lands of adjacent property owners, public streets, or to creeks as a result of conditions created by grading operations. The plan shall include, but not be limited to, such measures as short-term erosion control planting, waterproof slope covering, check dams, interceptor ditches, benches, storm drains, dissipation structures, diversion dikes, retarding berms and barriers, devices to trap, store and filter out sediment, and stormwater retention basins. Off-site work by the project applicant may be necessary. The project applicant shall obtain permission or easements necessary for off-site work. There shall be a clear notation that the plan is subject to changes as changing conditions occur. Calculations of anticipated stormwater runoff and sediment volumes shall be included, if required by the Director of Development or designee. The plan shall specify that, after construction is complete, the project applicant shall ensure that the storm drain system shall be inspected and that the project applicant shall clear the system of any debris or sediment.	Prior to any grading activities	City of Oakland, CEDA, Building Services Division; Planning and Zoning Division	• Verify that an erosion and sedimentation control plan has been adequately prepared. • Verify that the applicant has obtained permissions and easements necessary for any off-site work required by the plan.		

Mitigation Monitoring and Reporting Program

Standard COA/MM	Mitigation Monitoring			Reporting	
	Monitoring Schedule	Monitoring Responsibility	Monitoring Procedure	Comments	Date/ Initials
Ongoing throughout grading and construction activities. b) The project applicant shall implement the approved erosion and sedimentation plan. No grading shall occur during the wet weather season (October 15 through April 15) unless specifically authorized in writing by the Building Services Division.	Ongoing throughout grading and construction activities.	City of Oakland, CEDA, Building Services Division; Planning and Zoning Division	• Verify that the plan has been implemented. • Conduct visits to the construction site to ensure that no grading is taking place during the wet weather season unless specifically authorized by the Building Services Division.		

Mitigation Monitoring and Reporting Program

Standard COA/MM	Mitigation Monitoring			Reporting	
	Monitoring Schedule	Monitoring Responsibility	Monitoring Procedure	Comments	Date/ Initials
COA HYDRO-2: Stormwater Pollution Prevention Plan (SWPPP). *Prior to and ongoing throughout demolition, grading, and/or construction activities.* The project applicant must obtain coverage under the General Construction Activity Storm Water Permit (General Construction Permit) issued by the State Water Resources Control Board (SWRCB). The project applicant must file a notice of intent (NOI) with the SWRCB. The project applicant will be required to prepare a stormwater pollution prevention plan (SWPPP). At a minimum, the SWPPP shall include a description of construction materials, practices, and equipment storage and maintenance; a list of pollutants likely to contact stormwater; site-specific erosion and sedimentation control practices; a list of provisions to eliminate or reduce discharge of materials to stormwater; Best Management Practices (BMPs), and an inspection and monitoring program. Prior to the issuance of any construction-related permits, the project applicant shall submit a copy of the SWPPP and evidence of approval of the SWPPP by the SWRCB to the Building Services Division. Implementation of the SWPPP shall start with the commencement of construction and continue though the completion of the project. After construction is completed, the project applicant shall submit a notice of termination to the SWRCB.	Submit SWPP to SWRCB prior to applying for first building permit; Submit copy of approved SWPP prior to issuance of first building permit; Comply with measures in SWPP: ongoing throughout demolition, grading, and/or construction activities	City of Oakland, CEDA, Building Services Division; Planning and Zoning Division	• Verify the preparation and approval of the SWPPP. • Conduct regular site visits to ensure compliance with the SWPPP throughout the completion of the project.		

Mitigation Monitoring and Reporting Program

Standard COA/MM	Mitigation Monitoring			Reporting	
	Monitoring Schedule	Monitoring Responsibility	Monitoring Procedure	Comments	Date/ Initials
COA HYDRO-3: Post-Construction Stormwater Pollution Management Plan. *Prior to issuance of building permit (or other construction-related permit).* The applicant shall comply with the requirements of Provision C.3 of the National Pollutant Discharge Elimination System (NPDES) permit issued to the Alameda Countywide Clean Water Program. The applicant shall submit with the application for a building permit (or other construction-related permit) a completed Stormwater Supplemental Form for the Building Services Division. The project drawings submitted for the building permit (or other construction-related permit) shall contain a stormwater pollution management plan, for review and approval by the City, to limit the discharge of pollutants in stormwater after construction of the project to the maximum extent practicable. a) The post-construction stormwater pollution management plan shall include and identify the following: • All proposed impervious surface on the site; • Anticipated directional flows of on-site stormwater runoff; and • Site design measures to reduce the amount of impervious surface area and directly connected impervious surfaces; and • Source control measures to limit the potential for stormwater pollution; and • Stormwater treatment measures to remove pollutants from stormwater runoff. b) The following additional information shall be submitted with the post-construction stormwater pollution management plan: • Detailed hydraulic sizing calculations for each stormwater treatment measure proposed; and	Submit plan prior to issuance of building permit (or other construction-related permit)	City of Oakland, CEDA, Building Services Division; Planning and Zoning Division	• Verify that the applicant complies with the requirements of Provision C.3 of the NPDES permit issued to the Alameda Countywide Clean Water Program. • Verify that a completed Stormwater Supplemental Form and a stormwater pollution management plan have been adequately prepared. • Prior to final permit inspection, verify that the stormwater pollution management plan is implemented.		

Mitigation Monitoring and Reporting Program

Standard COA/MM	Mitigation Monitoring			Reporting	
	Monitoring Schedule	Monitoring Responsibility	Monitoring Procedure	Comments	Date/ Initials
• Pollutant removal information demonstrating that any proposed manufactured/mechanical (i.e., non-landscape-based) stormwater treatment measure, when not used in combination with a landscape-based treatment measure, is capable or removing the range of pollutants typically removed by landscape-based treatment measures. All proposed stormwater treatment measures shall incorporate appropriate planting materials for stormwater treatment (for landscape-based treatment measures) and shall be designed with considerations for vector/mosquito control. Proposed planting materials for all proposed landscape-based stormwater treatment measures shall be included on the landscape and irrigation plan for the project. The applicant is not required to include on-site stormwater treatment measures in the post-construction stormwater pollution management plan if he or she secures approval from Planning and Zoning of a proposal that demonstrates compliance with the requirements of the City's Alternative Compliance Program. *Prior to final permit inspection.* The applicant shall implement the approved stormwater pollution management plan.					
COA HYDRO-4: Maintenance Agreement for Stormwater Treatment Measures. *Prior to final zoning inspection.* For projects incorporating stormwater treatment measures, the applicant shall enter into the "Standard City of Oakland Stormwater Treatment Measures Maintenance Agreement," in accordance with Provision C.3.e of the NPDES permit, which provides, in part, for the following: • The applicant accepting responsibility for the adequate installation/construction, operation, maintenance, inspection, and reporting of any on-site stormwater treatment measures	Prior to final zoning inspection for each phase of development	City of Oakland, CEDA, Building Services Division; Planning and Zoning Division	Verify that the applicant has entered into the the "Standard City of Oakland Stormwater Treatment Measures Maintenance Agreement," in accordance with Provision C.3.e of the NPDES permit.		

Mitigation Monitoring and Reporting Program

Standard COA/MM	Mitigation Monitoring			Reporting	
	Monitoring Schedule	Monitoring Responsibility	Monitoring Procedure	Comments	Date/ Initials
being incorporated into the project until the responsibility is legally transferred to another entity; and • Legal access to the on-site stormwater treatment measures for representatives of the City, the local vector control district, and staff of the Regional Water Quality Control Board, San Francisco Region, for the purpose of verifying the implementation, operation, and maintenance of the on-site stormwater treatment measures and to take corrective action if necessary. The agreement shall be recorded at the County Recorder's Office at the applicant's expense.					
G. GEOLOGY, SOILS AND SEISMICITY					
COA GEO-1 (same as COA HYDRO-1): Erosion and Sedimentation Control Plan. *Prior to any grading activities.* a) The project applicant shall obtain a grading permit if required by the Oakland Grading Regulations pursuant to Section 15.04.780 of the Oakland Municipal Code. The grading permit application shall include an erosion and sedimentation control plan. The erosion and sedimentation control plan shall include all necessary measures to be taken to prevent excessive stormwater runoff or carrying by stormwater runoff of solid materials on to lands of adjacent property owners, public streets, or to creeks as a result of conditions created by grading operations. The plan shall include, but not be limited to, such measures as short-term erosion control planting, waterproof slope covering, check dams, interceptor ditches, benches, storm drains, dissipation structures, diversion dikes, retarding berms and barriers, devices to trap, store and filter out sediment, and stormwater retention basins. Off-site work by the project applicant may be necessary. The project applicant shall obtain permission or easements necessary for	*See COA HYDRO-1*				

Mitigation Monitoring and Reporting Program

Standard COA/MM	Mitigation Monitoring			Reporting	
	Monitoring Schedule	Monitoring Responsibility	Monitoring Procedure	Comments	Date/ Initials
off-site work. There shall be a clear notation that the plan is subject to changes as changing conditions occur. Calculations of anticipated stormwater runoff and sediment volumes shall be included, if required by the Director of Development or designee. The plan shall specify that, after construction is complete, the project applicant shall ensure that the storm drain system shall be inspected and that the project applicant shall clear the system of any debris or sediment. *Ongoing throughout grading and construction activities.* b) The project applicant shall implement the approved erosion and sedimentation plan. No grading shall occur during the wet weather season (October 15 through April 15) unless specifically authorized in writing by the Building Services Division.	*See COA HYDRO-1*				
COA GEO-2: Soils Report. *Required as part of the submittal of a Tentative Tract or Tentative Parcel Map.* A preliminary soils report for each construction site within the project area shall be required as part if this project. The soils reports shall be based, at least in part, on information obtained from on-site testing. Specifically the minimum contents of the report should include: *A.* Logs of borings and/or profiles of test pits and trenches: a) The minimum number of borings acceptable, when not used in combination with test pits or trenches, shall be two (2), when in the opinion of the Soils Engineer such borings shall be sufficient to establish a soils profile suitable for the design of all the footings, foundations, and retaining structures. b) The depth of each boring shall be sufficient to provide adequate design criteria for all proposed structures. c) All boring logs shall be included in the soils report.	Required as part of the submittal of a Tentative Tract or Tentative Parcel Map(s)	City of Oakland, CEDA, Building Services Division	Verify that a preliminary soils report has been prepared for each construction site.		

Mitigation Monitoring and Reporting Program

Standard COA/MM	Mitigation Monitoring			Reporting	
	Monitoring Schedule	Monitoring Responsibility	Monitoring Procedure	Comments	Date/ Initials
B. Test pits and trenches: a) Test pits and trenches shall be of sufficient length and depth to establish a suitable soils profile for the design of all proposed structures. b) Soils profiles of all test pits and trenches shall be included in the soils report. *C.* A plat shall be included which shows the relationship of all the borings, test pits, and trenches to the exterior boundary of the site. The plat shall also show the location of all proposed site improvements. All proposed improvements shall be labeled. *D.* Copies of all data generated by the field and/or laboratory testing to determine allowable soil bearing pressures, sheer strength, active and passive pressures, maximum allowable slopes where applicable and any other information which may be required for the proper design of foundations, retaining walls, and other structures to be erected subsequent to or concurrent with work done under the grading permit. *E.* Soils Report. A written report shall be submitted which shall but is not limited to the following: a. Site description. b. Local and site geology. c. Review of previous field and laboratory investigations for the site. d. Review of information on or in the vicinity of the site on file at the Information Counter, City of Oakland, Office of Planning and Building.					

Mitigation Monitoring and Reporting Program

Standard COA/MM	Mitigation Monitoring			Reporting	
	Monitoring Schedule	Monitoring Responsibility	Monitoring Procedure	Comments	Date/ Initials
e. Site stability shall be addressed with particular attention to existing conditions and proposed corrective attention to existing conditions and proposed corrective actions at locations where land stability problems exist. f. Conclusions and recommendations for foundations and retaining structures, resistance to lateral loading, slopes, and specifications, for fills, and pavement design as required. g. Conclusions and recommendations for temporary and permanent erosion control and drainage. If not provided in a separate report they shall be appended to the required soils report. h. All other items which a Soils Engineer deems necessary. i. The signature and registration number of the Civil Engineer preparing the report. *F.* The Director of Planning and Building may reject a report that she/he believes is not sufficient. The Director of Planning and Building may refuse to accept a soils report if the certification date of the responsible soils engineer on said document is more than three years old. In this instance , the Director may be require that the old soils report be recertified, that an addendum to the soils report be submitted, or that a new soils report be provided.					

Mitigation Monitoring and Reporting Program

Standard COA/MM	Mitigation Monitoring			Reporting	
	Monitoring Schedule	Monitoring Responsibility	Monitoring Procedure	Comments	Date/ Initials
COA GEO-3: Geotechnical Report. *Required as part of the submittal of a tentative Tract Map or tentative Parcel Map.* a) A site-specific, design level, Landslide or Liquefaction geotechnical investigation for each construction site within the project area shall be required as part if this project. Specifically: Each investigation shall include an analysis of expected ground motions at the site from identified faults. The analyses shall be accordance with applicable City ordinances and polices, and consistent with the most recent version of the California Building Code, which requires structural design that can accommodate ground accelerations expected from identified faults. The investigations shall determine final design parameters for the walls, foundations, foundation slabs, surrounding related improvements, and infrastructure (utilities, roadways, parking lots, and sidewalks). The investigations shall be reviewed and approved by a registered geotechnical engineer. All recommendations by the project engineer, geotechnical engineer, will be included in the final design, as approved by the City of Oakland. The geotechnical report shall include a map prepared by a land surveyor or civil engineer that shows all field work and location of the "No Build" zone. The map shall include a statement that the locations and limitations of the geologic features are accurate representations of said features as they exist on the ground, were placed on this map by the surveyor, the civil engineer or under their supervision, and are accurate to the best of their knowledge.	Required as part of the submittal of a Tentative Tract or Tentative Parcel Map(s)	City of Oakland, CEDA, Building Services Division	Verify that a site-specific, design level, Landslide or Liquefaction geotechnical investigation for each construction site has been conducted and that the recommendations are included in the final project design.		

Mitigation Monitoring and Reporting Program

Standard COA/MM	Mitigation Monitoring			Reporting	
	Monitoring Schedule	Monitoring Responsibility	Monitoring Procedure	Comments	Date/ Initials
Recommendations that are applicable to foundation design, earthwork, and site preparation that were prepared prior to or during the projects design phase, shall be incorporated in the project. A peer review is required for the Geotechnical Report. Personnel reviewing the geologic report shall approve the report, reject it, or withhold approval pending the submission by the applicant or subdivider of further geologic and engineering studies to more adequately define active fault traces. Final seismic considerations for the site shall be submitted to and approved by the City of Oakland Building Services Division prior to commencement of the project. b) Tentative Tract or Parcel Map approvals shall require, but not be limited to approval of the Geotechnical Report.					
H. PUBLIC HEALTH AND HAZARDS					
COA HAZ-1: Hazards Best Management Practices. *Prior to issuance of a demolition, grading, or building permit.* The project applicant and construction contractor shall ensure that construction best management practices are implemented as part of construction to minimize the potential negative effects to groundwater and soils. These shall include the following: a) Follow manufacture's recommendations on use, storage, and disposal of chemical products used in construction; b) Avoid overtopping construction equipment fuel gas tanks; c) During routine maintenance of construction equipment, properly contain and remove grease and oils;	Ongoing through demolition, grading and construction activities	City of Oakland, CEDA, Building Services Division, and Planning and Zoning Division	Verify that construction BMPs are implemented.		

Mitigation Monitoring and Reporting Program

Standard COA/MM	Mitigation Monitoring			Reporting	
	Monitoring Schedule	Monitoring Responsibility	Monitoring Procedure	Comments	Date/ Initials
d) Properly dispose of discarded containers of fuels and other chemicals.					
e) Ensure that construction would not have a significant impact on the environment or pose a substantial health risk to construction workers and the occupants of the proposed development. Soil sampling and chemical analyses of samples shall be performed to determine the extent of potential contamination beneath all UST's, elevator shafts, clarifiers, and subsurface hydraulic lifts when on-site demolition, or construction activities would potentially affect a particular development or building.					
f) If soil, groundwater or other environmental medium with suspected contamination is encountered unexpectedly during construction activities (e.g., identified by odor or visual staining, or if any underground storage tanks, abandoned drums or other hazardous materials or wastes are encountered), the applicant shall cease work in the vicinity of the suspect material, the area shall be secured as necessary, and the applicant shall take all appropriate measures to protect human health and the environment. Appropriate measures shall include notification of regulatory agency(ies) and implementation of the actions described in Standard Conditions of Approval (see COA HAZ-3 and HAZ-5 below) as necessary, to identify the nature and extent of contamination. Work shall not resume in the area(s) affected until the measures have been implemented under the oversight of the City or regulatory agency, as appropriate.					

Mitigation Monitoring and Reporting Program

Standard COA/MM	Mitigation Monitoring			Reporting	
	Monitoring Schedule	Monitoring Responsibility	Monitoring Procedure	Comments	Date/ Initials
COA HAZ-2: Asbestos Removal in Structures. *Prior to issuance of a demolition permit.* If asbestos is found to be present in building materials to be removed, demolition and disposal is required to be conducted in accordance with procedures specified by Regulation 11, Rule 2 (Asbestos Demolition, Renovation and Manufacturing) of Bay Area Air Quality Management District (BAAQMD) regulations, as may be amended.	Make determin-ation prior to issuance of a demolition permit; Follow applicable procedures during removal activities	City of Oakland, CEDA, Building Services Division, and Planning and Zoning Division	Verify that any asbestos removal is conducted in accordance with procedures specified by Regulation 11, Rule 2 of BAAQMD regulations		
COA HAZ-3: Phase I and/or Phase II Reports. *Prior to issuance of a demolition, grading, or building permit.* Prior to issuance of demolition, grading, or building permits the project applicant shall submit to the Fire Prevention Bureau, Hazardous Materials Unit, a Phase I environmental site assessment report, and a Phase II report if warranted by the Phase I report for the project site. The reports shall make recommendations for remedial action, if appropriate, and should be signed by a Registered Environmental Assessor, Professional Geologist, or Professional Engineer.	Prior to issuance of a demolition, grading, or building permit	City of Oakland, CEDA, Building Services Division, and Planning and Zoning Division	Verify that a Phase I, and, if appropriate, Phase II, environmental site assessment report has been submitted to the Fire Prevention Bureau Hazardous Materials Unit. Ensure any approved recommended remediation actions are implemented.		

Mitigation Monitoring and Reporting Program

Standard COA/MM	Mitigation Monitoring			Reporting	
	Monitoring Schedule	Monitoring Responsibility	Monitoring Procedure	Comments	Date/ Initials
COA HAZ-4: Lead-Based Paint/Coatings, Asbestos, or PCB Occurrence Assessment. *Prior to issuance of a demolition, grading, or building permit.* The project applicant shall submit a comprehensive assessment report, signed by a qualified environmental professional, documenting the presence or lack thereof of asbestos-containing materials (ACM), lead-based paint, and any other building materials or stored materials classified as hazardous waste by State or federal law.	Prior to issuance of a demolition, grading, or building permit	City of Oakland, CEDA, Building Services Division, and Planning and Zoning Division	Verify that a comprehensive assessment report detailing materials classified as hazardous waste has been submitted.		
COA HAZ-5: Environmental Site Assessment Reports Remediation. *Prior to issuance of a demolition, grading, or building permit.* If the environmental site assessment reports recommend remedial action, the project applicant shall: a) Consult with the appropriate local, State, and federal environmental regulatory agencies to ensure sufficient minimization of risk to human health and environmental resources, both during and after construction, posed by soil contamination, groundwater contamination, or other surface hazards including, but not limited to, underground storage tanks, fuel distribution lines, waste pits and sumps. b) Obtain and submit written evidence of approval for any remedial action if required by a local, State, or federal environmental regulatory agency.	Prior to issuance of a demolition, grading, or building permit;	City of Oakland, CEDA, Building Services Division, and Planning and Zoning Division	• Verify that written evidence of approval for any remedial actions required has been obtained and that Remediation Action Plan has been adequately prepared. • Verify that a Construction-Phase Risk Management Plan has adequately been prepared.		

Mitigation Monitoring and Reporting Program

Standard COA/MM	Mitigation Monitoring			Reporting	
	Monitoring Schedule	Monitoring Responsibility	Monitoring Procedure	Comments	Date/ Initials
c) Submit a copy of all applicable documentation required by local, State, and federal environmental regulatory agencies, including but not limited to: permit applications, Phase I and II environmental site assessments, human health and ecological risk assessments, remedial action plans, risk management plans, soil management plans, and groundwater management plans. Prior to issuing any permits for construction at the project site, a Construction-Phase Risk Management Plan (RMP) shall be prepared for the project. The RMP shall include any health and safety measures determined necessary in the HHRA to protect the health of construction workers and nearby public during construction activities. These measures may potentially include dust control, air monitoring, and/or the use of personal protective equipment during construction activities. Action levels for contaminants of concern shall be established, with detailed descriptions of corrective actions to be taken in the event that the action levels are reached during monitoring. The RMP shall also include safety and emergency response measures included in the City's Standard Conditions HAZ-1 and HAZ-2. The RMP shall be reviewed and approved by the City of Oakland or designated regulatory oversight agency.					

Mitigation Monitoring and Reporting Program

Standard COA/MM	Mitigation Monitoring			Reporting	
	Monitoring Schedule	Monitoring Responsibility	Monitoring Procedure	Comments	Date/ Initials
d) Implementation of COA HAZ-5 would require a Remediation Action Plan (RAP). Required remedial actions shall include measures to ensure that any potential added health risks to future site users as a result of hazardous materials are reduced to a cumulative human health risk of less than 1 × 10-6 (one in one million) for carcinogens and a cumulative hazard index of 1.0 for non-carcinogens, or other site-specific goals established by regulatory oversight agencies. The potential risks to human health in excess of these goals may be reduced either by remediation of the contaminated soils or groundwater (e.g., excavation and off-site disposal of soils and treatment of groundwater) and/or implementation of institutional controls and engineering controls (IC/EC). IC/EC may include the use of hardscape (buildings and pavements), importation of clean soil in landscaped areas to eliminate exposure pathways, and deed restrictions. Specific remedies would depend on the findings of the site-specific HHRA and the requirements of the regulatory agencies					
COA HAZ-6: Lead-Based Paint Remediation. *Prior to issuance of a demolition, grading, or building permit.* If lead-based paint is present, the project applicant shall submit specifications signed by a certified Lead Supervisor, Project Monitor, or Project Designer for the stabilization and/or removal of the identified lead paint in accordance with all applicable laws and regulations, including but not necessarily limited to: Cal/OSHA's Construction Lead Standard, 8 CCR1532.1 and DHS regulation 17 CCR Sections 35001 through 36100, as may be amended.	Prior to issuance of a demolition, grading, or building permit	City of Oakland, CEDA, Building Services Division, and Planning and Zoning Division	Verify that specifications for the stabilization or removal of any lead paint have been submitted.		

Mitigation Monitoring and Reporting Program

Standard COA/MM	Mitigation Monitoring			Reporting	
	Monitoring Schedule	Monitoring Responsibility	Monitoring Procedure	Comments	Date/ Initials
COA HAZ-7: Asbestos Remediation. *Prior to issuance of a demolition, grading, or building permit.* If asbestos-containing materials (ACM) are present, the project applicant shall submit specifications signed by a certified asbestos consultant for the removal, encapsulation, or enclosure of the identified ACM in accordance with all applicable laws and regulations, including but not necessarily limited to: California Code of Regulations, Title 8; Business and Professions Code; Division 3; California Health & Safety Code 25915-25919.7; and Bay Area Air Quality Management District, Regulation 11, Rule 2, as may be amended.	Prior to issuance of a demolition, grading, or building permit	City of Oakland, CEDA, Building Services Division, and Planning and Zoning Division	Verify that specifications for the removal, encapsulation, or enclosure of any asbestos-containing materials have been submitted.		
COA HAZ-8: Other Materials Classified as Hazardous Waste. *Prior to issuance of a demolition, grading, or building permit.* If other building materials or stored materials classified as hazardous waste by State or federal law is present, the project applicant shall submit written confirmation that all State and federal laws and regulations shall be followed when profiling, handling, treating, transporting and/or disposing of such materials.	Prior to issuance of a demolition, grading, or building permit	City of Oakland, CEDA, Building Services Division, and Planning and Zoning Division	Verify that written confirmation has been obtained that all State and federal laws will be followed when profiling, handling, treating, transporting and/or disposing of all hazardous waste.		

Mitigation Monitoring and Reporting Program

Standard COA/MM	Mitigation Monitoring			Reporting	
	Monitoring Schedule	Monitoring Responsibility	Monitoring Procedure	Comments	Date/ Initials
COA HAZ-9: Health and Safety Plan per Assessment. *Prior to issuance of a demolition, grading, or building permit.* If the required lead-based paint/coatings, asbestos, or PCB assessment finds presence of such materials, the project applicant shall create and implement a health and safety plan to protect workers from risks associated with hazardous materials during demolition, renovation of affected structures, and transport and disposal.	Submit plan prior to issuance of a demolition, grading, or building permit; Implement measures in accordance with timeframes outlined in plan	City of Oakland, CEDA, Building Services Division, and Planning and Zoning Division	Verify that a health and safety plan to protect workers from hazardous waste has been adequately prepared.		
COA HAZ-10: Fire Safety Phasing Plan. *Prior to issuance of a demolition, grading, or building permit and concurrent with any p-job submittal permit.* The project applicant shall submit a separate fire safety phasing plan to the Planning and Zoning Division and Fire Services Division for their review and approval. The fire safety plan shall include all of the fire safety features incorporated into the project and the schedule for implementation of the features. Fire Services Division may require changes to the plan or may reject the plan if it does not adequately address fire hazards associated with the project as a whole or the individual phase.	Submit plan prior to issuance of a demolition, grading, or building permit and concurrent with any p-job submittal permit	City of Oakland, CEDA, Building Services Division, and Planning and Zoning Division and Fire Services Division	Verify that a fire safety phasing plan has been prepared.		

Mitigation Monitoring and Reporting Program

Standard COA/MM	Mitigation Monitoring			Reporting	
	Monitoring Schedule	**Monitoring Responsibility**	**Monitoring Procedure**	**Comments**	**Date/ Initials**
COA HAZ-11: Fire Safety. *Prior to and ongoing throughout demolition, grading, and/or construction.* The project applicant and construction contractor will ensure that during project construction, all construction vehicles and equipment will be fitted with spark arrestors to minimize accidental ignition of dry construction debris and surrounding dry vegetation.	Prior to and ongoing throughout demolition, grading, and/or construction	City of Oakland, CEDA, Building Services Division, and Planning and Zoning Division and Fire Services Division	Conduct periodic site visits to ensure that all construction vehicles and equipment are fitted with spark arrestors.		
COA HAZ-12: Hazardous Materials Business Plan. *Prior to issuance of a business license.* The project applicant shall submit a Hazardous Materials Business Plan for review and approval by Fire Prevention Bureau, Hazardous Materials Unit. Once approved this plan shall be kept on file with the City and will be updated as applicable. The purpose of the Hazardous Materials Business Plan is to ensure that employees are adequately trained to handle the materials and provides information to the Fire Services Division should emergency response be required. The Hazardous Materials Business Plan shall include the following: 1. The types of hazardous materials or chemicals stored and/or used on site, such as petroleum fuel products, lubricants, solvents, and cleaning fluids. 2. The location of such hazardous materials. 3. An emergency response plan including employee training information 4. A plan that describes the manner in which these materials are handled, transported and disposed.	Prior to issuance of a business license for businesses handling hazardous materials	City of Oakland, CEDA, Building Services Division, and Planning and Zoning Division and Fire Services Division	Verify that a hazardous materials business plan has been prepared.		

Mitigation Monitoring and Reporting Program

Standard COA/MM	Mitigation Monitoring			Reporting	
	Monitoring Schedule	Monitoring Responsibility	Monitoring Procedure	Comments	Date/ Initials
I. PUBLIC SERVICES					
COA SERV-1: Conformance with other Requirements. *Prior to issuance of a demolition, grading, P-job, or other construction related permit.* a) The project applicant shall comply with all other applicable federal, state, regional and/or local codes, requirements, regulations, and guidelines, including but not limited to those imposed by the City's Building Services Division, the City's Fire Marshal, and the City's Public Works Agency. Compliance with other applicable requirements may require changes to the approved use and/or plans. These changes shall be processed in accordance with the procedures contained in Condition of Approval 3. b) The applicant shall submit approved building plans for project-specific needs related to fire protection to the Fire Services Division for review and approval, including, but not limited to automatic extinguishing systems, water supply improvements and hydrants, fire department access, and vegetation management for preventing fires and soil erosion.	Prior to issuance of a demolition, grading, P-job, or other construction related permit.	City of Oakland, CEDA, Building Services Division, and Planning and Zoning Division and Fire Services Division	Ensure that the project applicant complies with all applicable laws and regulations as detailed in COA SERV-1.		
COA SERV-2: Fire Safety Phasing Plan. *Prior to issuance of a demolition, grading, and/or construction and concurrent with any p-job submittal permit,* the project applicant shall submit a separate fire safety phasing plan to the Planning and Zoning Division and Fire Services Division for their review and approval. The fire safety plan shall include all of the fire safety features incorporated into the project and the schedule for implementation of the features. Fire Services Division may require changes to the plan or may reject the plan if it does not adequately address fire hazards associated with the project as a whole or the individual phase.	*See COA HAZ-10*				

Mitigation Monitoring and Reporting Program

Standard COA/MM	Mitigation Monitoring			Reporting	
	Monitoring Schedule	**Monitoring Responsibility**	**Monitoring Procedure**	**Comments**	**Date/ Initials**
COA SERV-3: Site Review by the Fire Services Division. *Prior to the issuance of demolition, grading or building permit.* The project applicant shall submit plans for site review and approval to the Fire Prevention Bureau Hazardous Materials Unit. Property owner may be required to obtain or perform a Phase II hazard assessment.	Prior to issuance of a demolition, grading, or building permit	City of Oakland, CEDA, Building Services Division, and Planning and Zoning Division and Fire Prevention Bureau Hazardous Materials Unit	Verify that plan has been submitted for review and approval.		
J. UTILITIES AND INFRASTRUCTURE					
COA UTIL-1: Waste Reduction and Recycling. *Prior to issuance of demolition, grading, or building permit.* The project applicant will submit a Construction & Demolition Waste Reduction and Recycling Plan (WRRP) and an Operational Diversion Plan (ODP) for review and approval by the Public Works Agency. Chapter 15.34 of the Oakland Municipal Code outlines requirements for reducing waste and optimizing construction and demolition (C&D) recycling. Affected projects include all new construction, renovations/ alterations/modifications with construction values of $50,000 or more (except R-3), and all demolition (including soft demo).The WRRP must specify the methods by which the development will divert C&D debris waste generated by the proposed project from landfill disposal in accordance with current City requirements. Current standards, FAQs, and forms are available at www.oaklandpw.com/Page39.aspx_or in the Green Building Resource Center. After approval of the plan, the project applicant shall implement the plan.	Submit plan prior to issuance of demolition, grading, or building permit; Implement plan according to timeframes outlined in plan	City of Oakland, CEDA, Building Services Division	Verify that a Construction & Demolition Waste Reduction and Recycling Plan and an Operational Diversion Plan have been submitted.		

Mitigation Monitoring and Reporting Program

Standard COA/MM	Mitigation Monitoring			Reporting	
	Monitoring Schedule	Monitoring Responsibility	Monitoring Procedure	Comments	Date/ Initials
Ongoing. The ODP will identify how the project complies with the Recycling Space Allocation Ordinance, (Chapter 17.118 of the Oakland Municipal Code), including capacity calculations, and specify the methods by which the development will meet the current diversion of solid waste generated by operation of the proposed project from landfill disposal in accordance with current City requirements. The proposed program shall be in implemented and maintained for the duration of the proposed activity or facility. Changes to the plan may be re-submitted to the Environmental Services Division of the Public Works Agency for review and approval. Any incentive programs shall remain fully operational as long as residents and businesses exist at the project site.	Ongoing	City of Oakland, CEDA, Building Services Division	Verify that the proposed program is implemented and maintained for the duration of the proposed activity or facility.		

Mitigation Monitoring and Reporting Program

Standard COA/MM	Mitigation Monitoring			Reporting	
	Monitoring Schedule	Monitoring Responsibility	Monitoring Procedure	Comments	Date/ Initials
COA UTIL-2: Storm Water and Sewer. *Prior to completing the final design for the project's sewer service.* Confirmation of the capacity of the City's surrounding stormwater and sanitary sewer system and state of repair shall be completed by a qualified civil engineer with funding from the project applicant. The project applicant shall be responsible for the necessary stormwater and sanitary sewer infrastructure improvements to accommodate the proposed project. In addition, the applicant shall be required to pay additional fees to improve sanitary sewer infrastructure if required by the City. Improvements to the existing sanitary sewer collection system shall specifically include, but are not limited to, mechanisms to control or minimize increases in infiltration/inflow to offset sanitary sewer increases associated with the proposed project. To the maximum extent practicable, the applicant will be required to implement Best Management Practices to reduce the peak stormwater runoff from the project site. Additionally, the project applicant shall be responsible for payment of the required installation or hook-up fees to the affected service providers.	Prior to completing the final design for the project's sewer service	City of Oakland, CEDA, Building Services Division	• Confirm that any necessary stormwater and sanitary sewer infrastructure improvements required by the project are implemented. • Verify that the project applicant pays additional fees for any City improvements to the sanitary sewer system, as well as any fees to the affected service providers. • Ensure that BMPs to reduce stormwater runoff are implemented.		

Mitigation Monitoring and Reporting Program

Standard COA/MM	Mitigation Monitoring			Reporting	
	Monitoring Schedule	Monitoring Responsibility	Monitoring Procedure	Comments	Date/ Initials
COA UTIL-3: Site Design Measures for Post-Construction Stormwater Pollution Management *Prior to issuance of building permit (or other construction-related permit)* The project drawings submitted for a building permit (or other construction-related permit) shall contain a final site plan to be reviewed and approved by Planning and Zoning. The final site plan shall incorporate appropriate site design measures to manage stormwater runoff and minimize impacts to water quality after the construction of the project. These measures may include, but are not limited to, the following: i. Minimize impervious surfaces, especially directly connected impervious surfaces; ii. Utilize permeable paving in place of impervious paving where appropriate; iii. Cluster buildings; iv. Preserve quality open space; and v. Establish vegetated buffer areas. *Ongoing* The approved plan shall be implemented and the site design measures shown on the plan shall be permanently maintained.	Prior to issuance of building permit (or other construction-related permit); and ongoing	City of Oakland, CEDA, Building Services Division; Planning and Zoning Division; Public Works Agency, Environmental Services Division	Confirm that any necessary stormwater and sanitary sewer infrastructure improvements required by the project are implemented.		

Mitigation Monitoring and Reporting Program

Standard COA/MM	Mitigation Monitoring			Reporting	
	Monitoring Schedule	Monitoring Responsibility	Monitoring Procedure	Comments	Date/ Initials
COA UTIL-4: Source Control Measures to Limit Stormwater Pollution. *Prior to issuance of building permit (or other construction-related permit)* The applicant shall implement and maintain all structural source control measures imposed by the Chief of Building Services to limit the generation, discharge, and runoff of stormwater pollution. *Ongoing* The applicant, or his or her successor, shall implement all operational Best Management Practices (BMPs) imposed by the Chief of Building Services to limit the generation, discharge, and runoff of stormwater pollution.	Prior to issuance of building permit (or other construction-related permit); and ongoing	City of Oakland, CEDA, Building Services Division; Planning and Zoning Division; Public Works Agency, Environmental Services Division	• Confirm that any necessary structural source control measures improvements are implemented. •		

Mitigation Monitoring and Reporting Program

Standard COA/MM	Mitigation Monitoring			Reporting	
	Monitoring Schedule	Monitoring Responsibility	Monitoring Procedure	Comments	Date/ Initials
COA UTIL-5: Storm Water and Sewer. *Prior to completing the final design for the project's sewer service.* Confirmation of the capacity of the City's surrounding stormwater and sanitary sewer system and state of repair shall be completed.	Prior to completing the final design for the project's sewer service	City of Oakland, CEDA, Building Services Division	• Confirm that any necessary stormwater and sanitary sewer infrastructure improvements required by the project. •		
K. CULTURAL AND PALEONTOLOGICAL RESOURCES					
COA CULT-1: Archaeological Resources. *Ongoing throughout demolition, grading, and/or construction* Pursuant to CEQA Guidelines section 15064.5 (f), "provisions for historical or unique archaeological resources accidentally discovered during construction" should be instituted. Therefore, in the event that any prehistoric or historic subsurface cultural resources are discovered during ground disturbing activities, all work within 50 feet of the resources shall be halted and the project applicant and/or lead agency shall consult with a qualified archaeologist or paleontologist to assess the significance of the find. If any find is determined to be significant, representatives of the project proponent and/or lead agency and the qualified archaeologist would meet to determine the appropriate avoidance measures or other appropriate measure, with the ultimate determination to be made by the City of Oakland. All significant cultural materials recovered shall be subject to scientific analysis, professional museum curation, and a report prepared by the qualified archaeologist according to current professional standards.	Ongoing throughout demolition, grading, and/or construction	City of Oakland, CEDA, Building Services Division and Planning and Zoning Division – Historic Preservation Staff	Ensure that all work within 50 feet of the site where any prehistoric or historic subsurface cultural resources are discovered is halted.		

Mitigation Monitoring and Reporting Program

Standard COA/MM	Mitigation Monitoring			Reporting	
	Monitoring Schedule	Monitoring Responsibility	Monitoring Procedure	Comments	Date/ Initials
In considering any suggested measure proposed by the consulting archaeologist in order to mitigate impacts to historical resources or unique archaeological resources, the project applicant shall determine whether avoidance is necessary and feasible in light of factors such as the nature of the find, project design, costs, and other considerations. If avoidance is unnecessary or infeasible, other appropriate measures (e.g., data recovery) shall be instituted. Work may proceed on other parts of the project site while measure for historical resources or unique archaeological resources is carried out. Should an archaeological artifact or feature be discovered on-site during project construction, all activities within a 50-foot radius of the find would be halted until the findings can be fully investigated by a qualified archaeologist to evaluate the find and assess the significance of the find according to the CEQA definition of a historical or unique archaeological resource. If the deposit is determined to be significant, the project applicant and the qualified archaeologist shall meet to determine the appropriate avoidance measures or other appropriate measure, subject to approval by the City of Oakland, which shall assure implementation of appropriate measure measures recommended by the archaeologist. Should archaeologically-significant materials be recovered, the qualified archaeologist shall recommend appropriate analysis and treatment, and would prepare a report on the findings for submittal to the Northwest Information Center.					

Mitigation Monitoring and Reporting Program

Standard COA/MM	Mitigation Monitoring			Reporting	
	Monitoring Schedule	Monitoring Responsibility	Monitoring Procedure	Comments	Date/ Initials
COA CULT-2: Human Remains. *Ongoing throughout demolition, grading, and/or construction* In the event that human skeletal remains are uncovered at the project site during construction or ground-breaking activities, all work shall immediately halt and the Alameda County Coroner shall be contacted to evaluate the remains, and following the procedures and protocols pursuant to Section 15064.5 (e)(1) of the CEQA Guidelines. If the County Coroner determines that the remains are Native American, the City shall contact the California Native American Heritage Commission (NAHC), pursuant to subdivision (c) of Section 7050.5 of the Health and Safety Code, and all excavation and site preparation activities shall cease within a 50-foot radius of the find until appropriate arrangements are made. If the agencies determine that avoidance is not feasible, then an alternative plan shall be prepared with specific steps and timeframe required to resume construction activities. Monitoring, data recovery, determination of significance and avoidance measures (if applicable) shall be completed expeditiously.	Ongoing throughout demolition, grading, and/or construction	City of Oakland, CEDA, Building Services Division and Planning and Zoning Division	Ensure that all work is halted if any human skeletal remains are uncovered at the project site and that the Alameda County Coroner is contacted.		

Mitigation Monitoring and Reporting Program

Standard COA/MM	Mitigation Monitoring			Reporting	
	Monitoring Schedule	Monitoring Responsibility	Monitoring Procedure	Comments	Date/ Initials
COA CULT-3: Paleontological Resources. *Ongoing throughout demolition, grading, and/or construction* In the event of an unanticipated discovery of a paleontological resource during construction, excavations within 50 feet of the find shall be temporarily halted or diverted until the discovery is examined by a qualified paleontologist (per Society of Vertebrate Paleontology standards (SVP 1995,1996)). The qualified paleontologist shall document the discovery as needed, evaluate the potential resource, and assess the significance of the find. The paleontologist shall notify the appropriate agencies to determine procedures that would be followed before construction is allowed to resume at the location of the find. If the City determines that avoidance is not feasible, the paleontologist shall prepare an excavation plan for mitigating the effect of the project on the qualities that make the resource important, and such plan shall be implemented. The plan shall be submitted to the City for review and approval.	Ongoing throughout demolition, grading, and/or construction	City of Oakland, CEDA, Building Services Division and Planning and Zoning Division	Ensure that excavations within 50 feet of any paleontological resource discovery are halted and that a qualified paleontologist is notified.		
L. AESTHETIC RESOURCES					
COA AES-1: Lighting Plan. *Prior to the issuance of an electrical or building permit* The proposed lighting fixtures shall be adequately shielded to a point below the light bulb and reflector and that prevent unnecessary glare onto adjacent properties. All lighting shall be architecturally integrated into the site.	Prior to the issuance of an electrical or building permit	City of Oakland Community and Economic Development Agency	Ensure that proposed lighting fixtures are adequately shielded to prevent unnecessary glare onto adjacent properties.		

EXHIBIT N

OPA SECTIONS 8.7, 8.8, 8.3, 11.1.2, 1.1.16

Contractor must meet the provisions of the Owner Participating Agreement Sections 8.7, 8.8, 8.3, 11.1.2, and 1.1.16 per the attached document dated September 13th, 2010.

- Owner Participating Agreement Sections 8.7, 8.8, 8.3, 11.1.2 and 1.1.16, 3 pages.

MacArthur Transit Village Development
Owner Participation Agreement:

Sections 8.7, 8.8, 8.3, 11.1.2, 1.1.16
Dated 9/13/2010

The following sections from the Owner Participation Agreement shall be considered by the Contractor:

8.7

Employment Nondiscrimination. The Developer, its successors, assigns, contractors and subcontractors shall not discriminate against any employee or applicant for employment in the connection with the Project on the basis of race, color, ancestry, national origin, religion, sex, sexual preference, marital status, AIDS or AIDS-related complex, or physical or mental disability. Each of the following activities shall be conducted in a nondiscriminatory manner: hiring; upgrading; demotion and transfers; recruitment and recruitment advertising; layoff and termination; rates of pay and other forms of compensation; and selection for training, including apprenticeships. The developer and its contractors, employees, and agents shall comply with all applicable federal and state laws, including equal opportunity and fair employment laws and regulations applicable to the Site and Project due to the Agency financing certain aspects of the Project. Developer acknowledges that the City may impose additional nondiscrimination, local hiring, or construction labor requirements on the Project in connection with the Land use Approvals, and that nothing in this Agreement shall be construed to relieve or exempt Developer from such City-imposed requirements.

8.8

Sales and Use Tax Allocations. The Developer shall require that its contractors and subcontractors exercise their option to obtain a Board of Equalization sub-permit for the Site and allocate all eligible use tax payments to the City. Prior to beginning the construction of each Phase of the Project, the Developer shall require that its contractor and subcontractors for such Phase provide the City with either a copy of the sub-permit or a statement that use tax does not apply to their portion of the job.

The Developer shall review the direct payment process established under California Revenue and Taxation Code 7051.3 and, if eligible, use the permit so that the local share of its use tax payments is allocated to the City. The Developer shall provide the City with either a copy of the direct payment permit or a statement certifying ineligibility to quality for the permit. The Developer shall further work with the Agency to inform all commercial tenants and operators of facilities in the Project about the direct payment permit process and require their participation if qualified.

8.3

Prevailing Wages. All workers performing construction work for the Project employed by Developer and by any of its contractors and subcontractors shall be compensated in an amount no less than the general prevailing rate of per diem wages as determined by the California Department of Industrial Relations under California Labor Code sections 1770, et seq. The Developer shall comply with, and shall ensure that its contractors and subcontractors comply with, all reporting and recordkeeping requirements of the applicable prevailing wage statutes and regulations. The Developer is aware of and shall comply with all provisions of the Agency's prevailing wage requirements contained in Resolution no. 87-4 C.M.S., passed on January 20, 1987. Developer shall indemnify, hold harmless and defend (with counsel reasonably acceptable to the Agency) the Agency and the City against any claim for damages, compensation fines, penalties or other amounts arising out of the failure or alleged failure of any person or entity (including Developer, its contractor and subcontractors) to pay prevailing wages as determined pursuant to Labor Code Sections 1720 et seq. and implementing regulations in connection with construction of the Project or any other work of construction undertaken by or on behalf of Developer in connection with the Project.

11.1.2

Hazardous Materials Laws. Developer hereby represents and warrants to the Agency that, at all times from and after Developer's acquisition of any portion of the Site, Developer shall comply and cause such property and any improvements thereon to comply with Hazardous Materials Laws, including without limitation, those relating to soil and groundwater conditions.

1.1.16

Hazardous Materials Laws. "Hazardous Materials Laws" means all federal, state, and local laws, ordinances, regulations, orders and directives pertaining to hazardous materials. Without limiting the foregoing, hazardous materials laws include each of the following: Federal Resource Conservation and Recovery Act of 1979, 42 U.S.C. Section 6901, et seq.; federal comprehensive environmental response, compensation, and liability act of 1980, 49 U.S.C. Section 1801, et seq.; Federal Clean Air Act, 42 U.S.C. Sections 7401 7626; Federal Water Pollution Control Act, Federal Clean Water Act of 1977, 33 U.S.C. Section 1251, et seq.; Federal Insecticide, Fungicide, and Rodenticide Act, Federal Pesticide Act of 1978, 7 U.S.C. Paragraph 13, et seq.; Federal Toxic Substances Control Act, 15 U.S.C. Section 2601, et seq.; Federal Safe Drinking Water Act, 42 U.S.C. Section 300(f) , et seq.; California Health & Safety Code Section 25100, et seq.; Hazardous Substance Account Act, California Health & Safety Code Section 25300, et seq.; Hazardous Substance Cleanup Bond Act, California Health & Safety Code Section 25385, et seq.; Water Quality Control Act, California Health & Safety Code

Section 13050, et seq.; California Environmental Quality Act, California Public Resources Code Section 21000, et seq.; California Radiation Control Law, California Health and Safety Code Section 25801, et seq.; Solid Waste Management and Resource Recovery Act, Government Code Section 66700, et seq.; Hazardous Waste Management Act of 1986, Health and Safety Code Section 25179.1, et seq.; Safe Drinking Water and Toxic Enforcement Act of 1986, Health and Safety Code Section 25249.5, et seq.

EXHIBIT O

BART DESIGN AND CONSTRCTION AGREEMENT

Contractor must meet the provisions of the BART Design and Construction Agreement per the attached document dated October 6th, 2010.

- BART Design and Construction Agreement, 85 pages.

DESIGN AND CONSTRUCTION AGREEMENT

between

SAN FRANCISCO BAY AREA RAPID TRANSIT DISTRICT

and

MACARTHUR TRANSIT COMMUNITY PARTNERS, LLC

October 6, 2011

Oakland, California

TABLE OF CONTENTS

Page

SECTION I. DEFINITIONS AND EXHIBITS 2

1.01 Definitions. 2

1.02 Exhibits to Agreement. 8

SECTION II. DESIGN AND CONSTRUCTION OF BART GARAGE 9

2.01 Overview of Design of BART Garage. 9

2.02 Previous Plan Approvals; Approval of Final Plans. 9

2.03 BART Garage Coordination. 10

2.04 BART Garage Budget. 10

2.05 Construction Contract. 10

2.06 Construction Bonds. 11

2.07 Completion Guarantee. 11

2.08 Permits and Approvals. 11

2.09 Insurance. 11

2.10 Notice to Proceed, Satisfaction of Conditions. 11

2.11 Access to Site. 11

2.12 Commencement of Construction, Completion. 12

2.13 Developer's Obligations for Construction. 12

2.14 Execution of Contracts, Subcontracts and Purchase Orders. 15

2.15 Payment for Construction Costs. 15

2.16 Procedure for Making Change Orders. 16

2.17 Inspections and Warranties. 18

2.18 Completion. 20

2.19 Condition of BART Garage Parcel. 23

2.20 As Built Drawings, Record Drawings, and Operations and Maintenance Manuals. 24

TABLE OF CONTENTS
(continued)

Page

2.21 Party Representatives. 25

2.22 Payment of BART Costs. 25

2.23 Standards for BART Garage Construction. 26

SECTION III. DESIGN AND CONSTRUCTION OF PLAZA IMPROVEMENTS 27

3.01 Overview of Obligations. 27

3.02 Completion of Plans and Specifications, Approvals and Permits. 27

3.03 Review and Approval of Plaza Improvement Plans. 27

3.04 Budget for Plaza Improvements. 28

3.05 Construction Bonds. 28

3.06 Construction Guarantee. 29

3.07 Construction Contract. 29

3.08 Insurance. 29

3.09 Commencement of Construction, Satisfaction of Conditions. 29

3.10 Access to Plaza. 29

3.11 Commencement and Completion of the Plaza Improvements. 30

3.12 Developer's Obligations for Construction. 30

3.13 Execution of Contracts, Subcontracts and Purchase Orders 33

3.14 Payment for Construction Costs of Plaza Improvements. 33

3.15 Payment Procedure 33

3.16 Procedure for Making Plaza Improvement Change Orders 33

3.17 Inspections and Warranties. 37

3.18 Plaza Improvements Completion 38

3.19 Condition of Plaza. 39

TABLE OF CONTENTS
(continued)

Page

3.20 As Built Drawings, Record Drawings, and Operations and Maintenance Manuals 39

3.21 Payment of BART Costs. 40

3.22 Standards for Plaza Improvements Construction. 41

SECTION IV. DESIGN AND CONSTRUCTION OF TRANSPORTATION IMPROVEMENTS 42

4.01 Overview of Obligations. 42

4.02 Completion of Plans and Specifications, Approvals and Permits. 42

4.03 Review and Approval of Transportation Improvement Plans. 42

4.04 Budget for Transportation Improvements. 43

4.05 Construction Bonds. 43

4.06 Construction Guarantee. 43

4.07 Construction Contract. 43

4.08 Insurance. 44

4.09 Commencement of Construction, Satisfaction of Conditions. 44

4.10 Access. 44

4.11 Commencement and Completion of the Transportation Improvements. 44

4.12 Developer's Obligations for Construction. 44

4.13 Execution of Contracts, Subcontracts and Purchase Orders 47

4.14 Payment for Construction Costs of Transportation Improvements 48

4.15 Procedure for Making TI Change Orders. 48

4.16 Inspections and Warranties. 51

4.17 Transportation Improvements Completion 52

4.18 Condition of Frontage Road Property. 53

TABLE OF CONTENTS
(continued)

Page

4.19 As Built Drawings, Record Drawings, and Operations and Maintenance Manuals 54

4.20 Payment of BART Costs. 54

4.21 Standards for Transportation Improvements Construction. 55

SECTION V. PROVISIONS APPLICABLE TO ALL CONSTRUCTION 56

5.01 Prevailing Wages. 56

5.02 Insurance 57

5.03 Fair Employment Opportunity 61

5.04 Liens and Claims. 61

5.05 Compliance with Laws. 62

5.06 No Impairment of Operation of Transit Facilities. 62

5.07 Conditions Endangering Transit Facilities. 63

5.08 Reallocation of Contingency Funds. 63

SECTION VI. GENERAL PROVISIONS 64

6.01 Indemnity. 64

6.02 Defaults by Developer 64

6.03 BART Default 65

6.04 Alternative Dispute Resolution. 65

6.05 Assignment. 67

6.06 Mutual Cooperation. 67

6.07 Unavoidable Delays; Force Majeure. 68

6.08 Delivery of Plans. 68

6.09 Further Assurances. 69

6.10 No Recourse. 69

TABLE OF CONTENTS
(continued)

		Page
6.11	Waiver.	69
6.12	Notices.	69
6.13	Independent Developer.	71
6.14	Governing Law.	71
6.15	Captions.	71
6.16	Severability.	71
6.17	Third Party Rights.	71
6.18	Modification.	71
6.19	Entire Agreement.	71
6.20	Counterparts.	72
6.21	Time of the Essence.	72
6.22	Attorneys Fees.	72
6.23	Binding Effect.	72
6.24	Calendar Days.	72

DESIGN AND CONSTRUCTION AGREEMENT

This Design and Construction Agreement, entered into on October 6, 2011, is by and between the MacARTHUR TRANSIT COMMUNITY PARTNERS, LLC, a California limited liability company ("Developer"), and the SAN FRANCISCO BAY AREA RAPID TRANSIT DISTRICT, a rapid transit district established pursuant to Public Utilities Code section 28500 et seq. ("BART").

RECITALS

A. Capitalized terms used in these recitals have the meaning set forth in Section 1.01 below.

B. BART is the owner of that certain real property in the City of Oakland ("City"), County of Alameda ("County"), State of California, consisting of approximately 0.721 acres (the "BART Garage Parcel"), as more particularly described on Exhibit A attached hereto. BART also owns certain additional property adjacent to the BART Garage Parcel (the "Other BART Property"), which is more particularly described on Exhibit B attached hereto and includes a pedestrian plaza (the "Plaza") that provides a gateway to the Station (defined below). The Other BART Property constitutes a portion of the real property totaling approximately 7.76 acres (the "Project Site") that is to be used to develop the Project (defined below), which Project Site is depicted on the diagram attached hereto as Exhibit C.

C. BART and the Oakland Redevelopment Agency ("Agency") desire to have the Project Site developed as the MacArthur Transit Village, a mixed-use, transit-oriented project, including affordable and market-rate housing, retail/commercial and community space and replacement parking (the "Project") adjacent to the MacArthur BART Station (the "Station"). Agency and BART have selected Developer as the master developer of the Project.

D. In connection therewith, BART and Developer entered into that certain Purchase and Lease Option Agreement dated as of July 29, 2010 (the "Option Agreement"), pursuant to which BART agreed to sell and to lease certain portions of the Other BART Property to Developer, in accordance with and pursuant to the terms of the Option Agreement.

E. Pursuant to the terms of the Option Agreement, Developer has agreed to construct a replacement parking garage structure including four hundred fifty (450) parking spaces for BART patrons, not less than eighteen (18) first floor parking spaces for retail and other Project uses, approximately five thousand two hundred (5,200) square feet of retail shell space (no tenant improvements), and communication connection to the BART Station (the "BART Garage") on the BART Garage Parcel, as well as the Plaza Improvements, the roadway between 40th Street and MacArthur Boulevard (the "BART Roadway") and a shuttle stopping area (the "Shuttle Stop") on the Other BART Property.

F. Agency will provide funding for the construction of the BART Garage from Proposition 1C grant funds received by Agency from the State of California (the "Prop 1C Funds") pursuant to a funding agreement with the State Department of Housing and Community

Development (the "HCD Funding Agreement") and certain Agency funds. BART will provide funding for the construction of the Plaza Improvements from grant funds received by BART from the Federal Transit Administration (the "Grant Funds") pursuant to a pass-through funding agreement with Developer (the "Pass-Through Agreement"). Additional funding for certain costs associated with the Plaza Improvements will be provided by the Prop 1C Funds. Developer shall pay for the cost of constructing the BART Roadway and the Shuttle Stop (collectively, the "Transportation Improvements") from Prop 1C Funds and Agency funds committed to the Project (the "TI Funds").

G. The Developer and BART desire to provide for construction of the BART Garage, the Plaza Improvements and the Transportation Improvements.

H. The Parties have created the Garage Contingency Fund, the PI Contingency Fund and the TI Contingency Fund to fund costs related to BART originated Garage Change Orders, Plaza Improvement Change Orders and TI Change Orders, respectively, and other unanticipated costs that may be required to be paid by BART pursuant to this Agreement. It is the intent of the Parties that the funds allocated to the Garage Contingency Fund, the PI Contingency Fund and the TI Contingency Fund fully fund any costs required to be paid by BART under this Agreement and that BART will not be obligated to incur any unreimbursed out-of-pocket costs with respect to the Phase I Improvements or otherwise under this Agreement, except as provided in Section 6.01(b) or otherwise expressly provided in this Agreement. In the event that the Garage Contingency Fund, the PI Contingency Fund and the TI Contingency Fund are insufficient to pay BART-related costs, the parties have agreed to work in good faith to identify additional sources of funds to assist BART in paying any BART-related costs.

SECTION I.
DEFINITIONS AND EXHIBITS

1.01 Definitions.

The following capitalized terms shall, for the purposes of this Agreement, have the meaning set forth in this Section 1.01:

(a) "Access Strategies Program" has the meaning given such term in the Option Agreement.

(b) "Adjusted Contract Value" is defined as part of the definition of "Retainage Percentage" below.

(c) "Agency" is defined in Recital C.

(d) "Agreement" means this Design and Construction Agreement.

(e) "Approved BFS Variances" means variances from the BFS approved in writing by BART in advance.

(f) "BART" means the San Francisco Bay Area Rapid Transit District, a rapid transit district established under Public Utilities Code Sections 28500 et seq.

(g) "BART Construction Procedure Manual" is defined in Section 2.13(b) below.

(h) "BART Cost Budget" is defined in Section 2.22 below.

(i) "BART Costs" means the categories of cost set forth in the BART Cost Budget, the BART PI Cost Budget and the BART TI Cost Budget.

(j) "BART Facility Standards" and "BFS" mean BART's Facility Standards, R2.1, dated October 2009.

(k) "BART Garage " is defined in Recital E.

(l) "BART Garage Coordination Plan" means the plan to be approved pursuant to Section 2.03 below. The BART Garage Coordination Plan provides for coordination of various matters in conjunction with construction of the BART Garage.

(m) "BART Garage Parcel" is defined in Recital B.

(n) "BART PI Cost Budget" is defined in Section 3.21 below.

(o) "BART Representative" is defined in Section 2.21 below.

(p) "BART Roadway" is defined in Recital E.

(q) "BART TI Cost Budget" is defined in Section 4.20 below.

(r) "Basis of Design" means the preliminary architectural and engineering plans and specifications for construction of the BART Garage that were prepared by Developer and its consultants and approved by BART.

(s) "Bridge Indemnity" means the Undertaking Re Forfeiture Deed and HCD Covenants dated as of March 3, 2011, made by BRIDGE Housing Corporation for the benefit of BART.

(t) "Budget" shall mean the budget for construction of the BART Garage that Developer must prepare pursuant to Section 2.04 below.

(u) "Caltrans" means the California Department of Transportation.

(v) "Certificate of Substantial Completion" means a certificate issued by BART pursuant to Section 2.18 below certifying that the BART Garage has been substantially completed except for Punch List items as set forth in more detail in Section 2.18 below.

(w) "City" is defined in Recital B.

(x) "Completion Guarantee" means a guaranty of completion in the form attached hereto as Exhibit E to guarantee Developer's construction obligations for the Phase I Improvements.

(y) "Completion Guarantor" means BRIDGE Housing Corporation.

(z) "Construction" means any work of construction of the Phase I Improvements.

(aa) "County" is defined in Recital B.

(bb) "Default Interest Rate" means ten percent (10%).

(cc) Intentionally Deleted.

(dd) "Developer" means MacArthur Transit Community Partners, LLC, a California limited liability company, or its permitted successor under this Agreement.

(ee) "Developer Representative" is defined in Section 2.21 below. The initial Developer Representative shall be Art May.

(ff) Intentionally Deleted.

(gg) "FDP" means the Final Development Permit approved by the City of Oakland for the Phase I Improvements.

(hh) "Final Plans" means the final and complete detailed architectural and engineering plans and specifications for construction of the BART Garage that will be prepared by Developer and its consultants and approved by BART in accordance with this Agreement.

(ii) "Final Plaza Improvement Plans" means the final plans for the Plaza Improvements approved by BART in accordance with Section 3.03.

(jj) "Final TI Plans" means the final plans for the Transportation Improvements approved by BART in accordance with Section 4.03.

(kk) "Force Majeure" means an event described in Section 6.07 below that causes a delay in performance.

(ll) "Frontage Road Property" means Parcel G on the approved Vesting Tentative Map dated February 28, 2011.

(mm) "Garage Change Order" is defined in Section 2.16(b) below.

(nn) "Garage Completion Certificate" means a certificate issued by BART pursuant to Section 2.18 below certifying that the BART Garage has been completed.

(oo) "Garage Contingency Fund" means a contingency fund in the initial amount equal to the sum of (i) Four Hundred Seventy-Five Thousand Dollars ($475,000)

provided by Developer as a line item in the Garage Budget; (ii) up to Seventy Thousand Dollars ($70,000) from the payment otherwise due from Developer pursuant to Section 7.1(i) of the Option Agreement for costs of the Access Strategies Program; (iii) after completion of the Plaza Improvements, any portion of the PI Contingency Fund (initial amount of $100,000) not used in completing the Plaza Improvements; plus (iv) after completion of the Transportation Improvements, any portion of the TI Contingency Fund (initial amount of $50,000) not used in completing the Transportation Improvements. Any portion of the $70,000 described in item (ii) used as part of the Garage Contingency Fund shall be credited against Developer's payment obligation pursuant to Section 7.1(i) of the Option Agreement, as amended to provide that the total contribution of Developer to the Access Strategies Program shall be One Hundred Forty Thousand Dollars ($140,000), inclusive of any amounts expended pursuant to (iv) above. The Garage Contingency Fund shall be used to fund any changes requested by BART in accordance with Section 2.16(d). The sources of funds for the Garage Contingency Fund shall be used in the order listed in this section 1.01(oo).

(pp) "Garage Budget" means the budget described in Section 2.04, in the initial amount of Twenty-Five Million Eight Hundred Ninety-Six Thousand One Hundred Fifty Dollars ($25,896,150). The budget is the sum of the BART Garage Construction costs, including Developer's fee, if any, the Garage Contingency Fund, and the BART Cost Budget, as those budgeted costs may be revised in accordance with the terms of this Agreement.

(qq) "General Contractor" means the general contractor retained by Developer and approved by BART for the construction of any one or more of the BART Garage, the Plaza Improvements and the Transportation Improvements. "General Contractors" shall mean collectively, the general contractors for the foregoing.

(rr) "Grant Funds" is defined in Recital F.

(ss) "Hazardous Materials" means any substance defined as "hazardous wastes", "hazardous substances", "hazardous materials", "toxic substances" or words to that effect under any applicable current or future federal or state laws or regulations, including petroleum and asbestos.

(tt) "HCD Funding Agreement" is defined in Recital F.

(uu) "Inspector of Record" means the principal inspector representing Developer responsible for quality control and safety of all Construction activities. The Inspector of Record shall not be the same individual as either the Site Representative or the Developer Representative.

(vv) "Intermediate Submission" means the intermediate architectural and engineering plans and specifications for construction of the BART Garage that were prepared by Developer and its consultants and approved by BART in accordance with this Agreement.

(ww) Intentionally Deleted.

(xx) "Option Agreement" is defined in Recital D.

(yy) "Other BART Property" is defined in Recital B.

(zz) "Pass-Through Agreement" is defined in Recital F.

(aaa) "Permit to Enter" is defined in Section 2.10 below.

(bbb) "Phase I Improvements" means, collectively, the BART Garage, the Plaza Improvements, the BART Roadway and the Shuttle Stop.

(ccc) "PI Budget" means the budget described in Section 3.04, consisting of the Plaza Improvements costs, including Developer's fee, if any, the PI Contingency Fund, and the BART PI Cost Budget, as those budgeted costs may be revised in accordance with the terms of this Agreement.

(ddd) "PI Contingency Fund" means a contingency fund in the initial amount of One Hundred Thousand Dollars ($100,000) to be used to fund any changes requested by BART in accordance with Section 3.20(d).

(eee) "PI Coordination Plan" is defined in Section 3.01.

(fff) "PI Maximum Cost" means Two Million Three Hundred Sixty-Six Thousand Seven Hundred Twenty Dollars ($2,366,720), less any amounts reallocated by BART from the PI Contingency Fund to the Garage Contingency Fund.

(ggg) "PI Permit to Enter" is defined in Section 3.09 below.

(hhh) "Plaza" is defined in Recital B above.

(iii) "Plaza Certificate of Completion" means a certificate issued by BART pursuant to Section 3.18 below certifying that the Plaza Improvements have been substantially completed, except for punch list items as further set forth in more detail in Section 3.18.

(jjj) "Plaza Improvement Change Order" means a change in construction of the Plaza Improvements from the construction as contemplated by the approved Plaza Improvement Plans, as set forth in more detail in Section 3.16 below.

(kkk) "Plaza Improvement Plans" means the detailed plans and specifications for construction of the Plaza Improvements approved by BART that Developer will rely on in constructing the Plaza Improvements.

(lll) "Plaza Improvements" means the renovations to the Plaza described generally in Exhibit D to this Agreement.

(mmm)"Project" is defined in Recital C.

(nnn) "Project Site" is defined in Recital B.

(ooo) "Prop 1C Funds" is defined in Recital F.

(ppp) "Punch List" means a list of items for construction of the BART Garage that, pursuant to Section 2.18 below, remain to be completed by Developer.

(qqq) "Remedial Hazardous Materials" means materials (i) containing a Hazardous Materials in concentrations exceeding residential screening levels established by the Regional Water Quality Control Board – San Francisco Bay Region, the Department of Toxic Substances Control, or the United States Environmental Protection Agency Region 9, or exceeding regional background concentrations if greater than the residential screening level; (ii) containing Hazardous Materials at a level that would require additional personnel protective equipment, medical monitoring, or training in excess of two (2) hours to comply with CalOSHA regulations; or (iii) meeting the definition of a hazardous waste contained in Section 25118 of the California Health and Safety Code and Title 22 of the California Code of Regulations.

(rrr) "Shuttle Stop" is defined in Recital E.

(sss) "Site Representative" is defined in Section 2.21 below.

(ttt) "SSWP" means one or more Site Specific Work Plans as required by BART for work in and around the Station and as defined in the BART Facilities Standards.

(uuu) "Station" is defined in Recital C.

(vvv) "TI Certificate of Completion" means a certificate issued by BART pursuant to Section 4.17 below certifying that the Transportation Improvements have been substantially completed, except for punch list items as further set forth in more detail in Section 4.17.

(www) "TI Change Order" means a change in construction of the Transportation Improvements from the construction as contemplated by the approved Transportation Improvement Plans, as set forth in more detail in Section 4.15 below.

(xxx) "TI Contingency Fund" means a contingency fund in the initial amount of Fifty Thousand Dollars ($50,000) to be used to fund any changes requested by BART in accordance with Section 4.15(d).

(yyy) "TI Coordination Plan" is defined in Section 4.01.

(zzz) "TI Funds" is defined in Recital F.

(aaaa) "TI Budget" means the budget described in Section 4.04, consisting of the Transportation Improvements costs, including Developer's fee, if any, the TI Contingency Fund, and the BART TI Cost Budget, as those budgeted costs may be revised in accordance with the terms of this Agreement.

(bbbb) "TI Improvement Area" is defined in Section 4.09 below.

(cccc) "TI Permit to Enter" is defined in Section 4.09 below.

(dddd) "Transit Facilities" means the Station and the real and personal property thereon, including without limitation the rapid transit tracks located thereon, the rapid transit vehicles traveling on those tracks and all of the facilities either existing or to be constructed on the Station located thereon or used in connection with BART's transit functions and the means of access thereto on the Station.

(eeee) "Transit Operations" means the operation of BART's rapid transit rail system and all activities related thereto, including access, egress, passing through turnstiles, purchasing tickets and obtaining information, of the users of those transit vehicles, and the activities such as maintaining and operating the Transit Facilities, that are performed by BART's employees, agents and contractors.

(ffff) "Transportation Improvement Plans" means the detailed plans and specifications for construction of the Transportation Improvements approved by BART that Developer will rely on in constructing the Transportation Improvements.

(gggg) "Transportation Improvements" is defined in Recital F.

1.02 Exhibits to Agreement.

The following exhibits to this Agreement are attached hereto and are incorporated in this Agreement:

Exhibit A	Description of BART Garage Parcel
Exhibit B	Legal Description of Other BART Property
Exhibit C	Map of Project Site
Exhibit D	Description of Plaza Improvements
Exhibit E	Completion Guaranty
Exhibit F	Final Garage Plans
Exhibit G	Garage Budget
Exhibit H	Form of BART Permit to Enter
Exhibit I	List of Key Personnel
Exhibit J	BART Cost Budget
Exhibit K	BART PI Cost Budget
Exhibit L	BART TI Cost Budget

SECTION II.
DESIGN AND CONSTRUCTION OF BART GARAGE

2.01 Overview of Design of BART Garage.

(a) Developer has provided and will provide all necessary planning and design for the BART Garage including the Basis of Design, Intermediate Submission and Final Plans (including plans, specifications, estimates, utility identification and relocation, right of way, engineering and surveying). Such efforts by Developer shall be overseen by the Developer Representative. BART has provided and will continue to provide support, oversight and approvals in the design process.

(b) Developer shall be responsible for the professional quality, technical accuracy and coordination of all designs, drawings, specifications and other services provided by Developer under this Agreement. Such designs, drawings, specifications and other design documents shall be signed and sealed by California Registered Engineers and Architects qualified to perform such design. Developer shall, at no additional cost to BART, correct or revise any errors or deficiencies in the designs, drawings, specifications or other services provided. Developer warrants that all designs, plans, specifications or other services provided by Developer under this Agreement shall be adequate and sufficient to accomplish the purposes of the improvements undertaken to construct the BART Garage and shall be in accordance with this Agreement, the BFS, Approved BFS Variances and applicable codes, ordinances and regulations.

2.02 Previous Plan Approvals; Approval of Final Plans.

Developer has prepared and BART has approved the Basis of Design. After completion of the Basis of Design, Developer shall prepare and BART shall have the right to review and approve the more detailed Intermediate Submission, which approval shall be granted or denied within thirty (30) days after receipt of the Submission. In the event the Intermediate Submission is not approved, BART shall indicate in writing the reasons for disapproval. If Developer disagrees with BART's reasons for disapproval or BART fails to respond timely, Developer may initiate the dispute resolution process described in Section 6.04 below. Upon BART's approval of the Intermediate Submission and in accordance with this section, Developer shall prepare and submit the Final Plans to BART for review and approval. The Final Plans shall be based on Developer's 100% CD Submittal dated May 20, 2011, including or as modified by each of the items listed on Exhibit F to this Agreement. Developer shall consult with BART in preparation of the Final Plans.

Upon receipt of the Final Plans, BART shall review them and notify Developer as to BART's approval or disapproval within thirty (30) days after receipt. In the event that the submitted Final Plans are not approved, BART shall indicate in writing the reasons for disapproval. Developer shall then revise the Final Plans and re-submit them to BART for review and approval following the process set forth in this section for the initial submission of the Final Plans until approved. In the event Developer disagrees with the reasons for BART's disapproval or BART fails to respond timely, Developer may initiate the dispute resolution process described in Section 6.04 below.

In its review and approval process, BART shall not require changes in the Final Plans except to the extent such changes are necessary to cause the Final Plans to conform to the BART Facilities Standards (subject to Approved BFS Variances). BART's prior review and approval does not relieve Developer of the responsibility to conform with the BFS, Approved BFS Variances and applicable codes, ordinances and regulations. An approved request for variances shall be required for deviations from the BFS requirements

2.03 BART Garage Coordination.

Prior to commencing Construction work on the BART Garage, Developer shall submit to BART for its review and approval the BART Garage Coordination Plan providing for interim parking, pedestrian and vehicular access to the Station and remaining surface parking, construction staging during the construction of the BART Garage, and scheduling for tie-ins of communications, fire alarm and other systems in the BART Garage to the existing BART systems. Upon receipt of the BART Garage Coordination Plan, BART shall review it and notify Developer as to approval or disapproval within thirty (30) days after receipt. If not approved by BART within thirty (30) days after receipt, the BART Garage Coordination Plan shall be deemed disapproved. In the event that the submitted BART Garage Coordination Plan is not approved, BART shall indicate in writing the reasons for disapproval. Developer shall then revise the BART Garage Coordination Plan and submit it again to BART for review and approval following the process set forth in this section for the initial submission of the BART Garage Coordination Plan. Developer shall have the right to initiate the dispute resolution process pursuant to Section 6.04 if Developer disagrees with BART reasons for disapproval or BART fails to respond timely within such thirty (30) days period.

2.04 BART Garage Budget.

Prior to entering into this Agreement, Developer prepared and BART approved a preliminary budget for construction of the BART Garage, which is attached to this Agreement as Exhibit G. The Budget provides for construction of the BART Garage for a cost of Twenty-Five Million Eight Hundred Ninety-Six Thousand One Hundred Fifty Dollars ($25,896,150) (the "Garage Budget"). Developer shall have the right to increase the Garage Budget from time to time, provided that Developer demonstrates to BART's reasonable satisfaction there are funds available to cover all budgeted costs under the amended Garage Budget and provided further that the BART Costs are revised to account for any extension of the time to complete construction or other increase in BART Costs directly attributable to changes in the approved Final Plans.

2.05 Construction Contract.

Developer shall use good faith and diligent efforts to enter into a construction contract with a suitable contractor approved by BART (which approval shall not be unreasonably withheld), providing for the contractor to be the General Contractor and to construct the BART Garage for a guaranteed maximum price consistent with the approved Garage Budget. The construction contract shall contain the provisions required by Section V below.

2.06 Construction Bonds.

Developer shall provide, or cause its General Contractor to provide to BART evidence of the issuance of payment and performance bonds in an amount equal to one hundred percent (100%) of the cost of constructing the BART Garage. Such bonds shall be in a form and provided by a bonding company meeting the criteria set forth in the HCD Funding Agreement and shall name BART as an additional payee under the bonds.

2.07 Completion Guarantee.

Prior to commencing work on the BART Garage, Developer shall provide to BART a Completion Guarantee for the BART Garage from the Completion Guarantor. BART shall be a beneficiary of such Completion Guarantee and entitled to enforce all provisions of thereof.

2.08 Permits and Approvals.

Developer shall obtain all governmental permits and approvals necessary to construct the BART Garage, to the extent such permits or approvals are required to construct the BART Garage. BART shall cooperate with and assist Developer in obtaining all such permits and approvals, at no cost to BART and not as a deduction from the Garage Contingency Fund.

2.09 Insurance.

Developer shall provide or shall cause its contractors to provide and maintain the insurance specified in Section 5.02 below.

2.10 Notice to Proceed, Satisfaction of Conditions.

Once Developer has completed all the tasks and obtained all the documentation specified in Sections 2.01 through 2.07 and 2.09 above and all governmental permits and approvals necessary to commence construction of the BART Garage and all other requirements of this Agreement and the BFS to be performed prior to commencement of Construction, Developer [redacted] Permit to Enter") for the BART Garage Parcel. If Developer has not completed all of the tasks and obtained all of the documentation specified above and satisfied all other requirements of this Agreement and the BFS to be performed and satisfied prior to commencement of Construction not later than the outside date specified in Exhibit F of the Option Agreement for commencement of construction of Phase I of the Project (or such later date to which BART and Developer may agree in writing), then BART may enforce the Completion Guarantee.

2.11 Access to Site.

Pursuant to the request of Developer previously submitted to BART, BART shall provide to Developer a Permit to Enter for the purposes of Construction of the BART Garage commencing on or about October 17, 2011. The Permit to Enter shall be in the form attached as Exhibit H.

2.12 Commencement of Construction, Completion.

(a) Developer shall give BART at least twenty-one (21) days' prior notice of the commencement date of any activities that will or likely will have an impact on BART's patrons, which notice shall include a detailed explanation of the patron impact, proposed detours and alternative solutions.

(b) The BART Garage shall be constructed in accordance with the approved Final Plans and the approved BART Garage Coordination Plan, subject to such changes as may be approved pursuant to Section 2.16.

(c) Subject to extensions of time permitted pursuant to Sections 2.16 and 6.07, Developer shall complete Construction of the BART Garage within twelve (12) months of the date by which it was required to commence Construction of the BART Garage pursuant to this section. Completion shall be deemed to be that point in time when Developer is entitled to a Certificate of Substantial Completion. Developer shall complete all remaining work required as a condition to issuance by BART of the Garage Completion Certificate within ninety (90) days following issuance of the Certificate of Substantial Completion.

2.13 Developer's Obligations for Construction.

Developer shall do or cause to be done the following:

(a) Furnish all labor and materials and perform, in a good and workmanlike manner, all of the work for Construction of the BART Garage in accordance with the approved Final Plans.

(b) Supervise and direct the Construction of the BART Garage. Prior to commencing Construction work for the BART Garage Developer shall submit a construction management plan to BART for review and approval (the "Construction Procedures Manual"). Such plan shall detail how Developer will supervise and direct the Construction by the General Contractor and shall include an organization chart showing lines of communication and responsibility and a narrative describing the roles and responsibilities of key staff, including the Inspector of Record, responsible for quality control and safety for the BART Garage. Such efforts by Developer will be overseen by the Site Representative, who shall follow the construction management process as stipulated in the Construction Procedures Manual .

(c) Assure that Site Representative is at the BART Garage Parcel at all times during the Construction of the BART Garage. When the Site Representative is unavailable for more than a partial day (vacation, illness, etc), a substitute acceptable to the BART Representative shall be present and act as the Site Representative. If the Site Representative is not available for a particular part of the work, the BART Representative may, if he or she deems it necessary after discussing by telephone with the Developer Representative, give orders to the General Contractor or any subcontractor to stop such work, and such orders shall be received and obeyed. The BART Representative shall confirm such orders in writing to the Site Representative.

(d) Assure that the BART Representative is given adequate notice of the times and days of Construction so that the BART Representative or her or his designee can be present on or in the vicinity of the BART Garage Parcel during the Construction of the BART Garage.

(e) Resolve, in consultation with BART, any questions involving the interpretation of any the approved Final Plans.

(f) Implement and follow the approved BART Garage Coordination Plan and approved SSWP.

(g) Maintain at the Construction site, all documents relating to Construction of the BART Garage;

(h) Comply with all governmental and BART regulations, including safety regulations, in constructing the BART Garage. Upon the failure of Developer to comply with such regulations following written notice of violation and failure to cure such violation within seven (7) days or sooner if required to avert injury to persons or damage to property, the BART Representative shall have the authority to stop any or all operations of Developer affected by such failure until such failure is remedied. If the failure cannot reasonably be cured within such 7-day period, Developer shall be in compliance with this section if Developer commences the cure within such 7-day period and diligently proceeds to completion, so long as such delay in cure does not endanger persons or property. No part of the time lost due to any such stop orders shall constitute a Force Majeure event unless such stop order was given in the absence of a violation or a failure to cure within the time required above. In no event shall time lost due to any such stop orders be the subject of any request for monetary damages by Developer.

(i) Take all necessary steps to ensure that the prevailing wages provisions of California Labor Code Sections 1720 et seq. are fully met in connection with Construction of the BART Garage.

(j) Prepare and include in all contracts, subcontracts and all other similar agreements applicable provisions as to prevailing wages and insurance coverages set forth in Section V.

(k) Prepare and include in all contracts, subcontracts and other similar agreements applicable provisions as to all fair employment opportunity provisions, as set forth in Section V.

(l) Keep adjoining real property not being used for the Construction free from accumulation of waste materials and rubbish caused by the Construction.

(m) Be responsible, at all times, for collecting all paper, cartons and other debris caused by the Construction.

(n) Assure that all materials furnished shall be new unless stated otherwise in the approved Final Plans, and, when materials are specified to conform to any standard, that the materials delivered to the Construction site bear the manufacturer's label setting forth the specifications of the materials.

(o) Limit Construction activities to the times specified in the FDP or otherwise approved by the City.

(p) Cooperate with other forces and BART. Developer shall not have the sole right to occupy the BART Garage Parcel during the performance of the work, and BART and the owners of non-transit system facilities or their authorized agents reserve the right to enter upon the BART Garage Parcel for the purpose of making necessary connections or repairs to their facilities. Furthermore, BART reserves the right to perform other or additional work at or on the BART Garage Parcel by the use of other forces, provided such work does not hinder or delay the Construction. If Developer is hindered by the work of other forces, written notification shall be made in writing to the BART Representative, who shall take necessary steps to adjust the other work so as not to delay the Construction.

(q) Coordinate with BART for work to be performed by BART forces for the final tie-ins of BART systems for the BART Garage. This obligation includes:

(i) Notifying BART at least three (3) months prior to the intended date that final tie-in of BART systems is required to enable work to be placed on the maintenance support schedule by BART.

(ii) Installing and testing systems-related wiring and equipment sixty (60) days prior to the date that final tie-in of BART systems is required to enable review and approval of installation and testing reports by BART.

(iii) Confirming thirty (30) days prior to the date that final tie-ins of BART systems is required to enable BART to schedule work.

(r) Conduct its operations so as to cause minimal obstruction and inconvenience to the public and have under Construction no greater length or amount of work than can be prosecuted properly with due regard to the rights of the public. If, in the opinion of the BART Representative, an employee of Developer or its General Contractor or subcontractor appears to be acting in a disorderly or reckless manner, or violating BART's safety or security policies, Developer, if the BART Representative so requests, shall at Developer's expense promptly cause such person to be removed and shall not again employ such person on the BART Garage Parcel or otherwise in connection with the Phase I Improvements.

(s) Inspect all materials, supplies and equipment that are used, consumed or incorporated in the BART Garage. In addition, Developer shall conduct a continuous program satisfactory to the BART Representative of Construction quality control for all work performed for the BART Garage. [redacted] Developer shall submit a quality control/quality assurance plan to BART for review and approval. The plan shall be prepared in accordance with the requirements of the BFS Standard Specification Section 01 45 00. Developer shall have primary responsibility for inspecting the work and materials, including the performance of all special inspections by qualified third party special inspectors as required by the BFS, applicable codes and the Final Plans and shall be responsible for ensuring that inspections required by other governmental authorities are performed. Inspections performed by the BART Representative, BART staff or agents are conducted to verify that

Developer has performed its inspections properly. Any observation, verification, inspection or approval of work or materials by BART or the BART Representative shall not relieve Developer of any of Developer's obligations under this Agreement. If, in the opinion of the BART Representative, Developer fails to execute its responsibility for quality control and inspection on any part of the work after receiving written notice thereof and failing to cure any deficiencies in the quality control and inspection process identified in such notice within two (2) business days (unless such cure cannot, in the exercise of reasonable diligence, be completed within that period, in which event that period shall be extended for so long as it shall be reasonably required for the Developer to complete or cause to be completed such cure), BART may, at its option, conduct quality control and inspection activities in lieu of Developer at Developer's expense. Such expense shall be in addition to the reimbursement made to BART pursuant to Section 2.22. Such inspection shall not relieve Developer of its liability for defective or unsuitable work as described in Section 2.17.

(t) Have the charge and care of the work and the materials to be used therein, including materials for which Developer has received partial payment, materials in transit and stored materials, and bear responsibility for protecting the work and materials from loss or damage by the action of the elements or any other cause until the Garage Completion Certificate is issued or earlier relief under Section 2.18 is granted. Developer shall rebuild, repair or restore all injuries, losses, or damage to any portion of the work and materials occasioned by any cause prior to issuance of the Garage Completion Certificate at no cost to BART unless caused by BART or other BART contractors.

(u) Developer and its contractors may utilize the BART Garage Parcel and BART Garage for construction parking prior to establishing substantial completion. Developer shall power wash the surface areas utilized for construction parking prior to requesting preliminary completion inspections.

2.14 Execution of Contracts, Subcontracts and Purchase Orders.

All contracts, subcontracts and purchase orders shall be executed in the Developer's or the General Contractor's name and not as agent for BART, it being expressly understood and agreed that all contractors, subcontractors and material persons shall at all times be deemed to be engaged by Developer or the General Contractor and not by BART. At BART's request, copies of all Construction contracts, subcontracts and purchase orders shall be delivered to BART promptly following execution.

2.15 Payment for Construction Costs.

Developer shall be entitled to reimbursement from the Prop 1C Funds or Agency funds for costs incurred in connection with Construction of the BART Garage in accordance with the Budget and pursuant to the terms of the HCD Funding Agreement and the Agency's agreements with Developer. BART shall have no responsibility for the payment of, or the disbursement of any funds to pay, such costs.

2.16 Procedure for Making Change Orders.

(a) Developer shall inform BART of any minor field change. A minor field change from the Final Plans is one that is not a substantial change, has no adverse effect on the BART Garage and is made to expedite the Construction work in response to field conditions. Changes in exterior design treatment, parking layout, safety features, the quality of building materials or colors shall be deemed not to be minor field changes. If Developer and BART do not agree that a proposed change is a minor field change, then such change shall not be treated as a minor field change, and the parties shall proceed under Section 2.16(b) instead.

(b) Any change (other than a minor field change described in subsection (a)) in the approved Final Plans or in the Construction of the BART Garage from that shown on the approved Final Plans (a "Garage Change Order") shall be effectuated as set forth in this section.

(c) If Developer desires a Garage Change Order, it shall submit to BART a description of the proposed change. BART shall approve or disapprove the Garage Change Order within ten (10) business days following receipt. Any disapproval shall state with particularity the grounds for such disapproval. If not approved (or disapproved with stated reasons for disapproval) by BART within ten (10) business day period, the proposed Garage Change Order shall be deemed disapproved. Any disapproval or deemed disapproval shall be subject to the dispute resolution procedures set forth in Section 6.04. If the Garage Change Order is approved (or deemed approved), Developer shall implement the Garage Change Order and the Budget shall be adjusted accordingly.

(d) If BART desires a Garage Change Order, it shall submit a description of the proposed change to Developer to evaluate and prepare a Garage Change Order for approval by BART. The proposed Garage Change Order shall be signed by the Group Manager of Construction Management for Transit System Development. Within ten (10) business days following receipt of BART's request, Developer shall provide BART with a cost proposal in accordance with Section 2.16(e) below indicating the cost increase or decrease, if any, that would be required to implement the Garage Change Order and any impacts on the time of completion. Within seven (7) business days after the receipt of the notice regarding the effect on the cost of Construction, BART shall notify Developer of BART's approval or disapproval of the change in cost resulting from the Garage Change Order, stating with particularity the reasons for any disapproval. If the change in the cost of Construction is not approved by BART within that seven (7) business day period, the proposed Garage Change Order shall be deemed disapproved. If BART approves the Garage Change Order, Developer shall implement the Garage Change Order, and the amount of the net increase in the Budget resulting from the Garage Change Order shall be deducted from the Garage Contingency Fund. The amount of the net decrease resulting from a Garage Change Order requested by BART or a net decrease pursuant to Section 2.16(c) shall be added to the Garage Contingency Fund. If BART does not approve Developer's cost proposal, BART may nevertheless notify Developer that BART elects to proceed with implementation of the Garage Change Order on a cost plus basis in accordance with the provisions of Section 2.16(f) below. In the event BART so elects, Developer shall implement the Garage Change Order in an efficient and prudent manner and shall submit to BART a cost proposal pursuant to Section 2.21(e) below based on actual labor, materials and equipment used in performance of the such changed work, which shall be subject to the approval of the BART

Representative or designee, which approval shall not be unreasonably withheld provided Developer can demonstrate to the reasonable satisfaction of the BART Representative that the work was performed in an efficient and prudent manner. Developer may add to the costs referenced in Section 2.16(e) below a reasonable amount to cover Developer's construction management fee of five percent (5%), third party fees and financing costs, Developer's general and administrative costs, including in-house legal, and the amount of the net increase in the Budget resulting from the Garage Change Order shall be deducted from the Garage Contingency Fund. In no event shall BART approve, nor shall Developer be required to implement, a BART-directed Garage Change Order the cost of which exceeds the funds then available in the Garage Contingency Fund, including any Access Strategies Program funds, the PI Contingency Fund and/or the TI Contingency Fund included in or reallocated to the Garage Contingency Fund as provided in Section 1.01(oo), or which requires any expenditure not eligible for reimbursement under the HCD Funding Agreement or Developer's funding agreements with the Agency. Any costs in excess of such amounts shall be paid by BART.

(e) The cost breakdown of the cost proposal for changes shall have separate estimates for the direct costs of added work and deleted work for the following categories: labor, materials, equipment rental, subcontract work and other costs. Detailed cost breakdowns as described above shall be submitted for any subcontractor performing work under the Garage Change Order. The cost proposal shall include any compensation or time extension due to the changes in accordance with the provisions of Section 2.16(g) below. If the estimated cost of any such added work is greater that the estimated cost of the deleted work in the same category, the cost proposals shall be the sum of the agreed cost difference plus the applicable allowable percentages for such category of work pursuant to Section 2.16(f) below applied to the estimated cost difference. If the estimated cost of any such deleted category of work is greater than the estimated cost of the added work in the same category, the estimated cost difference shall be multiplied by one hundred five percent (105%). The cost breakdown shall not exceed the limitations on compensation specified in the cost-plus provisions of Section 2.16(f) below.

(f) When the cost of any Garage Change Order is to be determined pursuant to this Section 2.16(f), the determination of the costs shall be made pursuant to the provisions of Article 7 and Article 8 of AIA Document A111-1997, Standard Form of Agreement Between Owner and Contractor, and of Section 7.3.6 of AIA Document A201-1997, General Conditions for the Contract of Construction and the following: the following maximum allowable percentages may be added to costs of labor, materials, equipment rental, subcontract work and design work as described below: Labor and burden – 22%; Materials – 15%; Equipment Rentals – 15%; Subcontract Work – 5%; and Design Work – 5%. These percentages shall cover field office overhead, home office overhead and profit, including but not limited to estimating, clerical support, trailer rental, waste disposal, postage, telephone, and utilities. A maximum of two (2) 5% markups for subcontract work will be granted regardless of the tier of subcontractor that performs the work. The following modifications to the referenced AIA Documents shall apply:

(i) Costs for field office personnel as described in AIA 201-1997 Section 7.3.6.5 and AIA A111-1997 Sections 7.2.2 and 7.2.3 shall be deemed compensated for by the maximum allowable percentage markups in this Section 2.21(f). Supervision shall include all classifications of labor above and including foreworkers who are on site only to

supervise the Garage Change Order work and are not engaged in the actual and direct performance of the work.

(ii) Subcontract costs as described in AIA A111-1997 Section 7.3 shall be required to follow the requirements of this Section 2.16(f) regardless of the tier of the subcontractor which performs the work.

(iii) Costs for field office overhead as described in AIA A111-1997 Section 7.5.4 shall be deemed compensated for by the maximum allowable percentage markups in this Section 2.16(f).

(iv) Costs for insurance, bonding and subguard shall be added to the cost breakdown.

(g) The following provisions shall apply to delays to completion time and any costs related to such delays by reason of changes made by BART:

(i) To the extent that Developer proves that (A) Developer has been delayed in the completion of critical path operations for the BART Garage Construction by reason of changes made by BART under Section 2.16(d), and (B) BART is responsible and Developer is not concurrently responsible for such delay or other concurrent Developer-controlled delay to critical path operations, then an extension of time commensurate with the delay thus caused will be granted to the times of completion under this Agreement.

(ii) To the extent that Developer has proved (A) and (B) in subsection (i) above, and also proves that: (A) Developer has or will suffer actual losses as a result of the delay; (B) but for the BART change, Developer could not have suffered such actual losses; (C) Developer could not have mitigated such actual losses despite taking precautionary and remedial actions; and (D) the delay was not within the contemplation of this Agreement, then Developer shall be entitled to additional compensation as part of the Garage Change Order cost proposal as computed in (iii) below which compensation shall be deducted from the Garage Contingency Fund, as shall any additional BART Costs attributable to the BART-requested change. Unless Developer satisfies the provisions of this subsection (ii), Developer's sole remedy for such delay shall be an extension of time under subsection (i) above.

(iii) Delay costs incurred by Developer shall be understood to include only the reasonable, adequately supported costs incurred for idle time of equipment, necessary payment for idle time of workers, cost of extra moving of equipment and indirect costs for jobsite overhead, but excluding home office overhead. Calculation of costs shall be in accordance with Section 2.16(f).

2.17 Inspections and Warranties.

(a) BART and its authorized representative or agent shall at all times have access to and the right to observe the Construction of the BART Garage and all facilities where the Construction or any part thereof is being fabricated or stored, and Developer shall provide proper facilities for such access and observation. All contracts with the General Contractor or subcontracts relating to the Construction shall provide such access. The Construction will

require inspections and approvals by BART and may require inspections and approvals by other governmental authorities to determine compliance with governmental requirements. Developer and BART shall cause such inspections or approvals by BART to be performed. Developer and BART shall use diligent efforts to cause any other government authorities to undertake any such inspections for which they are responsible. No inspection performed or failed to be performed by BART shall be a waiver of any of Developer's obligations to perform the Construction in accordance with all governmental requirements, the BFS, Approved BFS Variances or the provisions of the Final Plans. Work and materials not meeting the requirements of the BFS, approved BFS variances or Final Plans shall be made acceptable, and unsuitable work or materials may be rejected, notwithstanding that payment for such work or materials may have been previously authorized and included in a progress payment.

(b) In the event that any testing or inspection reveals a failure of the Construction, or a portion thereof, to comply with the requirements of the approved Final Plans, or the governmental requirements, BART may request inspection or testing of any or all of the other similar parts of the Construction. If such additional inspection or testing reveals a failure of the other similar parts of the Construction, the expense of the additional inspection or testing shall be paid out of available Prop 1C Funds, Agency Funds or borne by the Developer or its General Contractor. If such additional inspection or testing does not reveal a failure of the other similar parts of the Construction, the expense of the additional inspection or testing shall be borne by BART. If an inspection or testing reveals a failure of the Construction, or a portion thereof, to comply with the requirements of the approved Final Plans, or the governmental requirements, the Developer shall, at no additional cost to BART, take such steps as are necessary to cause such compliance including, if necessary, removal and replacement of any non-conforming portions of the construction. Prior to the General Contractor correcting the defect revealed by the inspection or test, Developer shall cause the General Contractor to submit to BART the General Contractor's proposed method for correcting such defect. BART shall reasonably approve or disapprove the General Contractor's plan within fifteen (15) days of receipt by BART, which approval shall not be unreasonably withheld. In its review of the General Contractor's proposal, BART shall apply the standard used by the construction industry as a reasonably acceptable methods correcting defects of the type specified by BART. If the General Contractor's proposal is not approved or disapproved by BART within fifteen (15) days of receipt by BART, the General Contractor's proposal shall be deemed disapproved. In such an event, the General Contractor may resubmit the proposal to BART for its consideration. BART shall reasonably approve or disapprove the General Contractor's resubmitted plan within ten (10) days of receipt by BART, which approval shall not be unreasonably withheld. If the General Contractor's resubmitted proposal is not approved or disapproved by BART within ten (10) days of receipt by BART, the resubmitted proposal shall be deemed disapproved. Any disputes regarding the disapproval of the General Contractor's proposal shall be resolved in accordance with Section 6.04 below.

(c) Any work done on BART property beyond the lines and grades shown on the Final Drawings or established by the BART Representative which is done without written authorization shall be considered as unauthorized work. Upon direction of the BART Representative, unauthorized work shall be remedied, removed or replaced at no additional cost to BART.

(d) If BART determines at any time prior to the expiration of the applicable warranty period, as set forth below in this subsection (d), that there are defects in any part of the Construction, BART shall notify Developer in writing and Developer shall cause the General Contractor to correct or cause the defect or failure to be corrected within thirty-five (35) days after Developer's receipt of such written request to Developer (unless such correction cannot, in the exercise of reasonable diligence, be completed within that period, in which event that period shall be extended for so long as it shall be reasonably required for the General Contractor, to complete or cause to be completed such corrections). Prior to the General Contractor correcting the defect specified by BART in the preceding sentence, Developer shall cause the General Contractor to submit to BART the General Contractor's proposed method for correcting such defect. BART shall reasonably approve or disapprove the General Contractor's plan within fifteen (15) days of receipt by BART, which approval shall not be unreasonably withheld. In its review of the General Contractor's proposal, BART shall apply the standard used by the construction industry as a reasonably acceptable methods correcting defects of the type specified by BART. If the General Contractor's proposal is not approved or disapproved by BART within fifteen (15) days of receipt by BART, the General Contractor's proposal shall be deemed disapproved. In such an event, the General Contractor may resubmit the proposal to BART for its consideration. BART shall reasonably approve or disapprove the General Contractor's resubmitted plan within ten (10) days of receipt by BART, which approval shall not be unreasonably withheld. If the General Contractor's resubmitted proposal is not approved or disapproved by BART within ten (10) days of receipt by BART, the resubmitted proposal shall be deemed disapproved. Any disputes regarding the disapproval of the General Contractor's proposal shall be resolved in accordance with Section 6.04 below. Notwithstanding the foregoing, in the event the defect or failure results in an emergency condition causing a threat to health and safety, Developer may be required to correct the defect or failure in a shorter period of time determined by BART, or, if Developer is unwilling or unable to correct the defect or failure in the time determined by BART, BART may correct the defect or failure, in which case, Developer or its General Contractor shall reimburse BART for the costs of correcting the defect or failure promptly following receipt from BART of a detailed invoice for the work. Unless a longer warranty period is obtained from any subcontractor or supplier with respect to the part of the construction performed, the applicable warranty period shall mean the later of: (i) at least one (1) year from the date of issuance of the Certificate of Substantial Completion; or (ii) if corrective work is required, at least six months after the corrective work is completed. Developer shall make good faith and diligent efforts to obtain warranties from the General Contractor, subcontractors and suppliers in accordance with the specifications included in the approved Final Plans. All warranties shall be assignable by the General Contractor or Developer to BART.

2.18 Completion.

(a) When Developer has made a good faith and diligent determination that the BART Garage has been substantially completed in accordance with the approved Final Plans, except for minor work items the completion of which will not impact BART patrons, [redacted] to determine the state of completion of the work. The request shall include a list of the incomplete work items. The request shall be in writing, and received by BART at least seven (7) days in advance of the requested date of the preliminary inspection. Within three (3) days of the date requested by

Developer, BART shall perform the preliminary inspection of the BART Garage in question. Developer shall be represented by the Site Representative, the General Contractor's principal superintendent and such subcontractors and suppliers as may be necessary to answer the questions for BART's inspection team. Certain elements of the work, such as mechanical and electrical work, may be scheduled separately at appointed times in order to keep the preliminary inspection more focused and the number of persons in BART's inspection team to a minimum. Prior to the requested date of the preliminary inspection, Developer shall perform or provide the following, as applicable:

(i) Temporary facilities, except as may be required for Punch List work, shall be removed from the BART Garage Parcel.

(ii) The BART Garage Parcel and all applicable appurtenances and improvements shall be cleaned as specified in BFS Specification Section 01 74 14 – Cleaning.

(iii) Record drawings and specification markups shall be completed, signed and submitted to BART as specified in Section 2.20.

(iv) Operating instructions for equipment shall be properly mounted and posted, the elevator operations and maintenance manuals submitted to and approved by BART (which approval or disapproval with written reasons for same shall be given within thirty (30) days of submission to BART or deemed disapproved, and any disapproval or deemed disapproved shall be subject to the dispute resolution procedures in Section 6.04), all other operations and maintenance manuals submitted to BART, required spare parts delivered, and all demonstrations and training conducted as specified in BFS Specification Sections 01 78 23 – Operations and Maintenance Data, 01 78 44 – Spare Parts and Maintenance Materials, and 01 79 00 Demonstration and Training, respectively.

(v) Guarantees and warranties shall be submitted to BART in accordance with this Agreement and applicable specifications.

(b) BART shall complete its inspection and from the information gathered prepare a Punch List of work to be performed, corrected or completed. Within seven (7) days following completion of those inspections, BART shall issue to the Developer the Punch List. All work on the Punch List shall be completed by the Developer prior to requesting the final inspection.

(c) When all requirements of the above-prepared Punch List have been completed, Developer shall request the final inspection to determine eligibility for issuance of the Certificate of Substantial Completion. The request shall be made in writing to BART at least seven (7) days in advance of requested date for final inspection. The Developer shall be represented by the Site Representative, the General Contractor's principal superintendent and such subcontractors and suppliers as may be necessary to answer the questions for BART's inspection team. Depending on the extensiveness of the Punch List items, certain elements of the work may be scheduled separately for final inspection at appointed times.

(d) If the final inspection determines that the work has been substantially completed in accordance with the BFS, approved BFS variances, the approved Final Plans and

all applicable governmental requirements, and only minor corrective measures are required the corrective work of which will not impact BART patrons, BART will issue a Certificate of Substantial Completion within five (5) business days following completion of the final inspection, based upon Developer's assurance that remaining corrective measures will be completed within the shortest practical time period. The final inspection Punch List listing the corrective measures will be attached to the Certificate of Substantial Completion. Developer shall submit a fixed schedule for completion of the Punch List items, not to exceed thirty (30) days unless completion of such item will reasonably require more than thirty (30) days to complete (but in no event more than ninety (90) days following issuance of the Certificate of Substantial Completion) and the estimated cost of completing each.

(e) If the final inspection determines that the work has not been substantially completed in accordance with the BFS, Approved BFS Variances, the approved Final Plans and all applicable governmental requirements and corrective measures are still required, a new Punch List shall be prepared and issued to Developer based on the information gathered from the final inspection. Developer shall be required to complete this work and then call for another final inspection, following the procedure outlined above.

(f) The issuance of the Certificate of Substantial Completion shall not relieve Developer of the obligation to complete the Punch List items or participate in enforcement of the warranties pursuant to Section 2.17.

(g) After the Certificate of Substantial Completion has been issued, Developer shall diligently pursue completion of the Punch List items. When Developer believes that the Punch List items have been completed and the construction of the BART Garage has been fully completed in accordance with the approved Final Plans, Developer shall notify BART. Such notice shall include a certification from Developer that circumstances set forth in the following subparagraphs (i) through (iii) below are true with no exception for Punch List items:

(i) The BART Garage has been completed in accordance with the approved Final Plans, all operations and maintenance manuals not approved by BART prior to substantial completion have been approved by BART and BART and any other governmental agency with jurisdiction over the BART Garage have approved use of the BART Garage for the purpose for which it was intended;

(ii) Any permits, licenses, or other authorizations required for such use have been issued by the governmental authorities having jurisdiction over the BART Garage (including but not limited to State permits for elevators and Bay Area Air Quality Management District approval for emergency generators); and

(iii) No stop notices or other liens or encumbrances have been filed in connection with the BART Garage or the BART Garage Parcel, as the case may be, or any of the materials incorporated therein or purchased in connection therewith, other than any stop notice or other lien for which Developer or the General Contractor has posted a bond or other security satisfactory to BART.

(h) BART shall complete its inspection and review within fifteen (15) days of receipt of the notice delivered pursuant to subsection (g). Within five (5) days following completion of those inspections, BART shall either issue the Garage Completion Certificate certifying that the BART Garage has been completed in accordance with the approved Final Plans or notify Developer with particularity of the grounds upon which BART is unwilling to issue the Garage Completion Certificate. Notwithstanding anything herein to the contrary, BART and Developer acknowledge and agree that BART shall have no obligation to issue the Garage Completion Certificate unless and until the following improvements have been completed: installation of the new traffic signal at West MacArthur Blvd and Frontage Road; completion of temporary fire access along the Internal Street between West MacArthur Blvd and the north side of the Garage; the City's Fire Services Agency shall have had an opportunity to review the fire safety and life safety systems to verify that they comply with the National Fire Protection Association Standard 13, including the Appendices, 14, and 88A, the California Building Code, and applicable mechanical and plumbing codes.

(i) The issuance of the Garage Completion Certificate shall not relieve Developer of the obligation to provide the warranties described in Section 2.17(d) or participate in corrections pursuant to Section 2.17. However, except with regard to such obligations to provide the warranties and participate in corrections, Developer's obligations with respect to construction of the BART Garage shall be complete upon issuance of the Garage Completion Certificate.

(j) At the request of Developer and subject to an inspection and approval by the BART Representative, BART may by written notice take possession of certain portions of the work of the BART Garage that have been completed in all respects in accordance with the BFS and Final Plans prior to issuance of the Certificate of Substantial Completion. Possession of certain portions of the work prior to issuance of the Certificate of Substantial Completion shall be at the sole discretion of BART. The inspection and approval process for a portion of the work shall be consistent with (a) through (e) above. Developer shall remain responsible for maintaining and protecting such portions of the work until the issuance of the Certificate of Substantial Completion, except for loss or damage resulting from BART's negligence.

2.19 Condition of BART Garage Parcel.

(a) Developer acknowledges and agrees that: BART has never operated the BART Garage Parcel and has owned the BART Garage Parcel only since March 4, 2011; Developer has been responsible for the operations on and security of the BART Garage Parcel Site since BART acquired ownership of it; BART is making the BART Garage Parcel available for construction of the BART Garage in an "as is" condition; and Developer is the sole party responsible for demolition, site preparation, and correction of any soils, subsurface or structural conditions on the BART Garage Parcel (including but not limited to removal, remediation or mitigation of Hazardous Materials and archaeological investigation and excavation). Developer selected the BART Garage Parcel and entered into agreements to purchase it from the prior owners and caused the prior owners to convey the BART Garage Parcel directly to BART. Developer represents that it has: (i) inspected the BART Garage Parcel and all data relating thereto, including, without limitation, soils test reports and data, locations and conditions of adjacent structures and utilities, and governmental requirements that may affect its activities in

constructing the BART Garage; (ii) satisfied itself as to the matters that are or could have been revealed by inspection of the BART Garage Parcel and those matters set forth in inspections and reports obtained by Developer; and (iii) as much or more knowledge and information about the BART Garage Parcel than does BART. In addition, Developer represents that it has verified the accuracy of any documents provided to Developer by BART, and that BART is not responsible for, and makes no representation or warranty as to, the accuracy of any such documents. After having evaluated all foreseen and foreseeable risks, hazards and difficulties in connection with the Construction, Developer further agrees that, except as provided in Section 2.16 or as otherwise expressly provided in this Agreement, the Construction of the BART Garage shall be performed by the Developer in accordance with the Garage Budget and at no cost to BART. BART has made no representation or warranty as to the condition of the BART Garage Parcel or its fitness for the Construction of the BART Garage.

(b) Any and all Remedial Hazardous Materials in, on or under the BART Garage Parcel shall be considered a foreseeable risk.

2.20 <u>As Built Drawings, Record Drawings, and Operations and Maintenance Manuals.</u>

Upon substantial completion of Construction of the BART Garage, Developer shall provide to BART one (1) full-size set of contract documents marked up to accurately represent the as-built condition of the BART Garage and other improvements and facilities on the BART Garage Parcel and six (6) sets of operations and maintenance manuals for those parts of the BART Garage for which such manuals were required in the approved Final Plans. As-built markups shall be available for review and comment by the BART Representative monthly. Within six (6) months after the issuance of the Certificate of Substantial Completion, Developer shall provide to BART CAD record drawings that accurately represent the as-built condition of the BART Garage for all design disciplines and for elevator, fire alarm, fire sprinkler and system shop drawings where detailed design is not shown on the Final Plans. Drawings submitted shall be in compliance with BART's contract drawing preparation requirements and manuals submitted in compliance with BART's specification for operations and maintenance manuals. Operations and maintenance manuals shall be submitted to BART, and the elevator operations and maintenance manuals shall have been approved by BART prior to issuance of the Certificate of Substantial Completion. All manuals submitted to BART shall be approved or any deficiencies itemized in a writing delivered to Developer within thirty (30) days following submission to BART. BART's failure to respond within such thirty (30) day period shall be deemed to constitute a disapproval. Any disapproval or deemed disapproval shall be subject to the dispute resolution procedures set forth in Section 6.04. For any equipment for which BART has not approved the operations and maintenance manuals, BART may permit Developer, at no additional cost to BART, to provide BART with written maintenance agreements from the manufacturer or an acceptable third party to perform all required maintenance and respond to all trouble calls (24-hours-a-day/7-days-a-week) until such time as such manuals are approved by BART. When BART permits Developer to provide written maintenance agreements pending approval of operations and maintenance manuals, the issuance of the Certificate of Substantial Completion may not be withheld for any unapproved operations and maintenance manuals for which BART has received acceptable written maintenance agreements. All documents provided pursuant to this section shall be written in the English language and shall become the property of BART.

2.21 Party Representatives.

(a) Developer shall assign a development manager (the "Developer Representative") and an on-site project manager (the "Site Representative") to coordinate Construction activities with BART. Neither the Developer Representative nor the Site Representative shall be the General Contractor or an employee of the General Contractor. BART also shall assign a resident engineer (the "BART Representative") to coordinate BART's activities under this Agreement with Developer. The respective representatives are authorized to act for the Developer and BART, as the case may be, in implementing the provisions of this Agreement. Developer shall take direction from the BART Representative on all matters requiring coordination with or approval from BART and shall be entitled to rely on such direction as final without consulting with any other BART personnel. In the event Developer disagrees with any such direction, Developer may initiate the dispute resolution process described in Section 6.04.

(b) The parties agree that the personnel listed in Exhibit I shall be designated as key personnel. The parties shall make every effort to insure that the key personnel are available for the duration of the construction of the Phase I Improvements. No party shall remove its key personnel without due cause prior to issuance of the last of the Garage Completion Certificate, the Plaza Certificate of Completion and the TI Certificate of Completion without prior written approval of the other party, which approval shall not be unreasonably withheld. The party's replacement personnel shall be nominated, and approved by the other party, which approval shall not be unreasonably withheld, prior to removal of the then-current key personnel.

2.22 Payment of BART Costs.

Prior to entering into this Agreement, Developer reimbursed BART for BART's costs associated with BART's review and approval of the Basis for Design and Intermediate Submission. Developer shall cause Agency to reimburse BART, from the Prop 1C Funds or Agency funds, for BART's reasonable out-of-pocket costs (including, without limitation, outside legal fees and expenses and fees of experts) and allocated BART staff costs for review of the Final Plans, oversight and inspections for the Construction of the BART Garage, review of any changes to the approved Final Plans and BART staff costs for maintenance support during Construction and modification and tie-ins of new systems (fire alarm, telephone, public address, SCADA, CCTV, etc.) to existing BART systems based on the BART Cost Budget attached hereto as Exhibit J (the "BART Cost Budget"). BART's request for reimbursement shall be made in accordance with the BART Cost Budget, shall be in writing and shall include reasonable detail regarding the costs for which reimbursement is requested. Developer shall include in its next requisition to the Agency following receipt of BART's request for such reimbursement and shall reimburse BART for such costs within ten (10) days following receipt of the Agency's disbursement for such requisition. Developer's obligation to reimburse BART for such costs shall be subject to Agency's timely funding from the Prop 1C Funds or Agency funds of the amount requested in the requisition submitted by Developer. In no event shall BART be entitled to reimbursement of BART costs in excess of the BART Cost Budget, as it may be revised as provided in this Section 2.22, plus any amounts in the Garage Contingency Fund, including any amounts reallocated to the BART Cost Budget or the Garage Contingency Fund pursuant to

Section 5.08 below. The BART Cost Budget assumes that the cost of Construction of the BART Garage will not exceed the sum of Twenty-Five Million Eight Hundred Ninety-Six Thousand One Hundred Fifty Dollars ($25,896,150) and that the BART Garage will achieve substantial completion of Construction within a twelve (12) month period. If the scope of the BART Garage Construction is expanded or the time over which the BART Garage will be constructed is extended resulting in BART's expectation that its costs for the tasks for which BART is to receive reimbursement pursuant to this section will exceed the BART Cost Budget and funds available in the Garage Contingency Fund, then BART shall document the increased costs for a revised BART Cost Budget, which shall include the increased costs not covered by the Garage Contingency Fund, and submit to Developer for Developer's approval within five (5) business days following receipt by Developer of the revised BART Cost Budget from BART. Any dispute concerning the appropriate increase in the BART Cost Budget shall be resolved in accordance with Section 6.04.

2.23 Standards for BART Garage Construction.

(a) The intent of the BFS is to provide guidance and minimum standards for BART's facilities and practices for safeguarding patrons, the general public, and employees, as well as safeguarding property and on-going operations. The BFS regulates and controls the design, construction, quality of materials, use and occupancy, and location, equipment and installation of facilities within the jurisdiction of BART. Where the BFS provides guidance and minimum standards in general terms, but not in complete detail, industry standards for design and construction practice and materials and workmanship for similar public parking garages shall be used.

(b) In the event that a disagreement arises among the parties as to whether an element of the BART Garage has been properly constructed in accordance with the terms of this Agreement, the following order of precedence of documents shall govern: first, this Agreement; then, approved BFS Variances, then the BFS, then approved Final Plans – specifications (construction specifications), then approved Final Plans - drawings (construction drawings) and finally all other agreements.

(i) Utility standards published by municipalities or utility companies and referenced in the BFS shall apply only to materials and workmanship with respect to work that upon completion is to be accepted by a municipality or a utility company. For this limited purpose, these referenced utility standards shall govern over the BFS.

(ii) In case of conflict between the BFS and design and/or construction industry standards referenced in the BFS, such as standard specifications, codes, practices, and the requirements for materials, equipment, work quality, installation, inspections, and tests, that are published and issued by organizations, societies, and associations, the BFS shall govern. Unless otherwise specified, such referenced standards shall apply only to materials, workmanship, and procedure. Commercial terms and legal responsibilities are not intended to be included in the reference. All material, equipment, and workmanship, specified by the number, symbol, or title of such referenced standards shall comply with the latest edition or revision thereof and all amendments and supplements thereto in effect at time for Final Plan approval, except where a particular edition or revision thereof is indicated in the reference.

(c) In the case of differences between small and large scale drawings, the large scale drawings shall govern. Schedules on drawings shall take precedence over conflicting notations on drawings. In the event of discrepancy between any drawing and the figures written thereon, the figures, unless otherwise indicated, shall govern over scaled dimension. In the event of a conflict between codes, regulation, standards or the BFS, the most stringent requirement shall take precedence unless specifically required by BART.

(d) Where BART is the authority having jurisdiction for enforcement of the California Building Standards Code as authorized under California laws, BART shall have the power to render interpretations of the code. Such interpretations shall be in conformance with the intent and purpose of the code. Interpretations made by the Chief Engineer of BART shall be final and not subject to dispute.

(e) Where BART is not the authority having jurisdiction, BART shall have the power to adopt and enforce additional requirements as specified in the BFS that do not conflict with applicable codes or the interpretation thereof by the authority having jurisdiction.

SECTION III.
DESIGN AND CONSTRUCTION OF PLAZA IMPROVEMENTS.

3.01 Overview of Obligations.

Developer shall prepare the Plaza Improvement Plans for the Plaza Improvements. The Plaza Improvement Plans shall include a construction coordination plan dealing with construction staging and pedestrian and vehicular access to the Station and the BART parking lots and with maintenance of utilities, including during construction of the Plaza Improvements (the "PI Coordination Plan"). The coordination plan shall provide for sufficient time to give BART patrons at least twenty-one (21) days' notice of changes in access that will materially affect those patrons. The coordination plan shall conform to the relevant requirements of the SSWP. This section provides for BART's review and approval of the Plaza Improvement Plans and for funding for the construction of the Plaza Improvements.

3.02 Completion of Plans and Specifications, Approvals and Permits.

Upon completion of the draft Plaza Improvement Plans, Developer shall submit them to BART for approval. Developer shall apply for and obtain any governmental permits and approvals necessary to construct the Plaza Improvements in accordance with the Plaza Improvement Plans, including all necessary Caltrans' approvals. BART shall cooperate with and assist Developer in obtaining all such permits and approvals, at no cost to BART.

3.03 Review and Approval of Plaza Improvement Plans.

Developer has prepared and BART is in the process of approving the intermediate submission for the Plaza Improvements. BART shall approve or disapprove, with written reasons for such disapproval, the intermediate submissions within thirty (30) days following submission to BART. In the event BART disapproves the submissions or fails to respond timely, Developer shall have the right to initiate the dispute resolution process described in Section 6.04. Upon BART's approval of the intermediate submission and in accordance with this

section, Developer shall prepare and submit the final plans for the Plaza Improvements to BART for review and approval. The Final Plaza Improvement Plans shall be based on the approved intermediate submission and shall incorporate the standards set forth in BART Facilities Standards to the extent applicable to the Plaza Improvements. Developer shall consult with BART in preparation of the Final Plaza Improvement Plans.

Upon receipt of the Final Plaza Improvement Plans, BART shall review them and notify Developer as to BART's approval or disapproval within thirty (30) days after receipt. In the event that the submitted Final Plaza Improvement Plans are not approved, BART shall indicate in writing the reasons for disapproval. Developer shall then revise the Final Plaza Improvement Plans and re-submit them to BART for review and approval following the process set forth in this section for the initial submission of the Final Plaza Improvement Plans until approved. In the event Developer disagrees with the reasons for BART's disapproval, or BART fails to respond timely, Developer may initiate the dispute resolution process described in Section 6.04

In its review and approval process, BART shall not require any changes in the Final Plaza Improvement Plans from that shown in the intermediate submission, except to the extent such changes are necessary to cause the Final Plaza Improvement Plans to conform to the BART Facilities Standards or Approved BFS Variances. BART's prior review and approval does not relieve Developer of the responsibility to conform with the BFS and applicable codes, ordinances and regulations. An approved request for variances shall be required for deviations from the BFS requirements.

3.04 Budget for Plaza Improvements.

After completion of the Plaza Improvement Plans, Developer shall prepare and submit to BART for approval a budget for construction of the Plaza Improvements, including a Developer contingency for unforeseen conditions, design changes and inspection and final approval issues (the "PI Budget"), which approval or disapproval, with written reasons for disapproval, shall be given within thirty (30) days following submission of the PI Budget to BART. BART shall approve the PI Budget if, in BART's reasonable determination, it represents the cost of construction of the Plaza Improvements. In no event shall the PI Budget exceed the PI Maximum Cost, unless additional funding for the Plaza Improvements is identified and committed to the Project for such purpose. In the event the PI Budget submitted by Developer exceeds the PI Maximum Cost, BART and Developer shall revise the Final Plaza Improvement Plans to reduce the scope to include only improvements which can be completed for the PI Maximum Cost.

3.05 Construction Bonds.

Developer shall cause the General Contractor to provide payment and performance bonds, for one hundred percent (100%) of the cost of the Construction of the Plaza Improvements. Such bonds shall be from a reputable bonding company approved by BART, which approval shall not be unreasonably withheld if the bonding company has sufficient financial strength to provide and make payments on bonds of the size required under this section. BART shall be additional payees for those bonds.

3.06 Construction Guarantee.

Prior to commencing work on the Plaza Improvements, Developer shall provide a Completion Guarantee from the Completion Guarantor for completion of the Plaza Improvements, which Guarantee shall cover only those improvements which the parties have agreed can be constructed for the PI Maximum Cost, including funds in the PI Contingency Fund and the BART PI Cost Budget, and those costs in excess of the PI Budget which result from construction defects or other matters which are the responsibility of the General Contractor under the guaranteed maximum price contract for the Plaza Improvements. BART shall be a beneficiary of the Completion Guarantee and entitled to enforce all provisions thereof.

3.07 Construction Contract.

Developer shall use good faith and diligent efforts to enter into a construction contract with a reputable contractor approved by BART (which approval shall not be unreasonably withheld), providing for the contractor to be the General Contractor and to construct the Plaza Improvements for a guaranteed maximum price consistent with the PI Budget. Developer's construction contract(s) for Construction of the Plaza Improvements shall include the provisions required by Section V.

3.08 Insurance.

Developer shall procure and maintain, or cause its contractors to procure and maintain, insurance in connection with Construction of the Plaza Improvements with coverages and in the amounts specified in Section 5.02 below.

3.09 Commencement of Construction, Satisfaction of Conditions.

Once (a) Developer has completed all the tasks and obtained all the documentation specified in Sections 3.01 through 3.08 above and all other requirements of this Agreement and the BFS to be performed prior to commencement of Construction, then Developer shall notify BART and request that BART issue to Developer a permit to enter (the "PI Permit to Enter") the Plaza to construct the Plaza Improvements. If Developer has not satisfied the conditions to and requested BART's issuance of the PI Permit to Enter not later than one hundred twenty (120) days following BART's written approval of the Final Plaza Improvement Plans, as such date may be extended pursuant to Section 3.16 and 6.07 (or such later date to which BART and Developer may agree in writing), BART shall have the right to enforce the Completion Guarantee.

3.10 Access to Plaza.

Within fourteen (14) days following Developer's request for the PI Permit to Enter as provided in Section 3.09 above, BART shall provide to Developer the PI Permit to Enter the Plaza for the purposes of Construction of the Plaza Improvements. The PI Permit to Enter shall be generally in the form attached as Exhibit H, but revised to reflect the impact Construction activities in the Plaza may have on BART's Transit Operations. At least sixty (60) days prior to the date that Developer expects to request the PI Permit to Enter from BART, Developer shall provide BART notice of the date Developer expects to make the request and the date Developer

expects to begin Construction of the Plaza Improvements. Developer shall request a permit from Caltrans to work on portions of the Plaza located within Caltrans' right-of-way.

3.11 Commencement and Completion of the Plaza Improvements.

Once BART has given the PI Permit to Enter pursuant to Section 3.09 above, Developer shall commence and complete Construction of the Plaza Improvements in accordance with the Plaza Improvement Plans and this Agreement and shall complete construction of the Plaza improvements within twelve (12) months following commencement of Construction, subject to extensions permitted pursuant to Sections 3.16 and 6.07.

3.12 Developer's Obligations for Construction.

Developer shall do the following:

(a) Furnish all labor and materials and perform, in a good and workmanlike manner, all of the work for Construction of the Plaza Improvements in accordance with the approved Plaza Improvement Plans.

(b) Supervise and direct the Construction of the Plaza Improvements. Prior to commencing Construction work for the Plaza Improvements, Developer shall submit a construction management plan to BART for review and approval. Such plan shall detail how Developer will supervise and direct the Construction of the Plaza Improvements by the General Contractor and shall include an organization chart showing lines of communication and responsibility and a narrative describing the roles and responsibilities of key staff, including the Inspector of Record, responsible for quality control and safety for the Plaza Improvements. Such efforts by Developer will be overseen by the Site Representative, who shall follow the construction management process as stipulated in the Construction Procedures Manual.

(c) Assure that Site Representative is at the Plaza at all times during the construction of the Plaza Improvements or readily available by telephone or e-mail. When the Site Representative is unavailable for more than a partial day (vacation, illness, etc.), a substitute acceptable to the BART Representative shall be present and act as the Site Representative. If the Site Representative is absent from a particular part of the work, the BART Representative may, if he or she deems it necessary after discussing by telephone with the Developer Representative, give orders to the General Contractor or any subcontractor to stop such work, and such orders shall be received and obeyed. The BART Representative shall confirm such orders in writing to the Site Representative.

(d) Assure that the BART Representative is given adequate notice of the times and days of Construction so that the BART Representative or her or his designee can be present on or in the vicinity of the Plaza during the construction of the Plaza Improvements.

(e) Resolve, in consultation with BART any questions involving the interpretation of any of the Plaza Improvement Plans.

(f) Implement and follow the approved PI Coordination Plan and approved SSWP.

(g) Maintain at the Construction site all documents relating to construction of the Plaza Improvements.

(h) Comply with all governmental and, to the extent applicable, BART regulations, including safety regulations, in constructing the Plaza Improvements. Upon the failure of Developer to comply with such regulations following written notice of violation and failure to cure such violation within seven (7) days or sooner if required to avert injury to persons or damage to property, the BART Representative shall have the authority to stop any or all operations of Developer affected by such failure until such failure is remedied. If the failure cannot reasonably be cured within such 7-day period, Developer shall be in compliance with this section if Developer commences the cure within such 7-days period and diligently proceeds to completion, so long as such delay in cure does not endanger persons or property. No part of the time lost due to any such stop orders shall constitute a Force Majeure event, unless such stop order was given in the absence of a violation or a failure to cure within the time required. In no event shall time lost due to any such stop orders be the subject of any request for monetary damages by Developer.

(i) Take all necessary steps to ensure that the prevailing wages provisions of the Labor Code Sections 1720 et seq. are fully met in connection with Construction of the Plaza Improvements.

(j) Prepare and include in all contracts, subcontracts and all applicable provisions as to prevailing wages and insurance coverages set forth in Section V.

(k) Prepare and include in all contracts, subcontracts and the applicable provisions of all fair employment opportunity provisions set forth in Section V.

(l) Keep adjoining real property not being used for the Construction free from accumulation of waste materials and rubbish caused by Construction.

(m) Be responsible for collecting, from time to time, all paper, cartons and other debris caused by the Construction.

(n) Assure that all materials furnished shall be new unless stated otherwise in the approved Plaza Improvement Plans, and, when materials are specified to conform to any standard, that the materials delivered to the Construction site bear the manufacturer's label setting forth the specifications of the materials.

(o) Cooperate with other forces and BART. Developer shall not have the sole right to occupy the Plaza during the performance of the work, and BART reserves the right to enter upon the Plaza for the purpose of making change that are necessary for the rearrangement of its facilities or for any other reason. Furthermore, BART reserves the right to perform other or additional work at or on the Plaza by the other forces. If Developer is hindered by the work of other forces, written notification shall be made in writing to the BART Representative, who shall take necessary steps to adjust the other work so as to minimize to the extent reasonably possible any interference with the Construction of the Plaza Improvements.

(p) Coordinate with BART for work to be performed by BART forces for the final tie-ins of BART systems for the Plaza Improvements. This obligation includes:

(i) Notifying BART at least three (3) months prior to the intended date that final tie-in of BART systems is required to enable work to be placed on the maintenance support schedule by BART.

(ii) Installing and testing systems-related wiring and equipment sixty (60) days prior to the date that final tie-in of BART systems is required to enable review and approval of installation and testing reports by BART.

(iii) Confirming thirty (30) days prior to the date that final tie-ins of BART systems is required to enable BART to schedule work.

(q) Conduct its operations so as to cause minimal obstruction and inconvenience to the public and have under Construction no greater length or amount of work than can be prosecuted properly with due regard to the rights of the public. If, in the opinion of the BART Representative, an employee of Developer or its General Contractor or subcontractor appears to be acting in a disorderly or reckless manner, or violating BART's safety or security policies, then Developer, if the BART Representative so requests, shall at its expense promptly cause such person to be removed and shall not again employ such person in connection with the Construction of the Plaza Improvements or any other Phase I Improvements.

(r) Inspect all materials, supplies and equipment that are used, consumed or incorporated in the Plaza Improvements. In addition, Developer shall conduct a continuous program satisfactory to the BART Representative of Construction quality control for all work performed for the Plaza Improvements. Prior to commencing Construction of the Plaza Improvements, Developer shall submit a quality control/quality assurance plan to BART for review and approval. The plan shall be prepared in accordance with the requirements of the BFS Standard Specification Section 01 45 00. Developer shall have primary responsibility for inspecting the work and materials, including the performance of all special inspections by qualified third party special inspectors as required by the BFS, applicable codes and the Final Plaza Improvement Plans and shall be responsible for ensuring that inspections required by other governmental authorities are performed. Inspections performed by the BART Representative, BART staff or agents are conducted to verify that Developer has performed its inspections properly. Any observation, verification, inspection or approval of work or materials by BART or the BART Representative shall not relieve Developer of any of Developer's obligations under this Agreement. If, in the opinion of the BART Representative, Developer fails to execute its responsibility for quality control and inspection on any part of the work after receiving written notice thereof and failing to cure any deficiencies in the quality control and inspection process identified in the notice within two (2) business days (unless such cure cannot, in the exercise of reasonable diligence, be completed within that period, in which event that period shall be extended for so long as it shall be reasonably required for the Developer to complete or cause to be completed such cure), BART may, at its option, conduct quality control and inspection activities in lieu of Developer at Developer's expense. Such expense shall be in addition to the reimbursement made to BART pursuant to Section 3.21. Such inspection shall not relieve Developer of its liability for defective or unsuitable work as described in Section 3.17.

(s) Have the charge and care of the work and the materials to be used therein, including materials for which Developer has received partial payment, materials in transit and stored materials, and bear responsibility for protecting the work and materials from loss or damage by the action of the elements or any other cause until the Plaza Certificate of Completion is issued or earlier relief under Section 3.18 is granted. Developer shall rebuild, repair or restore all injuries, losses, or damage to any portion of the work and materials occasioned by any cause prior to issuance of the Plaza Certificate of Completion at no cost to BART, unless caused by BART or other BART contractors.

3.13 Execution of Contracts, Subcontracts and Purchase Orders.

All contracts, subcontracts and purchase orders shall be executed in Developer's or the General Contractor's name and not as agent for BART, it being expressly understood and agreed that all contractors, subcontractors and material persons shall at all times be deemed to be engaged by Developer or the General Contractor and not by BART. At BART's request, copies of all construction contracts, subcontracts and purchase orders shall be delivered to BART within a reasonable time following such request.

3.14 Payment for Construction Costs of Plaza Improvements.

For Construction of the Plaza Improvements, Developer shall be entitled to receive from the Grant Funds or Prop 1C Funds reimbursement of Developer's actual out-of-pocket costs for constructing the Plaza Improvements as shown in the PI Budget, including any BART-requested Plaza Improvement Change Order payable from the PI Contingency Fund or otherwise permitted pursuant to Section 3.16 below. In the event the cost of constructing the Plaza Improvements, including any approved Plaza Improvement Change Orders, exceeds the PI Maximum Cost, the Final Plaza Improvement Plans shall be revised to reduce the scope of the improvements to those which can be completed for the PI Maximum Cost, unless BART or Developer obtains and commits additional funds to pay all costs in excess of the PI Maximum Cost. Developer shall have the right to reallocate costs among line items, including reallocation of the cost savings in any line item of the PI Budget to other line items or to the contingency.

3.15 Payment Procedure

Developer shall be entitled to reimbursement from the Grant Funds or Prop 1C Funds for all costs incurred in connection with the Construction of the Plaza Improvements in accordance with the PI Budget and pursuant to the terms of the Pass-Through Agreement and the HCD Funding Agreement.

3.16 Procedure for Making Plaza Improvement Change Orders.

(a) Developer shall inform BART of any minor field change. A minor field change from the approved Plaza Improvement Plans is a change that is not a substantial change, has no adverse effect on the matter for which BART approval is required pursuant to Section 3.03 above and is made to expedite the construction work in response to field conditions. With respect to the Plaza Improvements, changes in exterior design, lighting, signage, treatment, safety features, quality of building materials or colors shall be deemed not to be minor field changes. If Developer and BART do not agree that a proposed change is a minor field change,

then such change shall not be treated as a minor field change and the parties shall proceed under Section 3.16(b) instead.

(b) Any change (other than a minor field change described in subsection (a)) in the approved Plaza Improvement Plans that would not cause the aggregate PI Budget to be exceeded shall be effectuated through a Plaza Improvement Change Order as set forth in this section. In addition, any change (other than a minor field change described in subsection (a)) in the Plaza Improvement Plans that would affect access to and operation and maintenance of the Transit Facilities shall be effectuated through a Plaza Improvement Change Order. No change which would cause the total cost of the Plaza Improvements to exceed the PI Maximum Cost shall be authorized unless additional funding to cover the added cost is identified and committed or the Final Plaza Improvement Plans are revised to eliminate work which otherwise reduces the PI Budget by an equal amount.

(c) If Developer desires a Plaza Improvement Change Order, it shall submit to BART a description of the proposed change and the impact of the change on the approved PI Budget. Within ten (10) days following the submittal, BART shall approve or disapprove the Plaza Improvement Change Order, which approval shall not unreasonably be withheld. Any disapproval shall state with particularity the grounds for such disapproval. If not approved by BART within that ten (10) day period, the proposed Plaza Improvement Change Order shall be deemed disapproved. Any disapproval or deemed disapproval shall be subject to the dispute resolution procedures set forth in Section 6.04. If the proposed Plaza Improvement Change Order is approved, Developer shall implement the change and, if applicable, the PI Budget shall be adjusted accordingly.

(d) If BART desires a Plaza Improvement Change Order, BART shall submit the proposed change to Developer. The proposed Plaza Improvement Change Order shall be signed by the Group Manager of Construction Management for Transit System Development. Within ten (10) business days following receipt, Developer shall prepare a Plaza Improvement Change Order for the proposed change and notify BART of the cost increase or decrease, if any, that would be required to implement the Plaza Improvement Change Order. Within seven (7) business days following receipt of the notice regarding the effect on the cost of Construction, BART shall notify Developer of BART's approval or disapproval of the proposed Plaza Improvement Change Order. BART shall not approve any Plaza Improvement Change Order which is not payable in full from the PI Contingency Fund or other funds committed to the Plaza Improvements by BART, unless it eliminates other elements of the Plaza Improvements costing an equal amount. If not approved by BART within seven (7) days following the submittal by Developer of the proposed Plaza Improvement Change Order, the Plaza Improvement Change Order shall be deemed disapproved. If the Plaza Improvement Change Order is approved by BART, then Developer shall implement the Plaza Improvement Change Order, and, if applicable, the PI Budget shall be adjusted accordingly, and the amount of the net increase in the PI Budget resulting from the Plaza Improvement Change Order shall be deducted from the PI Contingency Fund. The amount of the net decrease resulting from a Plaza Improvement Change Order requested by BART or a net decrease pursuant to Section 3.16(c) shall be added to the PI Contingency Fund. If BART does not approve Developer's cost proposal, BART may nevertheless notify Developer that BART elects to proceed with implementation of the Plaza Improvement Change Order on a cost plus basis in accordance with the provisions of

Section 3.16(f) below, provided funds sufficient to cover the Plaza Improvement Change Order are available in the PI Contingency Fund or are provided by BART prior to commencement of the work. In the event BART so elects, Developer shall implement the Plaza Improvement Change Order in an efficient and prudent manner and shall submit to BART a cost proposal pursuant to Section 3.16(e) below based on actual labor, materials and equipment used in performance of the such changed work, which shall be subject to the approval of the BART Representative or designee, which approval shall not be unreasonably withheld provided Developer can demonstrate to the reasonable satisfaction of the BART Representative that the work was performed in an efficient and prudent manner. Developer may add to the costs referenced in Section 3.16(e) below a reasonable amount to cover Developer's construction management fee of five percent (5%), third party fees and financing costs, Developer's general and administrative costs, including in-house legal , and the amount of the net increase in the PI Budget resulting from the Plaza Improvement Change Order shall be deducted from the PI Contingency Fund. Any costs in excess of amounts in the PI Contingency Fund shall be paid by BART.

(e) The cost breakdown of the cost proposal for changes shall have separate estimates for the direct costs of added work and deleted work for the following categories: labor, materials, equipment rental, subcontract work and other costs. Detailed cost breakdowns as described above shall be submitted for any subcontractor performing work under the Plaza Improvement Change Order. The cost proposal shall include any compensation or time extension due to the changes in accordance with the provisions of Section 3.16(g) below. If the estimated cost of any such added work is greater that the estimated cost of the deleted work in the same category, the cost proposals shall be the sum of the agreed cost difference plus the applicable allowable percentages for such category of work pursuant to Section 3.16(f) below applied to the estimated cost difference. If the estimated cost of any such deleted category of work is greater than the estimated cost of the added work in the same category, the estimated cost difference shall be multiplied by one hundred five percent (105%). The cost breakdown shall not exceed the limitations on compensation specified in the cost-plus provisions of Section 3.16(f) below.

(f) When the cost of any Plaza Improvement Change Order is to be determined pursuant to this Section 3.16(f), the determination of the costs shall be made pursuant to the provisions of Article 7 and Article 8 of AIA Document A111-1997, Standard Form of Agreement Between Owner and Contractor, and of Section 7.3.6 of AIA Document A201-1997, General Conditions for the Contract of Construction and the following: the following maximum allowable percentages may be added to costs of labor, materials, equipment rental, subcontract work and design work as described below: Labor and burden) – 22%; Materials – 15%; Equipment Rentals – 15%; Subcontract Work – 5%; and Design Work – 5%. These percentages shall cover field office overhead, home office overhead and profit, including but not limited to estimating, clerical support, trailer rental, waste disposal, postage, telephone, and utilities. A maximum of two (2) 5% markups for subcontract work will be granted regardless of the tier of subcontractor that performs the work. The following modifications to the referenced AIA Documents shall apply:

(i) Costs for field office personnel as described in AIA 201-1997 Section 7.3.6.5 and AIA A111-1997 Sections 7.2.2 and 7.2.3 shall be deemed compensated for

by the maximum allowable percentage markups in this Section 3.20(f). Supervision shall include all classifications of labor above and including foreworkers who are on site only to supervise the Change Order work and are not engaged in the actual and direct performance of the work.

(ii) Subcontract costs as described in AIA A111-1997 Section 7.3 shall be required to follow the requirements of this Section 3.16(f) regardless of the tier of the subcontractor that performs the work.

(iii) Costs for field office overhead as described in AIA A111-1997 Section 7.5.4 shall be deemed compensated for by the maximum allowable percentage markups in this Section 3.16(f).

(iv) Costs for insurance, bonding and subguard shall be added to the cost breakdown.

(g) The following provisions shall apply to delays to completion time and any costs related to such delays by reason of changes made by BART:

(i) To the extent that Developer proves that (A) Developer has been delayed in the completion of critical path operations for the Plaza Improvements Construction by reason of changes made by BART under Section 3.16(d), and (B) BART is responsible and Developer is not concurrently responsible for such delay or other concurrent Developer-controlled delay to critical path operations, then an extension of time commensurate with the delay thus caused will be granted to the times of completion under this Agreement.

(ii) To the extent that (A) and (B) in subsection (i) above apply and Developer also demonstrates that and (A) Developer has or will suffer actual losses as a result of the delay; (B) but for the BART change, Developer could not have suffered such actual losses; (C) Developer could not have mitigated such actual losses despite taking precautionary and remedial actions; and (D) the delay was not within the contemplation of this Agreement, then Developer shall be entitled to additional compensation as part of the Plaza Improvement Change Order cost proposal as computed in (iii) below, which compensation shall be deducted from the PI Contingency Fund, as shall any additional BART Costs attributable to the BART-requested change. If funds available in the PI Contingency Fund are inadequate to cover such costs, then the scope of work of the Plaza Improvements shall be revised so that the Plaza Improvements Budget, including the costs referred to herein, does not exceed the PI Maximum Cost. Unless Developer satisfies the provisions of this subsection (ii), Developer's sole remedy for such delay shall be an extension of time under subsection (i) above.

(iii) Delay costs incurred by Developer shall be understood to include only the reasonable, adequately supported costs incurred for idle time of equipment, necessary payment for idle time of workers, cost of extra moving of equipment and indirect costs for jobsite overhead, but excluding home office overhead. Calculation of costs shall be in accordance with Section 3.16(f).

3.17 Inspections and Warranties.

(a) BART shall at all times have access to and the right to observe the Construction of the Plaza Improvements and all facilities where the Construction or any part thereof is being fabricated or stored, and Developer shall provide proper facilities for such access and observation. All contracts with the General Contractor or subcontracts relating to the Construction shall provide such access. The Construction may require inspections and approvals by Caltrans to determine compliance with its requirements. Developer, in consultation with BART, shall cause such inspections or approvals to be performed. No inspection performed or failed to be performed by BART shall be a waiver of any of Developer's obligations to perform the construction in accordance with all governmental requirements (including those of Caltrans), the BFS, Approved BFS Variances or the provisions of the approved Plaza Improvement Plans.

(b) In the event that any testing or inspection reveals a failure of the Construction, or a portion thereof, to comply with the BFS requirements, Approved BFS Variances or the approved Plaza Improvement Plans, or the governmental requirements, BART may request inspection or testing of any or all of the other similar parts of the Construction of the Plaza Improvements and any other element of the Plaza Improvements affecting access to and operation and maintenance of the Transit Facilities. If such additional inspection or testing reveals a failure of other similar parts of the Construction, the expense of the additional inspection or testing shall be funded by Grant Funds, Agency Funds, Developer or its General Contractor. If such additional inspection or testing does not reveal a failure of the other similar parts of the Construction, the expense of the additional inspection or testing shall be borne by BART. If an inspection or testing reveals a failure of the Construction or a portion thereof to comply with the requirements of the approved Plaza Improvement Plans, or the governmental requirements, Developer shall take such steps as are necessary to cause such compliance including, if necessary, removal and replacement of any non-conforming portions of the Construction. Prior to the General Contractor correcting the defect revealed by the inspection or test, Developer shall cause the General Contractor to submit to BART the General Contractor's proposed method for correcting such defect. BART shall reasonably approve or disapprove the General Contractor's plan within fifteen (15) days of receipt by BART, which approval shall not be unreasonably withheld. In its review of the General Contractor's proposal, BART shall apply the standard used by the construction industry as a reasonably acceptable methods correcting defects of the type specified by BART. If the General Contractor's proposal is not approved or disapproved by BART within fifteen (15) days of receipt by BART, the General Contractor's proposal shall be deemed disapproved. In such an event, the General Contractor may resubmit the proposal to BART for its consideration. BART shall reasonably approve or disapprove the General Contractor's resubmitted plan within ten (10) days of receipt by BART, which approval shall not be unreasonably withheld. If the General Contractor's resubmitted proposal is not approved or disapproved by BART within ten (10) days of receipt by BART, the resubmitted proposal shall be deemed disapproved. Any disputes regarding the disapproval of the General Contractor's proposal shall be resolved in accordance with Section 6.04 below.

(c) If BART determines at any time prior to the expiration of the applicable warranty period, as set forth below in this subsection (c), that there are defects in any part of the Construction of the Plaza Improvements or any other element of the Plaza Improvements affecting access to and operation and maintenance of the Transit Facilities, BART shall notify

Developer in writing, and Developer shall cause the General Contractor to correct or cause the defect or failure to be corrected within thirty-five (35) days after Developer's receipt of such written request to Developer (unless such correction cannot, in the exercise of reasonable diligence, be completed within that period, in which event that period shall be extended for so long as it shall be reasonably required for the General Contractor to complete or cause to be completed such corrections). Prior to the General Contractor correcting the defect specified by BART in the preceding sentence, Developer shall cause the General Contractor to submit to BART the General Contractor's proposed method for correcting such defect. BART shall reasonably approve or disapprove the General Contractor's plan within fifteen (15) days of receipt by BART, which approval shall not be unreasonably withheld. In its review of the General Contractor's proposal, BART shall apply the standard used by the construction industry as a reasonably acceptable methods correcting defects of the type specified by BART. If the General Contractor's proposal is not approved or disapproved by BART within fifteen (15) days of receipt by BART, the General Contractor's proposal shall be deemed disapproved. In such an event, the General Contractor may resubmit the proposal to BART for its consideration. BART shall reasonably approve or disapprove the General Contractor's resubmitted plan within ten (10) days of receipt by BART, which approval shall not be unreasonably withheld. If the General Contractor's resubmitted proposal is not approved or disapproved by BART within ten (10) days of receipt by BART, the resubmitted proposal shall be deemed disapproved. Any disputes regarding the disapproval of the General Contractor's proposal shall be resolved in accordance with Section 6.04 below. Notwithstanding the foregoing, in the event the defect or failure results in an emergency condition causing a threat to health and safety in connection with the Transit Facilities, Developer may be required to correct the defect or failure in a shorter period of time determined by BART, or, if Developer is unwilling or unable to correct the defect or failure in the time determined by BART, BART may correct the defect or failure, in which case, Developer or its General Contractor shall reimburse BART for the costs of correcting the defect or failure promptly following receipt form BART of a detailed invoice for the work. Unless a longer warranty period is obtained from any subcontractor or supplier with respect to the part of the Construction performed, the applicable warranty period shall mean the later of: (i) at least one (1) year from the date of substantial completion of the applicable portion of the Plaza Improvements; or (ii) if corrective work is required at least six months after the corrective work is completed. Developer shall make good faith and diligent efforts to obtain warranties from the General Contractor, subcontractors and suppliers in accordance with the specifications included in the Plaza Improvement Plans. All warranties shall be assignable by the General Contractor or Developer to BART.

3.18 Plaza Improvements Completion

When Developer has made a good faith and diligent determination that the Plaza Improvements have been substantially completed in accordance with the approved Plaza Improvement Plans, except for minor work items the completion of which will not impact BART patrons, Developer shall so notify BART and request a preliminary final inspection to determine the state of completion of the work. The request shall include a list of the incomplete work items. The request shall be in writing and received by the BART at least seven (7) days in advance of the requested date of the preliminary inspection. Within three (3) days of the date requested by Developer, BART shall perform the preliminary inspection of the Plaza Improvements. Developer shall be represented by the Site Representative, the General

Contractor's principal superintendent and such subcontractors and suppliers as may be necessary to answer the questions for the BART inspection team. BART shall complete its inspection and from the information gathered prepare a punch list of work to be performed, corrected or completed. When all requirements of the above-prepared punch list have been completed, Developer shall request the final inspection to determine eligibility for issuance of the Plaza Certificate of Completion. If the final inspection determines that the work has been substantially completed in accordance with the BFS and the approved Plaza Improvement Plans, and only minor corrective measures are required, the corrective work of which will not impact BART patrons, BART will issue a Plaza Certificate of Completion, based upon Developer's assurance that remaining corrective measures will be completed within the shortest practical time period.

3.19 Condition of Plaza.

Developer agrees that BART is making the Plaza available for construction of the Plaza Improvements in an "as is" condition and that Developer is solely responsible for demolition, site preparation, and correction of any soils, subsurface or structural conditions on the Plaza (including but not limited to removal, remediation or mitigation of Hazardous Materials) and for otherwise putting the Plaza in a condition suitable for construction of the Plaza Improvements. Developer represents that it has inspected the Plaza and all data relating thereto, including, without limitation, soils test reports and data, locations and conditions of adjacent structures and utilities, and governmental requirements that may affect Developer's activities in constructing the Plaza Improvements, and has satisfied itself as to the conditions thereof. In addition, Developer represents that it has verified the accuracy of any documents provided to Developer by BART and that BART is not responsible for, and makes no representatives or warranties as to, the accuracy of any such documents. BART makes no warranty or representation as to the condition of the Plaza or its fitness for construction of the improvements contemplated to be constructed thereon under this Agreement. Developer will assume the risks covered by, and agrees to guarantee the full performance by the General Contractor for the Plaza Improvements of the contract for construction of the Plaza Improvements. In the event there are any Change Orders or unforeseen conditions (including without limitation any remediation, removal or mitigation of Hazardous Materials required by applicable law or governmental regulatory agencies) the cost of which is not covered by the price set forth in the Plaza Improvements construction contract and that would increase the cost in excess of the PI Maximum Cost, Developer shall complete any clean-up of discovered Hazardous Materials required by applicable law or governmental regulatory agencies, the cost of such clean-up or Change Order shall be added to the PI Budget and BART shall agree upon a reduction in scope of the Plaza Improvements, as provided in Section 3.14 hereof, so that the revised PI Budget shall not exceed the PI Maximum Cost. In the event the cost of any required remediation of Hazardous Materials discovered during demolition and site preparation exceeds the PI Maximum Cost, Developer shall be obligated to complete, at no cost to BART, the required remediation and shall return the Plaza area to its prior condition, but shall not be obligated to complete any other Plaza Improvements.

3.20 As Built Drawings, Record Drawings, and Operations and Maintenance Manuals

Upon substantial completion of Construction of the Plaza Improvements, Developer shall provide to BART one (1) full-size set of contract documents marked up to accurately represent the as-built condition of the Plaza Improvements and other improvements and facilities on the

Other BART Property and six (6) sets of operations and maintenance manuals for those parts of the Plaza Improvements for which such manuals were required in the approved Final Plaza Improvement Plans. Copies of as-built markups shall be submitted to the BART Representative monthly for review and comment. Within six (6) months after the issuance of the Plaza Certificate of Completion, Developer shall provide to BART CAD record drawings that accurately represent the as-built condition of the Plaza Improvement for all design disciplines and for elevator, fire alarm, fire sprinkler and system shop drawings where detailed design is not shown on the Final Plaza Improvement Plans. Drawings submitted shall be in compliance with BART's contract drawing preparation requirements and manuals submitted in compliance with BART's specification for operations and maintenance manuals. Operations and maintenance manuals shall be submitted and approved by BART prior to issuance of the Plaza Certificate of Completion. BART shall approve or provide an itemization of any deficiencies in a writing delivered to Developer within thirty (30) days following submission to BART. BART's failure to respond within such thirty (30) day period shall be deemed to constitute a disapproval. Any disapproval or deemed disapproval shall be subject to the dispute resolution procedures set forth in Section 6.04. For any equipment for which BART has not approved the operations and maintenance manuals, BART may permit Developer, at no additional cost to BART, to provide BART with written maintenance agreements from the manufacturer or an acceptable third party to perform all required maintenance and respond to all trouble calls (24-hours-a-day/7-days-a-week) until such time as such manuals are approved by BART. When BART permits Developer to provide written maintenance agreements pending approval of operations and maintenance manuals, the issuance of the Plaza Certificate of Completion may not be withheld for any unapproved operations and maintenance manuals for which BART has received acceptable written maintenance agreements. All documents provided pursuant to this section shall be written in the English language and shall become the property of BART.

3.21 Payment of BART Costs.

BART shall be entitled to reimbursement from the Grant Funds for BART's reasonable out-of-pocket costs (including, without limitation, outside legal fees and expenses and fees of experts) and allocated BART staff costs for review of the Plaza Improvement Plans, oversight and inspections for the Construction of the Plaza Improvements, review of any changes to the approved Plaza Improvement Plans and BART staff costs for maintenance support during Construction and modification and tie-ins of new systems (fire alarm, telephone, public address, SCADA, CCTV, etc.) to existing BART systems based on the BART PI Cost Budget attached hereto as Exhibit K (the "BART PI Cost Budget"). BART's request for reimbursement shall be made in accordance with the BART PI Cost Budget, shall be in writing and shall include reasonable detail regarding the costs for which reimbursement is requested. Developer shall include in its next requisition to BART following receipt of BART's requisition request and shall reimburse BART for such costs within ten (10) days following receipt of the disbursement for such requisition. In no event shall BART be entitled to reimbursement of BART costs in excess of the BART PI Cost Budget plus any amounts available in the PI Contingency Fund. The BART PI Cost Budget assumes that the Plaza Improvements will be constructed over a twelve (12) month period. If the scope of Construction is expanded or the time over which the Plaza Improvements will be constructed is extended (other than due to any Change Order requested by BART or due to any delay caused by BART) resulting in BART's expectation that its costs for the tasks for which BART is to receive reimbursement pursuant to this section will

exceed the BART PI Cost Budget, then BART shall document the increased costs for a revised BART PI Cost Budget, which shall include the increased costs, provided that the BART PI Costs, when combined with all other costs of construction of the PI Improvements, may not in the aggregate exceed the PI Maximum Cost.

3.22 Standards for Plaza Improvements Construction.

(a) The intent of the BFS is to provide guidance and minimum standards for BART's facilities and practices for safeguarding patrons, the general public, and employees, as well as safeguarding property and on-going operations. The BFS regulates and controls the design, construction, quality of materials, use and occupancy, and location, equipment and installation of facilities within the jurisdiction of BART. Where the BFS provides guidance and minimum standards in general terms, but not in complete detail, industry standards for design and construction practice and materials and workmanship for similar public pedestrian plaza shall be used.

(b) In the event that a disagreement arises among the parties as to whether an element of the Plaza Improvements has been properly constructed in accordance with the terms of this Agreement, the following order of precedence of documents shall govern: first, this Agreement; then, approved BFS Variances, then the BFS, then approved Final Plaza Improvement Plans – specifications (construction specifications), then approved Final Plaza Improvement Plans – drawings (construction drawings) and finally all other agreements.

(i) Utility standards published by municipalities or utility companies and referenced in the BFS shall apply only to materials and workmanship with respect to work that upon completion is to be accepted by a municipality or a utility company. For this limited purpose, these referenced utility standards shall govern over the BFS.

(ii) In case of conflict between the BFS and design and/or construction industry standards referenced in the BFS, such as standard specifications, codes, practices, and the requirements for materials, equipment, work quality, installation, inspections, and tests, that are published and issued by organizations, societies, and associations, the BFS shall govern. Unless otherwise specified, such referenced standards shall apply only to materials, workmanship, and procedure. Commercial terms and legal responsibilities are not intended to be included in the reference. All material, equipment, and workmanship, specified by the number, symbol, or title of such referenced standards shall comply with the latest edition or revision thereof and all amendments and supplements thereto in effect at time for Final Plaza Improvement Plan approval, except where a particular edition or revision thereof is indicated in the reference.

(c) In the case of differences between small and large scale drawings, the large scale drawings shall govern. Schedules on drawings shall take precedence over conflicting notations on drawings. In the event of discrepancy between any drawing and the figures written thereon, the figures, unless otherwise indicated, shall govern over scaled dimension. In the event of a conflict between codes, regulation, standards or the BFS, the most stringent requirement shall take precedence unless specifically required by BART.

(d) Where BART is the authority having jurisdiction for enforcement of the California Building Standards Code as authorized under California laws, BART shall have the power to render interpretations of the code. Such interpretations shall be in conformance with the intent and purpose of the code. Interpretations made by the Chief Engineer of BART shall be final and not subject to dispute.

(e) Where BART is not the authority having jurisdiction, BART shall have the power to adopt and enforce additional requirements as specified in the BFS that do not conflict with applicable codes or the interpretation thereof by the authority having jurisdiction.

SECTION IV.
DESIGN AND CONSTRUCTION OF TRANSPORTATION IMPROVEMENTS

4.01 Overview of Obligations.

Developer shall prepare the Transportation Improvement Plans for the Transportation Improvements. The Transportation Improvement Plans shall include a construction coordination plan dealing with construction staging and pedestrian and vehicular access to the Station and the BART parking lots and with maintenance of utilities, including during construction of the Transportation Improvements (the "TI Coordination Plan"). The coordination plan shall provide for sufficient time to give BART patrons at least twenty-one (21) days' notice of changes in access that will materially affect those patrons. The coordination plan shall conform to the relevant requirements of the SSWP. This section provides for BART's review and approval of the Transportation Improvement Plans and for funding for the construction of the Transportation Improvements.

4.02 Completion of Plans and Specifications, Approvals and Permits.

Upon completion of the draft Transportation Improvement Plans, [redacted]. Developer shall apply for and obtain any governmental permits and approvals necessary to construct the Transportation Improvements in accordance with the Transportation Improvement Plans, including all necessary Caltrans' approvals. BART shall cooperate with and assist Developer in obtaining all such permits and approvals, at no cost to BART.

4.03 Review and Approval of Transportation Improvement Plans.

Developer has prepared and BART is in the process of approving the intermediate submission for the Transportation Improvements. BART shall approve or disapprove, with written reasons for any disapproval, the intermediate submissions within thirty (30) days following submission to BART. In the event BART disapproves the submissions or fails to respond timely, Developer shall have the right to initiate the dispute resolution process described in Section 6.04. Upon BART's approval of the intermediate submission and in accordance with this section, Developer shall prepare and submit the final plans for the Transportation Improvements to BART for review and approval. The Final TI Plans shall be based on the approved intermediate submission and shall incorporate the standards set forth in BART Facilities Standards to the extent applicable to the Transportation Improvements. Developer shall consult with BART in preparation of the Final TI Plans.

Upon receipt of the Final TI Plans, BART shall review them and notify Developer as to BART's approval or disapproval within thirty (30) days after receipt. In the event that the submitted Final TI Plans are not approved, BART shall indicate in writing the reasons for disapproval. Developer shall then revise the Final TI Plans and re-submit them to BART for review and approval following the process set forth in this section for the initial submission of the Final TI Plans until approved. In the event Developer disagrees with the reasons for BART's disapproval or BART fails to respond timely, Developer may initiate the dispute resolution process described in Section 6.04.

In its review and approval process, BART shall not require any changes in the Final TI Plans from that shown in the intermediate submission, except to the extent such changes are necessary to cause the Final TI Plans to conform to the BART Facilities Standards. BART's prior review and approval does not relieve Developer of the responsibility to conform with the BFS and applicable codes, ordinances and regulations. An approved request for variances shall be required for deviations from the BFS requirements.

4.04 Budget for Transportation Improvements.

After completion of the Transportation Improvement Plans, Developer shall prepare and submit to BART for review a budget for construction of the Transportation Improvements (the "TI Budget") and evidence of the availability of Prop 1C Funds and Agency Funds sufficient to pay all budgeted costs.

4.05 Construction Bonds.

Developer shall cause the General Contractor to provide to BART evidence of the issuance of payment and performance bonds for one hundred percent (100%) of the cost of the Construction of the Transportation Improvements. Such bonds shall be in a form and provided by a bonding company meeting the criteria set forth in the HCD Funding Agreement and shall name BART as an additional payee under the bonds.

4.06 Construction Guarantee.

Prior to commencing work on the Transportation Improvements Developer shall provide a Completion Guarantee from the Completion Guarantor for completion of the Transportation Improvements. BART shall be a beneficiary of the Completion Guarantee and entitled to enforce all provisions thereof.

4.07 Construction Contract.

Developer shall use good faith and diligent efforts to enter into a construction contract with a reputable contractor approved by BART (which approval shall not be unreasonably withheld), providing for the contractor to be the General Contractor and to construct the Transportation Improvements for a guaranteed maximum price consistent with the TI Budget. Developer's construction contract(s) for Construction of the Transportation Improvements shall include the provisions required by Section V.

4.08 Insurance.

Developer shall procure and maintain, or cause its contractors to procure and maintain, insurance in connection with Construction of the Transportation Improvements with coverages and in the amounts specified in Section 5.02 below.

4.09 Commencement of Construction, Satisfaction of Conditions.

Once Developer has completed all the tasks and obtained all the documentation specified in Sections 4.01 through 4.08 above and all other requirements of this Agreement and the BFS to be performed prior to commencement of Construction, then Developer shall notify BART and request that BART issue to Developer a permit to enter (the "TI Permit to Enter") the portions of the Other BART Property specified in the TI Permit to Enter to construct the Transportation Improvements (the "TI Improvement Area"). If Developer has not satisfied the conditions to and requested BART's issuance of the TI Permit to Enter by not later than nine (9) months following commencement of Construction of the BART Garage, as such date may be extended pursuant to Sections 4.15 and 6.07 (or such later date to which BART and Developer may agree in writing), BART shall have the right to enforce the Completion Guarantee.

4.10 Access.

Within fourteen (14) days following Developer's request for the TI Permit to Enter as provided in Section 4.09 above, BART shall provide to Developer the TI Permit to Enter the portions of the Other BART Property specified therein for the purposes of Construction of the Transportation Improvements. The TI Permit to Enter shall generally be in the form attached as Exhibit H, as modified to reflect the impact Construction of the Transportation Improvements will have on BART's Transit Operations. At least sixty (60) days prior to the date that Developer expects to request the TI Permit to Enter from BART, Developer shall provide BART notice of the date Developer expects to make the request and the date Developer expects to begin Construction of the Transportation Improvements. Developer shall request a permit from Caltrans to work on portions of the Plaza and Frontage Road located within Caltrans' right-of-way.

4.11 Commencement and Completion of the Transportation Improvements.

Once BART has given the TI Permit to Enter pursuant to Section 4.09 above, Developer shall commence and complete Construction of the Transportation Improvements in accordance with the Transportation Improvement Plans and this Agreement within three (3) months following completion of Construction of the BART Garage, subject to extension permitted pursuant to Sections 4.15 and 6.07.

4.12 Developer's Obligations for Construction.

Developer shall do the following:

(a) Furnish all labor and materials and perform, in a good and workmanlike manner, all of the work for Construction of the Transportation Improvements in accordance with the approved Transportation Improvement Plans.

(b) Supervise and direct the Construction of the Transportation Improvements. Prior to commencing Construction work for the Transportation Improvements, Developer shall submit a construction management plan to BART for review and approval. Such plan shall detail how Developer will supervise and direct the Construction of the Transportation Improvements by the General Contractor and shall include an organization chart showing lines of communication and responsibility and a narrative describing the roles and responsibilities of key staff, including the Inspector of Record, responsible for quality control and safety for the Transportation Improvements. Such efforts by Developer will be overseen by the Site Representative, who shall follow the construction management process as stipulated in the Construction Procedures Manual.

(c) Assure that Site Representative is at the Construction site at all times during the construction of the Transportation Improvements. When the Site Representative is unavailable for more than a partial day (vacation, illness, etc.), a substitute acceptable to the BART Representative shall be present and act as the Site Representative. If the Site Representative is absent from a particular part of the work, the BART Representative may, if he or she deems it necessary after discussing by telephone with the Developer Representative, give orders to the General Contractor or any subcontractor to stop such work, and such orders shall be received and obeyed. The BART Representative shall confirm such orders in writing to the Site Representative.

(d) Assure that the BART Representative is given adequate notice of the times and days of Construction so that the BART Representative or her or his designee can be present on or in the vicinity of the Construction site during the construction of the Transportation Improvements.

(e) Resolve, in consultation with BART any questions involving the interpretation of any of the Transportation Improvement Plans.

(f) Implement and follow the approved TI Coordination Plan and approved SSWP.

(g) Maintain at the Construction site all documents relating to construction of the Transportation Improvements.

(h) Comply with all governmental and, to the extent applicable, BART regulations, including safety regulations, in constructing the Transportation Improvements. Upon the failure of Developer to comply with such regulations following written notice of violation and failure to cure such violation within seven (7) days or sooner if required to avert injury to persons or damage to property, the BART Representative shall have the authority to stop any or all operations of Developer affected by such failure until such failure is remedied. If the failure cannot reasonably be cured within such 7-day period, Developer shall be in compliance with this section if Developer commences the cure within such 7-day period and diligently proceeds to completion, so long as such delay in cure does not endanger persons or property. No part of the time lost due to any such stop orders shall constitute a Force Majeure event, unless such stop order was given in the absence of a violation or a failure to cure within

the time required. In no event shall time lost due to any such stop order be the subject of any request for monetary damages by Developer.

(i) Take all necessary steps to ensure that the prevailing wages provisions of the Labor Code Sections 1720 et seq. are fully met in connection with Construction of the Transportation Improvements.

(j) Prepare and include in all contracts, subcontracts and all applicable provisions as to prevailing wages and insurance coverages set forth in Section V.

(k) Prepare and include in all contracts, subcontracts and the applicable provisions of all fair employment opportunity provisions set forth in Section V.

(l) Keep adjoining real property not being used for the Construction free from accumulation of waste materials and rubbish caused by Construction.

(m) Be responsible for collecting, from time to time, all paper, cartons and other debris caused by the Construction.

(n) Assure that all materials furnished shall be new unless stated otherwise in the approved Transportation Improvement Plans, and, when materials are specified to conform to any standard, that the materials delivered to the Construction site bear the manufacturer's label setting forth the specifications of the materials.

(o) Cooperate with other forces and BART. Developer shall not have the sole right to occupy the Construction site during the performance of the work, and BART reserves the right to enter upon the Construction site for the purpose of making change that are necessary for the rearrangement of its facilities or for any other reason. Furthermore, BART reserves the right to perform other or additional work at or on the Construction site by the other forces. If Developer is hindered by the work of other forces, written notification shall be made in writing to the BART Representative, who shall take necessary steps to adjust the other work so as to minimize to the extent reasonably possible any interference with the Construction.

(p) Coordinate with BART for work to be performed by BART forces for the final tie-ins of BART systems for the Transportation Improvements. This obligation includes:

(i) Notifying BART at least three (3) months prior to the intended date that final tie-in of BART systems is required to enable work to be placed on the maintenance support schedule by BART.

(ii) Installing and testing systems-related wiring and equipment sixty (60) days prior to the date that final tie-in of BART systems is required to enable review and approval of installation and testing reports by BART.

(iii) Confirming thirty (30) days prior to the date that final tie-ins of BART systems is required to enable BART to schedule work.

(q) Conduct its operations so as to cause minimal obstruction and inconvenience to the public and have under Construction no greater length or amount of work than can be prosecuted properly with due regard to the rights of the public. If, in the opinion of the BART Representative, an employee of Developer or its General Contractor or subcontractor appears to be acting in a disorderly or reckless manner, or violating BART's safety or security policies, then Developer, if the BART Representative so requests, shall at its expense promptly cause such person to be removed and shall not again employ such person in connection with the Construction of the Transportation Improvements or any other Phase I Improvements.

(r) Inspect all materials, supplies and equipment that are used, consumed or incorporated in the Transportation Improvements. In addition, Developer shall conduct a continuous program satisfactory to the BART Representative of Construction quality control for all work performed for the Transportation Improvements. Prior to commencing Construction of the Transportation Improvements, Developer shall submit a quality control/quality assurance plan to BART for review and approval. The plan shall be prepared in accordance with the requirements of the BFS Standard Specification Section 01 45 00. Developer shall have primary responsibility for inspecting the work and materials, including the performance of all special inspections by qualified third party special inspectors as required by the BFS, applicable codes and the Final TI Plans and shall be responsible for ensuring that inspections required by other governmental authorities are performed. Inspections performed by the BART Representative, BART staff or agents are conducted to verify that Developer has performed its inspections properly. Any observation, verification, inspection or approval of work or materials by BART or the BART Representative shall not relieve Developer of any of Developer's obligations under this Agreement. If, in the opinion of the BART Representative, Developer fails to execute its responsibility for quality control and inspection on any part of the work after receiving written notice thereof and failing to cure any deficiencies in the quality control or inspection process identified in the notice within two (2) business days (unless such cure cannot, in the exercise of reasonable diligence, be completed within that period, in which event that period shall be extended for so long as it shall be reasonably required for the Developer to complete or cause to be completed such cure), BART may, at its option, conduct quality control and inspection activities in lieu of Developer at Developer's expense. Such expense shall be in addition to the reimbursement made to BART pursuant to Section 4.20. Such inspection shall not relieve Developer of its liability for defective or unsuitable work as described in Section 4.16.

(s) Have the charge and care of the work and the materials to be used therein, including materials for which Developer has received partial payment, materials in transit and stored materials, and bear responsibility for protecting the work and materials from loss or damage by the action of the elements or any other cause until the TI Certificate of Completion is issued or earlier relief under Section 4.17 is granted. Developer shall rebuild, repair or restore all injuries, losses, or damage to any portion of the work and materials occasioned by any cause prior to issuance of the TI Certificate of Completion, at no cost to BART unless caused by BART or other BART contractors.

4.13 Execution of Contracts, Subcontracts and Purchase Orders.

All contracts, subcontracts and purchase orders shall be executed in Developer's or the General Contractor's name and not as agent for BART, it being expressly understood and agreed

that all contractors, subcontractors and material persons shall at all times be deemed to be engaged by Developer or the General Contractor and not by BART. At BART's request, copies of all construction contracts, subcontracts and purchase orders shall be delivered to BART within a reasonable time following such request.

4.14 Payment for Construction Costs of Transportation Improvements. Developer shall be entitled to reimbursement from the TI Funds or Agency funds for costs incurred in connection with the Transportation Improvements in accordance with the TI Budget and pursuant to the terms of the HCD Funding Agreement and the Agency's agreements with Developer. BART shall have no responsibility for the payment of, or disbursement of any funds to pay, such costs.

4.15 Procedure for Making TI Change Orders.

(a) Developer shall inform BART of any minor field change. A minor field change from the approved Transportation Improvement Plans is a change that is not a substantial change, has no adverse effect on the matter for which BART approval is required pursuant to Section 4.03 above and is made to expedite the construction work in response to field conditions. With respect to the Transportation Improvements, changes in exterior design, lighting, signage, treatment, safety features, quality of building materials or colors shall be deemed not to be minor field changes. If Developer and BART do not agree that a proposed change is a minor field change, then such change shall not be treated as a minor field change and the parties shall proceed under Section 4.15(b) instead.

(b) Any change (other than a minor field change described in subsection (a)) in the approved Transportation Improvement Plans that would cause the aggregate TI Budget to be exceeded shall be effectuated through a TI Change Order as set forth in this section. In addition, any change (other than a minor field change described in subsection (a)) in the Transportation Improvement Plans that would affect access to and operation and maintenance of the Transit Facilities shall be effectuated through a TI Change Order.

(c) If Developer desires a TI Change Order, it shall submit to BART a description of the proposed change. Within ten (10) business days following the submittal, BART shall approve or disapprove the TI Change Order. Any disapproval shall state with particularity the grounds for such disapproval. If not approved by BART within that ten (10) business day period, the proposed TI Change Order shall be deemed disapproved. Any disapproval or deemed disapproval shall be subject to the dispute resolution procedures set forth in Section 6.04. If the TI Change Order is approved, Developer shall implement the TI Change Order, and, if applicable, the TI Budget shall be adjusted accordingly.

(d) If BART desires a TI Change Order, BART shall submit the proposed change to Developer. The proposed TI Change Order shall be signed by the Group Manager of Construction Management for Transit System Development. Within ten (10) business days following receipt, Developer shall prepare a TI Change Order for the proposed change and notify BART of the cost increase or decrease, if any, that would be required to implement the TI Change Order. Within seven (7) business days following receipt of the notice regarding the effect on the cost of Construction, BART shall notify Developer of BART's approval or

disapproval of the proposed TI Change Order, stating with particularity the reasons for any disapproval. If not approved by BART within seven (7) business days following the submittal by Developer of the proposed TI Change Order, the TI Change Order shall be deemed disapproved. If the TI Change Order is approved by BART, then Developer shall implement the TI Change Order and the amount of the net increase in the TI Budget resulting from the TI Change Order shall be deducted from the TI Contingency Fund. The amount of the net decrease resulting from a TI Change Order requested by BART or a net decrease pursuant to Section 4.15(c) shall be added to the TI Contingency Fund. If BART does not approve an increase in the TI Budget, BART may nevertheless notify Developer that BART elects to proceed with implementation of the TI Change Order on a cost plus basis in accordance with the provisions of Section 4.15(f) below. In the event BART so elects, Developer shall implement the TI Change Order in an efficient and prudent manner and shall submit to BART a cost proposal pursuant to Section 4.15(e) below based on actual labor, materials and equipment used in performance of the such changed work, which shall be subject to the approval of the BART Representative or designee, which approval shall not be unreasonably withheld provided Developer can demonstrate to the reasonable satisfaction of the BART Representative that the work was performed in an efficient and prudent manner. Developer may add to the costs referenced in Section 4.15(e) below a reasonable amount to cover Developer's construction management fee of five percent (5%), third-party fees and financing costs, Developer's general and administrative costs, including in-house legal, and the amount of the net increase in the TI Budget resulting from the TI Change Order shall be deducted from the TI Contingency Fund. In no event shall BART approve nor shall Developer be required to implement any BART-directed TI Change Order the cost of which exceeds the funds then available in the TI Contingency Fund. Any costs in excess of amounts in the TI Contingency Fund shall be paid by BART.

(e) The cost breakdown of the cost proposal for changes shall have separate estimates for the direct costs of added work and deleted work for the following categories: labor, materials, equipment rental, subcontract work and other costs. Detailed cost breakdowns as described above shall be submitted for any subcontractor performing work under the TI Change Order. The cost proposal shall include any compensation or time extension due to the changes in accordance with the provisions of Section 4.15(g) below. If the estimated cost of any such added work is greater that the estimated cost of the deleted work in the same category, the cost proposals shall be the sum of the agreed cost difference plus the applicable allowable percentages for such category of work pursuant to Section 4.15(f) below applied to the estimated cost difference. If the estimated cost of any such deleted category of work is greater than the estimated cost of the added work in the same category, the estimated cost difference shall be multiplied by one hundred five percent (105%). The cost breakdown shall not exceed the limitations on compensation specified in the cost-plus provisions of Section 4.15(f) below.

(f) When the cost of any TI Change Order is to be determined pursuant to this Section 4.15(f), the determination of the costs shall be made pursuant to the provisions of Article 7 and Article 8 of AIA Document A111-1997, Standard Form of Agreement Between Owner and Contractor, and of Section 7.3.6 of AIA Document A201-1997, General Conditions for the Contract of Construction and the following: the following maximum allowable percentages may be added to costs of labor, materials, equipment rental, subcontract work and design work as described below: Labor and burden – 22%; Materials – 15%; Equipment Rentals – 15%; Subcontract Work – 5%; and Design Work – 5%. These percentages shall cover field office

overhead, home office overhead and profit, including but not limited to estimating, clerical support, trailer rental, waste disposal, postage, telephone and utilities. A maximum of two (2) 5% markups for subcontract work will be granted regardless of the tier of subcontractor that performs the work. The following modifications to the referenced AIA Documents shall apply:

(i) Costs for field office personnel as described in AIA 201-1997 Section 7.3.6.5 and AIA A111-1997 Sections 7.2.2 and 7.2.3 shall be deemed compensated for by the maximum allowable percentage markups in this Section 4.15(f). Supervision shall include all classifications of labor above and including foreworkers who are on site only supervise the TI Change Order work and are not engaged in the actual and direct performance of the work.

(ii) Subcontract costs as described in AIA A111-1997 Section 7.3.1 shall be required to follow the requirements of this Section 4.15(f) regardless of the tier of the subcontractor that performs the work.

(iii) Costs for field office overhead as described in AIA A111-1997 Section 7.5.4 shall be deemed compensated for by the maximum allowable percentage markups in this Section 4.15(f).

(iv) Costs for insurance, bonding and subguard shall be added to the cost breakdown.

(g) The following provisions shall apply to delays to completion time and any costs related to such delays by reason of changes made by BART:

(i) To the extent that Developer proves that (A) Developer has been delayed in the completion of critical path operations for the Transportation Improvements Construction by reason of changes made by BART under Section 4.15(d), and (B) BART is responsible and Developer is not concurrently responsible for such delay or other concurrent Developer-controlled delay to critical path operations, then an extension of time commensurate with the delay thus caused will be granted to the times of completion under this Agreement.

(ii) To the extent that Developer has proved (A) and (B) in subsection (i) above, and also proves that: (A) Developer has or will suffer actual losses as a result of the delay; (B) but for the BART change, Developer could not have suffered such actual losses; (C) Developer could not have mitigated such actual losses despite taking precautionary and remedial actions; and (D) the delay was not within the contemplation of this Agreement, then Developer shall be entitled to additional compensation as part of the TI Change Order cost proposal as computed in (iii) below, which compensation shall be deducted from the TI Contingency Fund, as shall any additional BART Costs attributable to the BART-requested change. Unless Developer satisfies the provisions of this subsection (ii), Developer's sole remedy for such delay shall be an extension of time under subsection (i) above.

(iii) Delay costs incurred by Developer shall be understood to include only the reasonable, adequately supported costs incurred for idle time of equipment, necessary payment overhead for idle time of workers, cost of extra moving of equipment and indirect costs

for jobsite overhead, but excluding home office overhead. Calculation of costs shall be in accordance with Section 4.15(f).

4.16 Inspections and Warranties.

(a) BART shall at all times have access to and the right to observe the Construction of the Transportation Improvements and all facilities where the Construction or any part thereof is being fabricated or stored, and Developer shall provide proper facilities for such access and observation. All contracts with the General Contractor or subcontracts relating to the Construction shall provide such access. The Construction may require inspections and approvals by Caltrans to determine compliance with its requirements. Developer, in consultation with BART, shall cause such inspections or approvals to be performed. No inspection performed or failed to be performed by BART shall be a waiver of any of Developer's obligations to perform the construction in accordance with all governmental requirements (including those of Caltrans), the BFS, Approved BFS Variances or the provisions of the approved Transportation Improvement Plans.

(b) In the event that any testing or inspection reveals a failure of the Construction, or a portion thereof, to comply with the BFS requirements, Approved BFS Variances or the approved Transportation Improvement Plans, or the governmental requirements, BART may request inspection or testing of any or all of the other similar parts of the Construction of the Transportation Improvements and any other element of the Transportation Improvements affecting access to and operation and maintenance of the Transit Facilities. If such additional inspection or testing reveals a failure of other similar parts of the Construction, the expense of the additional inspection or testing shall be paid out of the available Prop 1C Funds or Agency funds or borne by Developer or its General Contractor. If such additional inspection or testing does not reveal a failure of the other similar parts of the Construction, the expense of the additional inspection or testing shall be borne by BART. If an inspection or testing reveals a failure of the Construction or a portion thereof to comply with the requirements of the approved Transportation Improvement Plans, or the governmental requirements, Developer shall take such steps as are necessary to cause such compliance including, if necessary, removal and replacement of any non-conforming portions of the Construction. Prior to the General Contractor correcting the defect revealed by the inspection or test, Developer shall cause the General Contractor to submit to BART the General Contractor's proposed method for correcting such defect. BART shall reasonably approve or disapprove the General Contractor's plan within fifteen (15) days of receipt by BART, which approval shall not be unreasonably withheld. In its review of the General Contractor's proposal, BART shall apply the standard used by the construction industry as a reasonably acceptable methods correcting defects of the type specified by BART. If the General Contractor's proposal is not approved or disapproved by BART within fifteen (15) days of receipt by BART, the General Contractor's proposal shall be deemed disapproved. In such an event, the General Contractor may resubmit the proposal to BART for its consideration. BART shall reasonably approve or disapprove the General Contractor's resubmitted plan within ten (10) days of receipt by BART, which approval shall not be unreasonably withheld. If the General Contractor's resubmitted proposal is not approved or disapproved by BART within ten (10) days of receipt by BART, the resubmitted proposal shall be deemed disapproved. Any disputes regarding the disapproval of the General Contractor's proposal shall be resolved in accordance with Section 6.04 below.

(c) If BART determines at any time prior to the expiration of the applicable warranty period, as set forth below in this subsection (c), that there are defects in any part of the Construction of the Transportation Improvements or any other element of the Transportation Improvements affecting access to and operation and maintenance of the Transit Facilities, BART shall notify Developer in writing, and Developer shall cause the General Contractor to correct or cause the defect or failure to be corrected within thirty-five (35) days after Developer's receipt of such written request to Developer (unless such correction cannot, in the exercise of reasonable diligence, be completed within that period, in which event that period shall be extended for so long as it shall be reasonably required for the General Contractor to complete or cause to be completed such corrections). Prior to the General Contractor correcting the defect specified by BART in the preceding sentence, Developer shall cause the General Contractor to submit to BART the General Contractor's proposed method for correcting such defect. BART shall reasonably approve or disapprove the General Contractor's plan within fifteen (15) days of receipt by BART, which approval shall not be unreasonably withheld. In its review of the General Contractor's proposal, BART shall apply the standard used by the construction industry as a reasonably acceptable methods correcting defects of the type specified by BART. If the General Contractor's proposal is not approved or disapproved by BART within fifteen (15) days of receipt by BART, the General Contractor's proposal shall be deemed disapproved. In such an event, the General Contractor may resubmit the proposal to BART for its consideration. BART shall reasonably approve or disapprove the General Contractor's resubmitted plan within ten (10) days of receipt by BART, which approval shall not be unreasonably withheld. If the General Contractor's resubmitted proposal is not approved or disapproved by BART within ten (10) days of receipt by BART, the resubmitted proposal shall be deemed disapproved. Any disputes regarding the disapproval of the General Contractor's proposal shall be resolved in accordance with Section 6.04 below. Notwithstanding the foregoing, in the event the defect or failure results in an emergency condition causing a threat to health and safety in connection with the Transit Facilities, Developer may be required to correct the defect or failure in a shorter period of time determined by BART, or, if Developer is unwilling or unable to correct the defect or failure in the time determined by BART, BART may correct the defect or failure, in which case, Developer or its General Contractor shall reimburse BART for the costs of correcting the defect or failure promptly following receipt form BART of a detailed invoice for the work. Unless a longer warranty period is obtained from any subcontractor or supplier with respect to the part of the Construction performed, the applicable warranty period shall mean the later of: (i) at least one (1) year from the date of substantial completion of the applicable portion of the Transportation Improvements; or (ii) if corrective work is required at least six months after the corrective work is completed. Developer shall make good faith and diligent efforts to obtain warranties from the General Contractor, subcontractors and suppliers in accordance with the specifications included in the Transportation Improvement Plans. All warranties shall be assignable by the General Contractor or Developer to BART.

4.17 Transportation Improvements Completion

When Developer has made a good faith and diligent determination that the Transportation Improvements have been substantially completed in accordance with the approved Transportation Improvement Plans, except for minor work items the completion of which will not impact BART patrons, Developer shall so notify BART and request a preliminary final inspection to determine the state of completion of the work. The request shall include a list of

the incomplete work items. The request shall be in writing and received by the BART at least seven (7) days in advance of the requested date of the preliminary inspection. Within three (3) days of the date requested by Developer, BART shall perform the preliminary inspection of the Transportation Improvements. Developer shall be represented by the Site Representative, the General Contractor's principal superintendent and such subcontractors and suppliers as may be necessary to answer the questions for the BART inspection team. BART shall complete its inspection and from the information gathered prepare a punch list of work to be performed, corrected or completed. When all requirements of the above-prepared punch list have been completed, Developer shall request the final inspection to determine eligibility for issuance of the TI Certificate of Completion. If the final inspection determines that the work has been substantially completed in accordance with the BFS and the approved Transportation Improvement Plans, and only minor corrective measures are required, the corrective work of which will not impact BART patrons, BART will issue a TI Certificate of Completion, based upon Developer's assurance that remaining corrective measures will be completed within the shortest practical time period.

4.18 Condition of Frontage Road Property.

(a) Developer agrees that BART is making the Frontage Road Property available for construction of the Transportation Improvements in an "as is" condition and that Developer is solely responsible for demolition, site preparation, and correction of any soils, subsurface or structural conditions on the Frontage Road Property (including but not limited to removal, remediation or mitigation of Hazardous Materials) but only to the extent necessary to construct the Transportation Improvements and for otherwise putting the Frontage Road Property in a condition suitable for construction of the Transportation Improvements. Developer represents that it has inspected the Frontage Road Property and all data relating thereto, including, without limitation, soils test reports and data, locations and conditions of adjacent structures and utilities, and governmental requirements that may affect Developer's activities in constructing the Transportation Improvements, and has satisfied itself as to the conditions thereof. In addition, Developer represents that it has verified the accuracy of any documents provided to Developer by BART and that BART is not responsible for, and makes no representatives or warranties as to, the accuracy of any such documents. After having evaluated all foreseen and foreseeable risks, hazards and difficulties in connection with the construction, Developer further guarantees that, except as provided in Section 4.20 above or otherwise expressly provided in this Agreement, the construction of the Transportation Improvements shall be performed by at no cost to BART. BART makes no warranty or representation as to the condition of the Frontage Road Property or its fitness for construction of the improvements contemplated to be constructed thereon under this Agreement.

(b) Remedial Hazardous Materials at the Frontage Road Property that are not of an unusual nature and do not differ materially from those ordinarily encountered and generally recognized as inherent in work of the character provided for in this Agreement regarding the Transportation Improvements shall be considered a foreseeable risk. Specifically, contaminated soil and aggregate fill materials found beneath asphalt concrete paved surfaces are a foreseeable risk.

4.19 As Built Drawings, Record Drawings, and Operations and Maintenance Manuals

Upon substantial completion of Construction of the Transportation Improvements, Developer shall provide to BART one (1) full-size set of contract documents marked up to accurately represent the as-built condition of the Transportation Improvements and other improvements and facilities on the Other BART Property and six (6) sets of operations and maintenance manuals for those parts of the Transportation Improvements for which such manuals were required in the approved Final TI Plans. Copies of as-built markups shall be submitted to the BART Representative monthly for review and comment. Within six (6) months after the issuance of the TI Certificate of Completion, Developer shall provide to BART CAD record drawings that accurately represent the as-built condition of the Transportation Improvement for all design disciplines and for elevator, fire alarm, fire sprinkler and system shop drawings where detailed design is not shown on the Final TI Plans. Drawings submitted shall be in compliance with BART's contract drawing preparation requirements and manuals submitted in compliance with BART's specification for operations and maintenance manuals. Operations and maintenance manuals shall be submitted and approved by BART prior to issuance of the TI Certificate of Completion. BART shall approve or provide an itemization of deficiencies in a writing delivered to developer within thirty (30) days following submission to BART. BART's failure to respond within such thirty (30) day period shall constitute a disapproval. Any disapproval or deemed disapproval shall be subject to the dispute resolution procedures set forth in Section 6.04. For any equipment for which BART has not approved the operations and maintenance manuals, BART may permit Developer, at no additional cost to BART, to provide BART with written maintenance agreements from the manufacturer or an acceptable third party to perform all required maintenance and respond to all trouble calls (24-hours-a-day/7-days-a-week) until such time as such manuals are approved by BART. When BART permits Developer to provide written maintenance agreements pending approval of operations and maintenance manuals, the issuance of the TI Certificate of Completion may not be withheld for any unapproved operations and maintenance manuals for which BART has received acceptable written maintenance agreements. All documents provided pursuant to this section shall be written in the English language and shall become the property of BART.

4.20 Payment of BART Costs.

BART shall be entitled to reimbursement from the TI Funds for BART's reasonable out-of-pocket costs (including, without limitation, outside legal fees and expenses and fees of experts) and allocated BART staff costs for review of the Transportation Improvement Plans, oversight and inspections for the Construction of the Transportation Improvements, review of any changes to the approved Transportation Improvement Plans and BART staff costs for maintenance support during Construction and modification and tie-ins of new systems (fire alarm, telephone, public address, SCADA, CCTV, etc.) to existing BART systems based on the BART TI Cost Budget attached hereto as Exhibit L (the "BART TI Cost Budget"). BART's request for reimbursement shall be made in accordance with the BART TI Cost Budget, shall be in writing and shall include reasonable detail regarding the costs for which reimbursement is requested. Developer shall include in its next requisition to the Agency following receipt of BART's request for reimbursement and shall reimburse BART for such costs within ten (10) days following receipt of the Agency's disbursement for such requisition. Developer's obligation to reimburse BART shall be subject to the Agency's timely funding from Prop 1C

Funds or Agency funds of the amounts requested in the requisition submitted to Developer. In no event shall BART be entitled to reimbursement of BART Costs in excess of the BART TI Contingency Fund, including any amounts reallocated to the BART TI Cost Budget or the TI Contingency Fund pursuant to Section 5.08 below. The BART TI Cost Budget assumes that the cost of Construction of the Transportation Improvements will not exceed the sum of Two Million Three Hundred Eighteen Thousand Eight Hundred Seventy-Five Dollars ($2,318,875) and that the Transportation Improvements will be constructed over a nine (9) month period. If the scope of Construction is expanded or the time over which the Transportation Improvements will be constructed is extended resulting in BART's expectation that its costs for the tasks for which BART is to receive reimbursement pursuant to this section will exceed the BART TI Cost Budget plus funds then available in the TI Contingency Fund, then BART shall document the increased costs for a revised BART TI Cost Budget, which shall include the increased costs not covered by the TI Contingency Fund, and submit to Developer for Developer's approval. Any dispute concerning the appropriate increase in the BART TI Cost Budget shall be resolved in accordance with Section 6.04.

4.21 Standards for Transportation Improvements Construction.

(a) The intent of the BFS is to provide guidance and minimum standards for BART's facilities and practices for safeguarding patrons, the general public, and employees, as well as safeguarding property and on-going operations. The BFS regulates and controls the design, construction, quality of materials, use and occupancy, and location, equipment and installation of facilities within the jurisdiction of BART. Where the BFS provides guidance and minimum standards in general terms, but not in complete detail, industry standards design and construction practice and materials and workmanship for similar public roadways shall be used.

(b) In the event that a disagreement arises among the parties as to whether an element of the Transportation Improvements has been properly constructed in accordance with the terms of this Agreement, the following order of precedence of documents shall govern: first, this Agreement; then, approved BFS Variances, then the BFS, then approved Final TI Plans – specifications (construction specifications), then approved Final TI Plans – drawings (construction drawings) and finally all other agreements.

(i) Utility standards published by municipalities or utility companies and referenced in the BFS shall apply only to materials and workmanship with respect to work that upon completion is to be accepted by a municipality or a utility company. For this limited purpose, these referenced utility standards shall govern over the BFS.

(ii) In case of conflict between the BFS and design and/or construction industry standards referenced in the BFS, such as standard specifications, codes, practices, and the requirements for materials, equipment, work quality, installation, inspections, and tests, that are published and issued by organizations, societies, and associations, the BFS shall govern. Unless otherwise specified, such referenced standards shall apply only to materials, workmanship, and procedure. Commercial terms and legal responsibilities are not intended to be included in the reference. All material, equipment, and workmanship, specified by the number, symbol, or title of such referenced standards shall comply with the latest edition or revision

thereof and all amendments and supplements thereto in effect at time for Final TI Plan approval, except where a particular edition or revision thereof is indicated in the reference.

(c) In the case of differences between small and large scale drawings, the large scale drawings shall govern. Schedules on drawings shall take precedence over conflicting notations on drawings. In the event of discrepancy between any drawing and the figures written thereon, the figures, unless otherwise indicated, shall govern over scaled dimension. In the event of a conflict between codes, regulation, standards or the BFS, the most stringent requirement shall take precedence unless specifically required by BART.

(d) Where BART is the authority having jurisdiction for enforcement of the California Building Standards Code as authorized under California laws, BART shall have the power to render interpretations of the code. Such interpretations shall be in conformance with the intent and purpose of the code. Interpretations made by the Chief Engineer of BART shall be final and not subject to dispute.

(e) Where BART is not the authority having jurisdiction, BART shall have the power to adopt and enforce additional requirements as specified in the BFS that do not conflict with applicable codes or the interpretation thereof by the authority having jurisdiction.

SECTION V.
PROVISIONS APPLICABLE TO ALL CONSTRUCTION

5.01 Prevailing Wages.

Developer shall and shall require the General Contractor and all contractors, subcontractors and materialpersons to pay prevailing wages in the Construction of the Phase I Improvements, as those wages are determined pursuant to Labor Code Sections 1720 et seq. and implementing regulations of the Department of Industrial Relations and comply with the other applicable provisions of Labor Code Sections 1720 et seq. and implementing regulations of the Department of Industrial Relations, including but not limited to requirements for employment of apprentices and retention and production of wage records. Developer shall, and shall cause the General Contractor and all contractors and subcontractors to, keep and retain such records as are necessary to determine if such prevailing wages have been paid as required pursuant to Labor Code Sections 1720 et seq. During the Construction of the Phase I Improvements, Developer shall, or shall cause the General Contractor and all contractors to, post at the Construction site the applicable prevailing rates of per diem wages. Developer shall indemnify, hold harmless and defend (with counsel reasonably acceptable to BART) BART against any claim for damages, compensation, fines, penalties or other amounts arising out of the failure or alleged failure of any person or entity (including Developer, its General Contractor, contractors and subcontractors) to pay prevailing wages as determined pursuant to Labor Code Sections 1720 et seq. and implementing regulation or to comply with the other applicable provisions of Labor Code Sections 1720 et seq. and implementing regulations of the Department of Industrial Relations in connection with any Construction. Developer's obligation to indemnify under this Section 5.01 shall be interpreted broadly to apply to any legal or administrative proceeding, arbitration, or enforcement action.

5.02 Insurance. On or before execution of this Agreement and at all times during the term of this Agreement, Developer and its contractors and consultants, at their sole cost and expense, shall maintain the following insurance coverages, each naming BART and any other entity as required by this Agreement, as an additional insured:

(a) Evidence Required. At or before execution of this Agreement and at such times as BART may request, Developer and its contractors and consultants shall provide BART with certificates of insurance executed by an authorized representative of the insurers(s) evidencing that the insurance complies with this Section 5.02; provided, however, only certificates of insurance for the general liability and professional liability certificates will be required for execution of this Agreement. All other required insurance coverage will be provided upon issuance of a Permit to Enter. The certificates shall reference this Agreement and any subsequent access permit numbers assigned for work associated with this Agreement. Copies of all endorsements shall be attached to and form part of the certificates of insurance.

(b) Notice of Cancellation, Renewal, Reduction or Material Change in Coverage. All policies shall be endorsed to provide BART with not less than thirty (30) days notice of cancellation, reduction or material change in coverage. If the carrier cannot provide such notice, BART will accept notice from the insured on behalf of its carrier(s). Notice shall be sent to Department Manager of Insurance, San Francisco Bay Area Rapid Transit District, P.O. Box 12688. Oakland, CA 94604-2688. Developer shall annually submit to BART's Department Manager, Insurance, certifications confirming that the insurance required has been renewed and continues in place.

(c) Qualifying Insurers. All policies required by this Section 5.02 shall be issued by companies that hold a current policy holder alphabetic and financial sized category of not less than A-XII according to Best's Insurance Reports.

(d) Insurance Required.

(i) Commercial general liability insurance for bodily injury (including death) and property damage that provides limits of not less than Ten Million Dollars ($10,000,000) per occurrence and Ten Million Dollars ($10,000,000) annual aggregate as applicable.

A. Coverage shall include:

1. Premises and operations and mobile equipment;

2. Products/completed operations;

3. Broad form property damage (including completed operations);

4. Blanket contractual liability coverage;

5. Personal injury liability;

6. Cross liability and severability of interests clauses providing that the insurance applies separately to each insured except with respect to the limits of liability;

7. Independent Contractor's Liability; and

8. Explosion, collapse and underground hazards.

B. Such insurance shall include the following endorsements, copies of which shall be provided to BART:

1. Inclusion of BART, its directors, officers, representatives, agents and employees and any other entity, as required by this Agreement, and their respective directors, officers, trustees, representatives, agents and employees as additional insureds as respects work or operations performed under this Agreement; and

2. Stipulation that the insurance is primary insurance and that no insurance or self insurance of BART will be called upon to contribute to a loss.

C. For all permits and agreements involving construction or demolition work within 50 feet, vertically or horizontally, of the BART trackway and affecting any railroad bridge or trestle, tracks, road-beds, tunnel, underpass or crossing, the General Liability Insurance must not exclude coverage therein. In cases where this coverage is excluded from the policy, the following policy coverage is required:

1. Railroad Protective Liability for bodily injury (including death), property damage, and physical damage, including loss of use thereof, to railroad property with limits of not less than Two Million Dollars ($2,000,000) per occurrence and Six Million Dollars ($6,000,000) in the aggregate annually applicable to all operations of Developer and its contractor(s) and subcontractors within fifty (50) feet vertically or horizontally of BART's trackway. BART shall have the right to approve of the policy wording. The named insured shall be San Francisco Bay Area Rapid Transit District. Prior to commencing work or entering BART property, Developer shall file the original copy of the policy with BART's Department Manager, Insurance. This coverage shall be maintained for the term of all permits and agreements involving construction or demolition work within 50 feet, vertically or horizontally, of the BART trackway.

(ii) Automobile. Automobile liability insurance for bodily injury (including death) and property damage that provides a coverage limit of at least One Million Dollars ($1,000,000) combined single limit per occurrence applicable to all owned, non-owned, and hired vehicles.

A. With respect to the removal and transport of hazardous material or hazard-containing material, the policy shall include:

1. Coverage for the accidental release of hazardous waste defined in California Heath and Safety Code (H & S) Section 25117 and listed in Title 22

California Code of Regulations Section 66260.10 and consequential containment, cleanup, disposal and penalties associated therewith.

2. Pollution Liability - Broadened coverage for covered autos which includes "covered pollution costs or expenses," which mean any cost or expense arising out of:

(x) any request, demand or order; or

(y) any claim or suit by or on behalf of a governmental authority demanding that the insured or others test for, monitor, clean-up, remove, contain, treat, detoxify, or neutralize, or in any way respond to, or assess the effects of pollutants.

(iii) Statutory Workers' Compensation Insurance and Employers' Liability for not less than One Million Dollars ($1,000,000) per occurrence applicable to Employer's Liability coverage for all employees engaged in services or operations under this Agreement. The policy shall include broad form all-states/other states coverage. Coverage shall be specifically endorsed to include the insurer's waiver of subrogation in favor of BART, its directors, officers, representative, agents and employees and any other entity, as required by Agreement, and their respective directors, officers, trustees, representatives, agents and employees, a copy of which shall be provided to BART. Should any such work be subcontracted, Developer shall require each subcontractor of any tier similarly to comply with this Section 5.02, all in strict compliance with federal and state laws.

(iv) Contractors Pollution Liability Insurance. Contractor Pollution Liability Insurance (CPL) for bodily injury (including death), property damage and remediation that provides limits of not less than Three Million Dollars ($3,000,000) per occurrence if Developer or any of its contractors or subcontractors perform asbestos or other toxic or hazardous materials remediation, removal, abatement, storage, transportation or disposal work including, without limitation, related demolition work.

A. Such policies shall be for a term not less than one (1) year on an "occurrence" basis, and any aggregate applicable to such policies shall be dedicated to work performed by Developer and/or its contractor and subcontractors on behalf of BART. In addition, such policies shall include, without limitation, and as applicable:

1. Bodily injury and defense coverage for asbestos (if there is exposure);

2. Bodily injury and defense coverage for lead (if there is exposure);

3. Bodily injury and defense coverage for microbial matter (if there is exposure);

4. Property damage, to include natural resource damage claims;

5. a statement that such insurance is primary and over any surety contracts or bonds covering the Work if any;

6. coverage for products brought onto the BART Garage Parcel, Plaza and/or TI Improvement Area where operations are being performed;

7. Inclusion of BART and its directors, officers, representatives, agents, and employees as additional insureds as respects work or operations performed under this Agreement;

8. Coverage for pollution incidents related to transported cargo/waste to and from job site [See section 5.02(d)(ii)(A)(2)];

9. Coverage for claims for bodily injury, property damage or remediation costs related to pollution conditions at disposal sites that have received waste transported from the BART Garage Parcel, Plaza and/or TI Improvement Area; and

10. A waiver of subrogation provision against BART and its directors, officers, representatives, agents and employees.

(v) Builders Risk (Course of Construction) Insurance. Builders Risk (Course of Construction) Insurance provided on a Causes of Loss –Special Form policy, excluding earthquake, for the full replacement cost of materials, supplies, all property to be incorporated into the finished work, and completed work in an amount not less than the full completed value of the covered structure or the replacement value of alterations or additions. BART shall be named as a loss payee, and losses will be payable to both Developer and BART, as their interests may appear.

(vi) Professional Liability. Professional Liability Insurance for damages arising out of consultants' acts, errors or omissions. The policy shall provide a coverage limit of not less than One Million Dollars ($1,000,000) per claim/aggregate as respects consultant's services under this Agreement. Such insurance shall be maintained for a period of not less than two (2) years following completion of services.

(vii) Garage Keepers Legal Liability Insurance. Garage keepers legal liability insurance (garage keepers coverage), comprehensive and collision causes of loss, with limits not less than Three Million Dollars ($3,000,000) each occurrence for all permits and agreements involving assisted and/or valet parking services on BART property and for the duration of such services.

(e) Special Provisions.

(i) The foregoing requirements as to the types and limits of insurance coverage to be maintained by Developer, and any approval of said insurance by BART or its insurance consultants, are not intended to and shall not in any manner limit or qualify the liabilities and obligations otherwise assumed by Developer pursuant to this Agreement, including but not limited to the provisions concerning indemnification.

(ii) BART acknowledges that some insurance requirements contained in this Section 5.02 may be fulfilled by a funded self-insurance program of Developer. However, this shall not in any way limit liabilities assumed by Developer under this Agreement. Any self-insurance program must be approved in writing by BART in advance.

(iii) Should any of the work under this Agreement be subcontracted, Developer may impose these requirements upon each of its subcontractors/subconsultants of any tier at its own discretion. If subcontractor/subconsultant coverage is provided on Developer's behalf as primary coverage, this provision shall not apply.

(iv) BART reserves the right to terminate this Agreement in the event of material noncompliance with the insurance requirements of this Section 5.02.

(v) The required policy limits required under this Agreement may be satisfied by a combination of primary and excess policies.

(f) Waiver of Subrogation. To the extent permitted by law and without affecting the coverage provided by insurance required to be maintained hereunder, Developer and BART each waive any right to recover against the other (i) damages for injury or death of persons, (ii) damage to property, (iii) damage to the Phase I Improvements or any part thereof, or (iv) claims arising by reason of any of the foregoing, to the amount and extent that such damages and/or claims are covered (and only to the extent of such coverage) by insurance actually carried by either Developer or its Contractors or by BART. This provision is intended to restrict each party (as permitted by law) to recovery against insurance carriers to the extent of such coverage, and waive fully, and for the benefit of each, any rights and/or claims that might give rise to a right of subrogation in any insurance carrier.

5.03 Fair Employment Opportunity.

Developer and its contractors, subcontractors and materialpersons, including the General Contractor, and their successors and assigns shall not discriminate against any employee or applicant for employment in connection with the construction of the Phase I Improvements because of race, color, religion, ethnic group identification, sex, sexual preference, marital status, ancestry or national origin. Each of the following activities shall be conducted in a non-discriminatory manner: hiring; upgrading; demotion and transfers; recruitment and recruitment advertising; layoff and termination; rate of pay and other forms of compensation; and selection for training including apprenticeship.

5.04 Liens and Claims.

(a) Developer shall use its best efforts to not permit any mechanic's, laborer's or materialperson's lien, stop notice or any security interest at any time to be filed against all or part of the Station, the Other BART Property, the BART Garage Parcel, the Plaza, the Phase I Improvements or any other property owned by BART or any improvements thereon or interest therein, or any lien of any nature to be filed or permitted to be filed against the assets of or funds appropriated to BART or the Agency (including the Prop 1C Funds and the Grant Funds) arising out of any Construction by Developer. If such lien notice or interest is filed, Developer shall promptly discharge it. If not promptly discharged, BART thereafter shall have the right to

withhold and/or instruct Agency to withhold from the amount due under this Agreement an amount reasonably deemed by BART as sufficient to indemnify BART fully for any costs or expenses that may have been incurred in connection with the removal of such lien or security interest.

(b) Developer agrees that if the General Contractor, any of its contractors, subcontractors or suppliers performing work or anyone claiming directly or indirectly under or through Developer or the General Contractor or any such contractor, subcontractor or supplier shall suffer, permit, file or cause to be filed any mechanic's or other lien, stop notice or security interest against the Station, the Other BART Property, the BART Garage Parcel, the Plaza or any other property owned by BART or the Phase I Improvements or any other improvements thereon or any portion thereof, or against any assets of or funds appropriated to BART or the Agency (including the Prop 1C Funds and the Grant Funds), within thirty (30) days after notice of filing thereof, Developer shall cause such lien, notice, or security interest to be discharged of record by payment, deposit, bond, order of court of competent jurisdiction or otherwise. If Developer shall fail to cause such lien, notice, or security interest to be discharged of record within the period aforesaid, and if such lien, notice or security interest shall continue for an additional ten (10) business days after notice by BART to Developer, then, in addition to any other right or remedy, BART may, but shall not be obligated to, discharge the same either by paying the amount claimed to be due or by procuring the discharge of record of such lien, notice, or security interest. Any amount so paid, including all reasonable costs and expenses incurred in connection therewith, together with interest at the Default Interest Rate from the date BART makes the payment or incurs the reasonable costs and expenses, shall at BART's option be deducted from any amounts owed by BART to Developer pursuant to this Agreement or be payable by Developer to BART on demand. Notwithstanding the foregoing, Developer shall not be required to discharge of record any such lien or security interest if Developer is in good faith contesting the same and has furnished a cash deposit, an irrevocable letter of credit, a security bond or such other security as may be reasonably satisfactory to BART.

5.05 Compliance with Laws.

Developer shall cause the design and construction of the Phase I Improvements to be carried out in accordance with all applicable local, state, and federal laws and regulations, including performing all necessary environmental reviews, mitigations, monitoring and compliance. If the Construction of the Phase I Improvements is being carried out in violation of an applicable local, state, and federal law or regulation, BART shall have the right to require Developer to stop work on the portion of the Construction affected by such violation until the violation is corrected.

5.06 No Impairment of Operation of Transit Facilities.

Developer shall undertake all Construction so as not to threaten, endanger, interrupt, impair or unreasonably inconvenience in any way whatsoever at any time whatsoever and for any period of time whatsoever the safe and efficient operation of the Transit Facilities, recognizing that in the case of the Plaza Improvements and the Transportation Improvements the Construction will be conducted in areas used by BART patrons and that some level of inconvenience or interference with normal paths of travel in the Plaza, roadway and parking

areas will occur. Developer hereby assumes full responsibility for insuring that the General Contractor and all contractors, subcontractors, agents and licensees involved in the Construction of the Phase I Improvements comply fully and completely with the requirements of this Section 5.06. All management contracts, service contracts, maintenance contracts, licenses, concession contracts and other similar agreements entered into by Developer with respect to the Phase I Improvements shall contain an express covenant that the General Contractor, contractor, subcontractor, manager, licensee, concessionaire or other contractor of the Project shall refrain from any activity that would endanger the safety of BART's patrons, endanger the safe and efficient operation of the Transit Facilities or cause an interruption in BART's operation thereof. No such express covenant shall release Developer from its full responsibility and liability under this Agreement. The Construction of the BART Garage shall be carried out in accordance with the approved BART Garage Coordination Plan, and the Construction of the Plaza Improvements shall be carried out in accordance with the approved PI Coordination Plan. Developer's obligations under this Section 5.06 shall not be construed to be for the benefit of or enforceable by any party other than BART.

5.07 Conditions Endangering Transit Facilities.

In the event that any condition arises on or in any portion of the Station (including the Plaza) during Construction of the Plaza Improvements or on the BART Garage Parcel during Construction of the BART Garage, which condition BART determines in BART's sole and absolute discretion to be an emergency condition or an immediate threat to the safety of the patrons of the Transit Facilities, BART shall have the right, which right shall be cumulative with all other rights BART may have, to enter the Plaza, the BART Garage Parcel or the TI Improvement Area and take action to remedy such threatening or dangerous condition. In such event, Developer shall reimburse BART within thirty (30) days of receipt of written demand for reimbursement, for any and all costs and expenses incurred by BART in connection with such remedial activities.

5.08 Reallocation of Contingency Funds.

To provide additional sources of funds for BART Costs and/or change orders initiated by BART for various elements of the Phase I Improvements, BART shall have the right to reallocate funds: (a) among the Garage Contingency Fund and the TI Contingency Fund; (b) among the BART Cost Budget and the BART TI Cost Budget; (c) among (i) any of the Garage Contingency Fund and the TI Contingency Fund and (ii) any of the BART Cost Budget, and the BART TI Cost Budget; and (d) to add to the Garage Contingency Fund amounts originally budgeted for the Access Strategies Program and any amounts in the PI Contingency Fund which are not utilized to complete the Plaza Improvements, provided that, in the latter case, the PI Maximum Cost shall be reduced by the amount of PI Contingency Funds reallocated to the Garage Contingency Fund. For example (but without limitation), BART may reallocate Garage Contingency Funds and/or funds from the BART Cost Budget to provide funding for additional TI Change Orders if the TI Contingency Fund has been exhausted.

SECTION VI.
GENERAL PROVISIONS

6.01 Indemnity.

(a) Developer shall indemnify, defend and hold BART and its directors, officers, agents and employees harmless against all claims, demands, damages, losses, costs, expenses, including without limitation attorneys' fees and costs of litigation, or liabilities made against them that arise out of or in connection with the construction of the Phase I Improvements or other activities undertaken pursuant to this Agreement; provided, however, that this indemnity shall not extend to any claim arising solely from the gross negligence or willful misconduct of the indemnified party or the intentional failure of BART to perform its obligations under this Agreement. Notwithstanding the foregoing, with respect to construction defects, BART shall look first, to the extent available and applicable, to the express warranties and other rights against the General Contractor(s) for the BART Garage, the Plaza Improvements and the Transportation Improvements assigned to BART by Developer pursuant to Sections 2.17(d), 3.17(c) and 4.16(c), respectively.

(b) BART shall indemnify, defend and hold Developer and its officers, members, agents and employees harmless against all claims, demands, damages, losses, costs, expenses, including without limitation attorneys' fees and costs of litigation, or liabilities made against them that arise out of or in connection with the acts or omissions of BART, its agents, officers, employees, and contractors in connection with the Plaza, the Transportation Improvements and the BART Garage Parcel; provided, however, that this indemnity shall not extend to any claim arising solely from the gross negligence or willful misconduct of the indemnified party or the intentional failure of Developer to perform its obligations under this Agreement.

6.02 Defaults by Developer. The following events are "Events of Default":

(a) If Developer shall default in the performance of its obligations under this Agreement, and fails to cure such default within thirty (30) days after written notice (unless a longer or shorter time period is provided for under this Agreement) by BART specifying such failure, unless such failure requires work to be performed, acts to be done or conditions to be removed that cannot, by their nature, reasonably be performed or removed, as the case may be, within such period, in which case no Event of Default shall be deemed to exist as long as Developer shall have commenced curing the same within such period and shall prosecute the same to completion with reasonable diligence.

(b) In the event of an Event of Default, BART shall have the right to (i) enforce the Completion Guaranty, or (ii) terminate this Agreement by notice to Developer and either (A) require any or all of the construction plans, contracts, subcontracts and purchase orders be assigned to BART (without thereby releasing Developer from any liability thereunder arising prior to the date of such assignment) and take possession of and use all or any part of the materials and other property of every kind used by Developer in the performance of the work under this Agreement, and/or (B) complete the work under this Agreement in any manner it deems desirable, including engaging the services of other parties, and/or (C) if applicable,

enforce its rights under the Bridge Indemnity. Any such act by BART shall not be deemed a waiver of any other right or remedy of BART. The rights and remedies of BART against Developer under this Section 6.02 shall be non-exclusive and shall be in addition to all other remedies available to BART at law or in equity; provided, however, that in no event shall BART be entitled to consequential or punitive damages.

(c) No exercise of remedies by BART pursuant to the terms of this Agreement shall negate any right BART may have under the BRIDGE Indemnity.

6.03 BART Default. The following shall constitute Events of Default by BART:

(a) A default by BART in the performance of any agreement or obligation under this Agreement that is not cured within thirty (30) days after receipt of written notice (unless a shorter or longer time period is provided for under this Agreement) from Developer specifying the default or, in the case of a default that cannot with diligence be cured in such period, one that BART fails to proceed promptly to cure and to prosecute the cure to completion with diligence.

(b) In the event of an Event of Default by BART, Developer shall have the right to terminate this Agreement by notice to BART, as well as all the rights and remedies available to Developer at law or in equity; provided, however, that in no event shall Developer be entitled to consequential or punitive damages. Notwithstanding the foregoing, Developer agrees that no default by BART under this Agreement shall constitute a breach entitling Developer to abandon or suspend construction of the BART Garage, the Plaza Improvements or the Transportation Improvements.

6.04 Alternative Dispute Resolution.

(a) Notwithstanding any other provisions of this Agreement, any disputes among or between the parties under this Agreement regarding the Final Plans, the Plaza Improvement Plans or the Transportation Improvement Plans, whether the Construction of the Phase I Improvements have or are being carried out in accordance with this Agreement and the approved Final Plans or Plaza Improvement Plans or Transportation Improvement Plans or any other provision stating that disputes are to be resolved in accordance with Section 6.04 shall be resolved in the manner specified in this Section 6.04, provided, that this Section 6.04 shall not prevent BART from taking action permitted under this Agreement in the event of an emergency.

(b) If an issue that is subject to resolution under this Section 6.04 is in dispute between the parties, either party may promptly convene a telephonic or in-person meeting of the BART Representative and Site Representative or Developer Representative to discuss the issue.

(c) If the issue cannot be resolved within five (5) days following the request for a telephonic or in-person meeting pursuant to subsection (b), then the issue shall be referred to a meeting of the representatives of BART and Developer indicated below. Prior to the meeting, the disputing party shall submit to the other party a written statement setting forth the issues, explanation and support of the party's position including applicable references to documents cited by this Agreement. In addition, if the issue involves cost or time impact that the party believes may be compensable from the other party, the disputing party also shall submit

with the statement a detailed cost estimate with supporting breakdown of costs in accordance with Section 2.16(e), 3.16(e) or 4.15(e), as applicable, and a scheduling analysis of the time impact in accordance with Articles 4 and 8 of AIA Document A201-1997 (General Conditions for the Contract of Construction), Section 2.16(g), 3.16(g) or 4.15(g), as applicable, and following the criteria of the BFS scheduling specification. The documentation shall be in sufficient detail to allow the other party to ascertain the basis and impact of said issue. That meeting shall be held within ten (10) days following the meeting provided for in subsection (b) and may be a telephonic or in-person meeting. The representative for BART shall be the Capital Project's Group Manager of Transportation System Development and the representative for Developer shall be the Developer Representative.

(d) If the issue cannot be resolved at the meeting provided for in subsection (c) or within five (5) days thereafter, then the issue shall be referred to a meeting of the representatives of BART and Developer indicated below. That meeting shall be held within ten (10) days following the meeting provided for in subsection (c) and shall be an in-person meeting. The representative for BART shall be Assistant General Manager of Transportation System Development and the representative for Developer shall be the Developer Representative or an officer of Developer's managing member.

(e) At each meeting held pursuant to subsections (b), (c) or (d), the parties agree to use good faith efforts to settle the issue in question. If the issue is resolved at one of those meetings, the representatives of the parties in attendance at the meeting shall execute a written agreement or memorandum that shall set forth in reasonable detail the resolution terms, the action or actions to be taken by a party as part of the resolution and the period in which such action or actions (if any) are to be completed. The executed agreement or memorandum shall be binding on the parties to this Agreement.

(f) If the issue or any part of the issue cannot be resolved at the meeting provided for in subsection (d), then the remaining issue may be referred to nonbinding mediation if both parties agree to mediation. If one party objects, either party may require arbitration in accordance with subsection (j). The mediation shall proceed in accordance with rules promulgated by the mediator ("Mediator"), chosen as described in subsection (g). Lawyers may participate only if all parties agree. The entire process shall be confidential and treated as a compromise negotiation for purposes for federal and state rules of evidence. The parties shall each pay one-half of the costs of the Mediator.

(g) Within ten (10) days of the dispute being referred to mediation, the parties shall meet and select a disinterested third party to act as Mediator. If the parties fail to agree, any party may request the American Arbitration Association in San Francisco to appoint a Mediator. The Mediator may be replaced within ten (10) days from receipt of written request by any party, using the procedure outlined above, provided, however, that any party may only replace the Mediator once. The Mediator shall convene the mediation session not later than ten (10) business days after his or her selection.

(h) If the parties are able to resolve their dispute through mediation, the representatives of the parties in attendance at the meeting shall execute a written agreement or memorandum that shall set forth in reasonable detail the resolution terms, the action or actions to

be taken by a party as part of the resolution and the period in which such action or actions (if any) are to be completed. The executed agreement or memorandum shall be binding on the parties to this Agreement.

(i) If an issue arises that is to be resolved pursuant to this Section 6.04 and the resolution of the issue may affect the course or schedule for future elements of the construction of the Phase I Improvements, then the parties shall use good faith and diligent efforts to complete the various resolution steps set forth in this Section 6.04 in as short a period as possible so that the lack of resolution of the issue will not materially interfere with or extend the time of Construction of the Phase I Improvements.

(j) If the parties are unable to resolve their dispute through mediation, the matter in dispute shall be determined by arbitration in Oakland, California before a single arbitrator and, unless the parties mutually agree otherwise, shall be administered by Judicial Arbitration & Mediation Services (JAMS) pursuant to its Streamlined Arbitration Rules and Procedures in effect on the date of this Agreement. A demand for arbitration shall be made in writing delivered to the other party and filed with the person or entity administering the arbitration. The party filing a notice of demand for arbitration must assert in the demand all claims then known to that party on which arbitration is permitted to be demanded. The award rendered by the arbitrator shall be final and judgment may be entered upon it in accordance with applicable law in any court having jurisdiction thereof. The arbitrators shall not have the power to commit errors of law or legal reasoning, and the award may be vacated or corrected on appeal to a court of competent jurisdiction for any such error. The foregoing agreement to arbitrate shall be specifically enforceable under applicable law in any court having jurisdiction thereof. The arbitrator shall determine which party is the prevailing party and shall award attorneys fees and costs incurred in the underlying dispute and Arbitration.

6.05 Assignment.

Developer shall not assign this Agreement without the consent of BART to any person or entity other than BRIDGE Economic Development Corporation. In no event shall any assignment by Developer release Developer from its obligations under this Agreement. This section shall in no way prevent or limit Developer from entering into any contracts with the General Contractor, contractors, subcontractors or materialpersons that may be necessary or desirable in the performance of Developer's responsibilities under this Agreement and subject to the conditions set forth in this Agreement.

6.06 Mutual Cooperation.

BART and Developer shall mutually cooperate in good faith in undertaking the actions necessary to implement this Agreement; and BART shall assist Developer at no cost to BART in obtaining all approvals, permits, and authorizations necessary for Developer to performs its obligations hereunder, whether such approvals, permits and authorizations are by BART individually, or other parties or agencies related to BART.

6.07 Unavoidable Delays; Force Majeure.

In addition to specific provisions of this Agreement, a party shall not be deemed to be in default in the performance of its obligations where delays or defaults are due to any of the following: war; insurrection; strikes or substantial interruption of work because of labor disputes; lock-outs; riots; floods; tidal waves, earthquakes; fires; quarantine restrictions; epidemics; casualties; acts of God; acts of the public enemy; epidemics; government restrictions or priorities; freight embargoes, inability to obtain materials or reasonably acceptable substitute materials (provided Developer has ordered such materials on a timely basis and the acts or omissions of Developer are not otherwise at fault for such inability to obtain materials); unusually inclement or severe weather; lack of transportation; government restrictions or priorities; court order; interference with Construction by other BART work; failure of BART to respond timely to requests for required approvals or to disburse funds for Construction of the Plaza Improvements in accordance with and as required by the terms of the Pass-Through Agreement, any suspension of funding or failure to fund by the Agency as required under the HCD Funding Agreement or the Owner Participation Agreement between Developer and the Agency (provided the suspension or failure to fund is not caused by a breach by Developer of the terms of the applicable grant agreement or the OPA or by the failure to make timely submission of requests for reimbursement); or any other similar causes (other than lack of funds of Developer) beyond the control or without the fault of the party claiming an extension of time to perform. Times of performance under this Agreement also may be extended by written agreement of BART and Developer. Notwithstanding the preceding sentences, in no event shall the date after which BART may terminate this Agreement pursuant to Section 2.10, 3.09 or 4.09 be extended pursuant to this section except as provided in such Section 2.10, 3.09 or 4.09, as applicable. Any dispute concerning the occurrence of an event of Force Majeure shall be subject to the dispute resolution procedures set forth in Section 6.04.

6.08 Delivery of Plans.

In the event this Agreement is terminated for any reason, Developer shall, at the request of BART, provide to BART a complete set of any plans and specifications for construction of the Phase I Improvements. These plans and specifications shall be provided at no cost to the Agency or BART. Developer makes no warranty or representation as to the usability or accuracy of those plans and specifications. BART shall not have the right to the use of the plans and specifications except on the following conditions: BART may use the plans and specifications, without cost or liability to Developer or any other person; provided, however, that BART will indemnify, defend, and hold harmless Developer and Developer's architect, engineer, or other consultant from liability arising out of the use of the plans and specifications, except to the extent of liability caused by the negligence or willful misconduct of the party to be indemnified. The liability of Developer or Developer's architect, engineer or other consultant to BART or any other party for the plans and specifications will be limited to any available insurance proceeds under insurance policies required of Developer, Developer's architect or engineer under Developer's agreements with the architect or engineer; provided that Developer will cooperate with BART to assign or extend such policies so long as BART or other party pays any additional costs for such assignment or extension. Developer shall include in all contracts and authorizations for services pertaining to the planning and design of the Phase I Improvements an express agreement by the person performing such services that BART may use such plans and

specifications without compensation or payment from BART in the event such plans and specifications are delivered to BART pursuant to the provisions of this section, provided that BART agrees (a) not to remove the name of the preparer of such plans and specifications without the preparer's written permission, or (b) to remove it at the preparer's written request. BART may review any and all such contracts to determine compliance with this section and require reasonable certificates from applicable design professionals certifying to the availability of the plans and specifications to BART on the terms outlined above.

6.09 Further Assurances.

The parties hereto agree to execute and acknowledge such other and further documents as may be necessary or reasonably required to express the intent of the parties or otherwise effectuate the terms of this Agreement.

6.10 No Recourse.

Except to the extent of the Completion Guarantee to be provided pursuant to this Agreement and the BRIDGE Indemnity, BART agrees that it will not have any recourse with respect to any obligation of Developer under this Agreement, or for any claim based upon this Agreement, against any members, partners, officers, directors, principals, shareholders, or attorneys, past, present or future, of Developer.

6.11 Waiver.

No waiver of any default under this Agreement shall constitute or operate as a waiver of any subsequent default hereunder, and no delay, failure or omission in exercising or enforcing any right, privilege or option under this Agreement shall constitute a waiver, abandonment or relinquishment thereof or prohibit or prevent any election under or enforcement or exercise of any right, privilege or option hereunder. No waiver of any provision hereof by BART or Developer shall be deemed to have been made unless and until such waiver shall have been reduced to writing and signed by BART or Developer, as the case may be. The receipt and acceptance by Developer of any amount owing under this Agreement with knowledge of any default under this Agreement shall not constitute or operate as a waiver of such default. Failure by BART to enforce any of the terms, covenants or conditions of this Agreement for any length of time or from time to time shall not be deemed to waive or decrease the right of BART to insist thereafter upon strict performance by Developer.

6.12 Notices.

If at any time after the execution of this Agreement it shall become necessary or convenient for one of the parties to this Agreement to serve any notice, demand or communication upon the other party, such notice, demand or communication shall be in writing and shall be served personally with delivery receipt, or dispatched by the certified United States mail, return receipt requested, postage prepaid, or by facsimile transmission with a copy mailed by first class United States mail to the address listed below, or reputable overnight service with a receipt showing the date of delivery and:

If intended for BART:

BART
300 Lakeside Drive
Oakland, CA 94612

With a copy to:

Attn: Manager of Real Estate and Property Development
(16th Floor, Facsimile No. (510) 464-7673), and
Attn: Office of the General Counsel
(23rd Floor, Facsimile No. (510) 464-6049)

If intended for Developer:

MacArthur Transit Community Partners, LLC
c/o BRIDGE Economic Development Corporation
345 Spear Street, Suite 700
San Francisco, CA 94105
Attn: President
Facsimile No.: (415) 495-4898

Notices shall be deemed received as follows: if given by certified United States mail, on the date actually received, the date delivery was refused, or the date the item was returned as undeliverable; if given by facsimile transmission, upon receipt so long as the sending fax electronically confirms receipt and a hard copy follows by United States mail as required above (provided that in the event the facsimile is sent after 5:00 pm, the notice shall be deemed received on the following business day); if given by hand delivery or delivery service with a delivery receipt, on the date shown on the delivery receipt as the date of delivery, the date delivery was refused, or the date the item was returned as undeliverable.

Any notice, demand or other communication under this Agreement may be given on behalf of a party by the attorney for such party.

Such written notices, demands and communications may be sent in the same manner to such other addresses as the affected party may from time designate by notice as provided in this Section.

Whenever the approval, consent or other action of a party will be deemed to be given or taken within a period of time, pursuant to a provision of this Agreement, the item submitted or request for action shall be made in writing to such party and shall be accompanied by written notice stating that it is being submitted or requested pursuant to a provision of this Agreement identified in such notice and stating that such item will be deemed approved or that a specified action will be deemed taken within an identified period of time (as specified by such Agreement provision), unless objection is made or other action taken within the time stated in such notice.

6.13 Independent Developer.

In performing its obligations under this Agreement, Developer shall be deemed an independent contractor and not an agent or employee of BART.

6.14 Governing Law.

This Agreement shall be interpreted in accordance with and governed by the laws of the State of California.

6.15 Captions.

The captions used herein are for convenience of reference only and are not a part of this Agreement and do not in any way limit or amplify the terms and provisions hereof.

6.16 Severability.

All rights, powers and remedies provided in this Agreement may be exercised only to the extent that the exercise thereof does not violate any applicable law and is intended to be limited to the extent necessary so that such exercise will not render this Agreement invalid, unenforceable or not entitled to be recorded under applicable law. If any term of this Agreement shall be held to be invalid, illegal or unenforceable, the validity of the other terms of this Agreement shall in no way be affected thereby.

6.17 Third Party Rights.

Except as provided in this Section, nothing in this Agreement shall create or shall give to third parties any claim or right of action against BART or Developer beyond such as may legally exist, irrespective of this Agreement.

6.18 Modification.

This Agreement may not be amended or modified in any respect whatsoever except by an instrument in writing signed by the parties; provided, however that any change in or modification, termination or discharge of this Agreement expressly provided for in this Agreement shall be effective as so provided.

6.19 Entire Agreement.

This Agreement and the agreements referenced herein constitute the entire agreement between BART and Developer with respect to the subject matter hereof and supersede all prior offers and negotiations, oral and written. Notwithstanding the foregoing or anything else herein to the contrary, nothing in this Agreement shall affect BART's right to enforce the Bridge Indemnity.

6.20 Counterparts.

This Agreement may be executed in counterparts, each of which shall be an original, but all of which shall constitute one and the same Agreement.

6.21 Time of the Essence.

Time is of the essence of each and all of the agreements, covenants and conditions of this Agreement.

6.22 Attorneys Fees.

In the event of any action or proceeding at law or in equity between the parties to enforce any provision of this Agreement or to protect or establish any right or remedy of either party hereunder, the unsuccessful party to such litigation shall pay to the prevailing party all costs and expenses, including reasonable attorneys' fees incurred therein by such prevailing party, and if such prevailing party shall recover judgment in any such action or proceeding, such costs, expenses and attorneys' fees shall be included in and as a part of such judgment.

6.23 Binding Effect.

This Agreement shall be binding upon and inure to the benefit of the successors in interest and assigns of each of the parties hereto except that there shall be no transfer of any interest in this Agreement by any of the parties hereto except pursuant to the terms of this Agreement. Any reference in this Agreement to a specifically named party shall be deemed to apply to any successor or assign of such party who has acquired an interest in compliance with the terms of this Agreement or under applicable law.

6.24 Calendar Days.

All references to "days" in this Agreement shall refer to calendar days, unless specifically designated otherwise.

(Signatures continued on next page.)

IN WITNESS WHEREOF, the parties executed this Agreement on or as of the date first written above.

MACARTHUR TRANSIT COMMUNITY PARTNERS, LLC, a California limited liability company

By: BRIDGE Economic Development Corporation, a California nonprofit public benefit corporation, its managing member

By: _____
Cynthia A. Parker, President + CEO

ATTEST

_____
Secretary

BART:

SAN FRANCISCO BAY AREA RAPID TRANSIT DISTRICT

By: _____
Its ~~General~~ Manager of Real Estate and Property Development

Approved as to form:

_____
General Counsel

IN WITNESS WHEREOF, the parties executed this Agreement on or as of the date first written above.

MACARTHUR TRANSIT COMMUNITY PARTNERS, LLC, a California limited liability company

By: BRIDGE Economic Development Corporation, a California nonprofit public benefit corporation, its managing member

By: _____
Cynthia A. Parker, President

ATTEST

_____
Secretary

Approved as to form:

_____

General Counsel

BART:

SAN FRANCISCO BAY AREA RAPID TRANSIT DISTRICT

By: _____
Its General Manager

EXHIBIT A

Description of BART Garage Parcel

Parcel E, as shown on the attached final map for Tract No. 8047 within the City of Oakland, which is to be recorded in the Official Records of Alameda County, California in accordance with the provisions of the Option Agreement.

PARCEL RECONFIGURATION

SCALE: 1"=50'

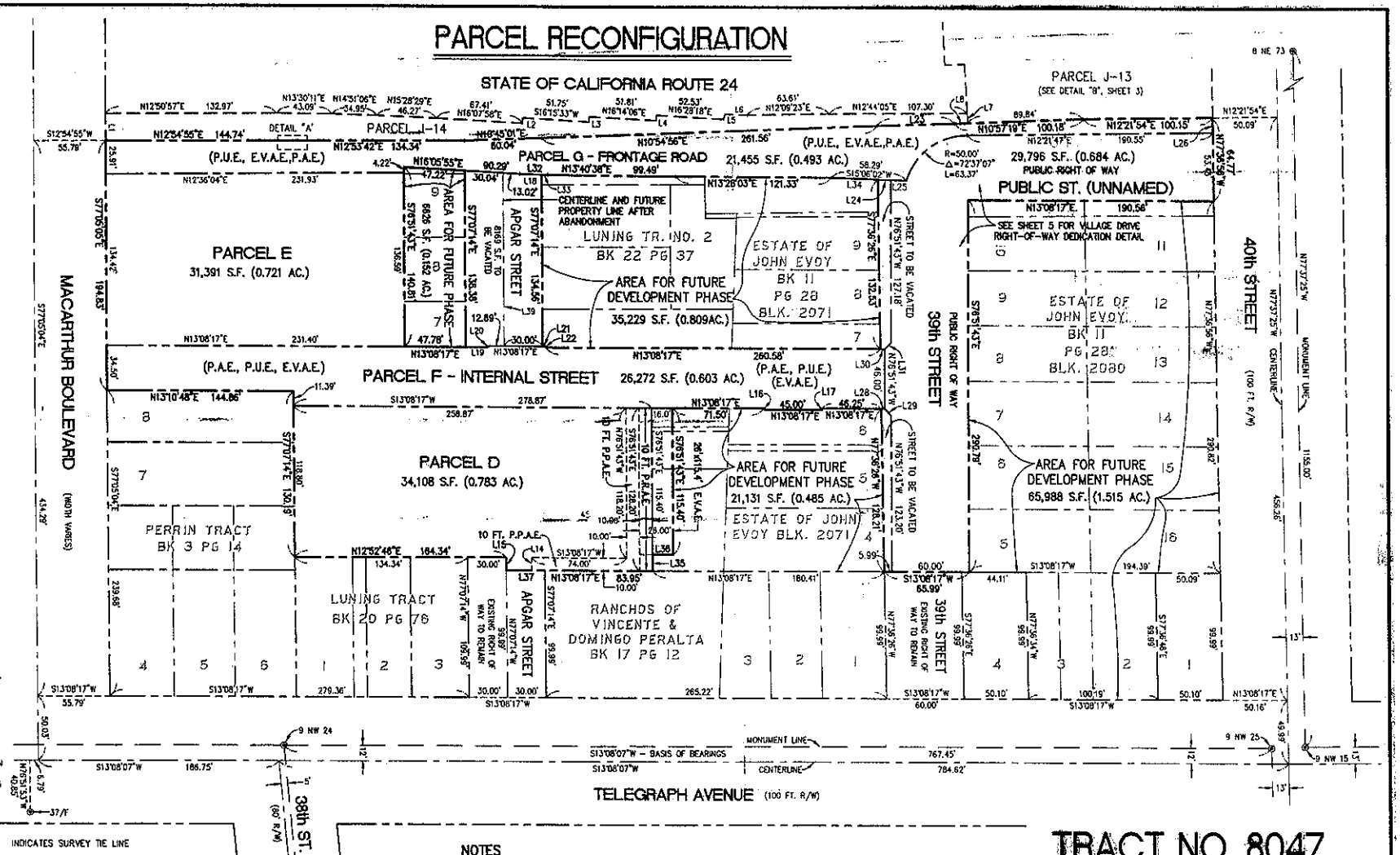

DETAIL "A"
N.T.S.

LINE TABLE

L1	N77°05'05"W	21.03'
L2	N74°13'59"W	4.12'
L3	N73°06'13"W	3.95'
L4	N74°07'10"W	4.10'
L5	N63°48'19"W	4.00'
L6	N14°50'57"E	17.61'
L7	S79°41'02"E	7.41'
L8	S10°57'19"W	10.34'
L9	S79°39'13"E	57.20'
L10	N10°16'56"E	15.64'
L11	S79°43'04"E	63.78'
L12	N12°12'28"E	15.51'
L13	S79°41'02"E	45.53'
L14	S77°07'14"E	10.00'
L15	S77°06'55"E	10.07'
L16	N76°51'43"W	1.00'
L17	N76°51'43"W	1.00'
L18	N15°07'56"E	17.01'
L19	N13°08'17"E	17.30'
L20	N76°51'43"W	1.00'
L21	S13°08'17"W	2.31'
L22	S76°51'43"E	1.00'
L23	N11°18'46"E	60.01'
L24	N15°06'02"E	9.98'
L25	N15°06'02"E	12.10'
L26	S79°13'33"E	11.32'
L27	DELETED	DEL.
L28	N13°08'17"E	2.95'
L29	N58°08'17"E	7.07'
L30	N13°08'17"E	3.25'
L31	N31°51'43"W	7.07'
L32	N13°07'56"E	21.78'
L33	N15°07'56"E	4.77'
L34	N15°06'02"E	56.21'
L35	N76°51'43"E	12.60'
L36	N13°18'17"W	16.00'
L37	N13°08'17"W	30.00'
L38	DELETED	DEL.
L39	S77°07'14"E	135.82'
L40	S77°07'14"E	99.99'

OWNERS / SUBDIVIDERS

SAN FRANCISCO BAY AREA RAPID TRANSIT DISTRICT
300 LAKESIDE DRIVE
OAKLAND, CALIFORNIA 94612

MACARTHUR TRANSIT COMMUNITY PARTNERS, LLC
C/O BRIDGE HOUSING CORPORATION
345 SPEAR STREET, SUITE 700
SAN FRANCISCO, CALIFORNIA 94105

LEGEND

- INDICATES SURVEY TIE LINE
- INDICATES BOUNDARY OF TRACT MAP NO. 8047
- INDICATES INTERNAL PROPERTY LINE TO BE CREATED ON THIS MAP
- INDICATES EASEMENT LINE
- INDICATES EXISTING PROPERTY LINE
- INDICATES INTERNAL LOT LINE
- INDICATES JOINT USE PARCEL
- INDICATES ROAD CENTERLINE
- INDICATES MONUMENT LINE
- ● FOUND CITY OF OAKLAND PIN MONUMENT WITH NUMBER, UNLESS NOTED OTHERWISE
- ( )1 RECORD DATA PER REFERENCE MAP

BASIS OF BEARINGS

THE BEARING OF S13°08'07"W, AS CALCULATED BETWEEN CITY OF OAKLAND MONUMENTS 9 NW 24 AND 9 NW 25, WAS TAKEN AS THE BASIS OF BEARINGS FOR THIS MAP.

SCALE FACTOR

BEARINGS AND DISTANCES ARE RELATED TO THE CALIFORNIA COORDINATE SYSTEM ZONE 3, N.A.D. 1927, AS ESTABLISHED BY CITY OF OAKLAND MONUMENTS AND RECORD DATA SHOWN ON RIGHT-OF-WAY MAPS FOR HIGHWAY 24 AND THE SAN FRANCISCO BAY AREA RAPID TRANSIT DISTRICT. FOR GROUND DISTANCES, MULTIPLY DISTANCES SHOWN BY 1.000748.

NOTES

1.) ALL DISTANCES ARE IN FEET AND DECIMALS THEREOF.
2.) ALL DISTANCES SHOWN ARE BASED ON FIELD MEASUREMENTS OR CALCULATED, UNLESS OTHERWISE DENOTED BY RECORD REFERENCE.
3.) JOINT USE PARCELS J-13 & J-14 ARE NOT INTENDED TO BE INCLUDED WITHIN THE BOUNDARY OF TRACT NO. 8047
4.) ALL EXISTING LOT LINES WITHIN THE BOUNDARY ARE TO BE REMOVED UPON THE RECORDING OF THIS MAP.

EASEMENT LEGEND

P.A.E.	PUBLIC ACCESS EASEMENT
P.P.A.E.	PUBLIC PEDESTRIAN ACCESS EASEMENT
P.R.A.E	PRIVATE ROAD ACCESS EASEMENT
P.U.E.	PUBLIC UTILITY EASEMENT
E.V.A.E	EMERGENCY VEHICLE ACCESS EASEMENT

TRACT NO. 8047

PHASE 1 OF VESTING TENTATIVE MAP 8047
LANDS OF THE SAN FRANCISCO BAY AREA RAPID TRANSIT DISTRICT – MACARTHUR STATION AREA
CITY OF OAKLAND COUNTY OF ALAMEDA
JUNE, 2011

SANDIS CIVIL ENGINEERS SURVEYORS PLANNERS
638 E. Duane Avenue | Sunnyvale, CA 94086 | P. 408.636.0900 | F. 408.636.0960 | www.sandis.net
SUNNYVALE ROSEVILLE OAKLAND

607128

EXHIBIT B

Legal Description of Other BART Property

ALL THAT CERTAIN REAL PROPERTY IN THE CITY OF OAKLAND, COUNTY OF ALAMEDA AND STATE OF CALIFORNIA, BEING PORTIONS OF THE ESTATE OF JOHN EVOY IN PLOT 36, AS FILED AUGUST 12, 1886 IN BOOK 11 OF MAPS, AT PAGE 28, PORTIONS OF THE MONTGOMERY TRACT NO. 1, AS FILED APRIL 2, 1875 IN BOOK 1 OF MAPS, AT PAGE 77, A PORTION OF PLOT 37, RANCHOS OF VINCENTE AND DOMINGO PERALTA, DATED JANUARY 21, 1857, A COPY OF WHICH WAS FILED IN BOOK 17 OF MAPS, AT PAGE 12, PORTIONS OF THE LUNING TRACT NO. 2, AS FILED FEBRUARY 19, 1907 IN BOOK 22 OF MAPS, AT PAGE 37, PORTIONS OF THE LUNING TRACT, AS FILED OCTOBER 5, 1905, IN BOOK 20 OF MAPS, AT PAGE 76, AND PORTIONS OF THE PERRIN TRACT, AS FILED JUNE 2, 1877 IN BOOK 3 OF MAPS, AT PAGE 14, ALL IN THE RECORDS OF ALAMEDA COUNTY, MORE PARTICULARLY DESCRIBED AS FOLLOWS:

COMMENCING AT THE NORTHEAST CORNER OF LOT 1, BLOCK NO. 2080, AS SHOWN ON SAID MAP OF THE ESTATE OF JOHN EVOY IN PLOT 36, SAID CORNER ALSO BEING THE INTERSECTION OF THE SOUTH LINE OF 40TH STREET (100 FEET WIDE) AND THE WEST LINE OF TELEGRAPH AVENUE (100 FEET WIDE);

THENCE SOUTH 13°08'17" WEST ALONG THE WEST LINE OF TELEGRAPH AVENUE, A DISTANCE OF 200.39 FEET TO AN INTERSECTION WITH THE NORTH LINE OF 39TH STREET (60 FEET WIDE);

THENCE CONTINUE SOUTH 13°08'17" WEST ALONG THE WEST LINE OF TELEGRAPH AVENUE, A DISTANCE OF 60.00 FEET TO AN INTERSECTION WITH THE SOUTH LINE OF 39TH STREET;

THENCE NORTH 77°36'26" WEST ALONG THE SOUTH LINE OF 39TH STREET, A DISTANCE OF 99.99 FEET TO THE POINT OF BEGINNING AT THE NORTHEAST CORNER OF LOT 4, BLOCK NO. 2071, OF SAID MAP OF THE ESTATE OF JOHN EVOY IN PLOT 36;

THENCE SOUTH 13°08'17" WEST ALONG THE EAST LINE OF SAID LOT 4 AND THE SOUTHERLY PROJECTION THEREOF, A DISTANCE OF 264.37 FEET TO AN INTERSECTION WITH THE NORTH LINE OF APGAR STREET(60 FEET WIDE);

THENCE SOUTH 22°35'56" WEST A DISTANCE OF 60.87 FEET TO AN INTERSECTION WITH THE SOUTH LINE OF APGAR STREET, AT THE NORTHEAST CORNER OF LOT 4 OF SAID LUNING TRACT;

THENCE SOUTH 12°52'46" WEST ALONG THE EAST LINE OF SAID LOT 4, A DISTANCE OF 134.34 FEET TO AN INTERSECTION WITH THE NORTH LINE OF LOT 6 OF SAID PERRIN TRACT;

THENCE NORTH 77°07'14" WEST ALONG THE NORTH LINE OF SAID PERRIN TRACT, A DISTANCE OF 290.68 FEET TO THE NORTHEAST CORNER OF LOT 12 OF SAID PERRIN TRACT;

THENCE SOUTH 12°54'55" WEST ALONG THE EAST LINE OF SAID LOT 12, A DISTANCE OF 144.76 FEET TO AN INTERSECTION WITH THE NORTH LINE OF MACARTHUR BOULEVARD (WIDTH VARIES), FORMERLY 38TH STREET (60 FEET WIDE), AS SHOWN OF SAID PERRIN TRACT;

THENCE NORTH 77°05'05" WEST ALONG THE NORTH LINE OF MACARTHUR BOULEVARD, A DISTANCE OF 35.01 FEET TO AN INTERSECTION WITH THE WEST LINE OF THE STATION AREA,

ALSO BEING THE EAST LINE OF STATE OF CALIFORNIA ROUTE 24, AS SHOWN ON THE RECORD MAPS OF RIGHT OF WAY, BAY AREA RAPID TRANSIT DISTRICT, ALAMEDA COUNTY, AS FILED SEPTEMBER 6, 1974 IN BOOK 68 OF MAPS, AT PAGES 173-230, ALAMEDA COUNTY RECORDS;

THENCE NORTHERLY ALONG LAST DESCRIBED LINE, THE FOLLOWING COURSES:

1.) NORTH 12°54'55" EAST A DISTANCE OF 144.74 FEET;

2.) NORTH 77°07'14" WEST A DISTANCE OF 0.18 FEET;

3.) NORTH 12°53'42" EAST A DISTANCE OF 134.34 FEET;

4.) NORTH 10°45'01" EAST A DISTANCE OF 60.04 FEET;

5.) NORTH 10°54'56" EAST A DISTANCE OF 261.56 FEET;

6.) NORTH 11°18'48" EAST A DISTANCE OF 60.01 FEET;

7.) NORTH 10°57'19" EAST A DISTANCE OF 100.18 FEET; AND

8.) NORTH 12°21'54" EAST A DISTANCE OF 100.15 FEET TO AN INTERSECTION WITH THE SOUTH LINE OF 40TH STREET;

THENCE SOUTH 77°36'56" EAST ALONG THE SOUTH LINE OF 40TH STREET, A DISTANCE OF 355.59 FEET TO THE NORTHEAST CORNER OF LOT 16, BLOCK NO. 2080 OF SAID ESTATE OF JOHN EVOY IN PLOT 36;

THENCE SOUTH 13°08'17" WEST ALONG THE EAST LINE OF LOTS 16 AND 5 OF SAID BLOCK NO. 2080, A DISTANCE OF 200.37 FEET TO AN INTERSECTION WITH THE NORTH LINE OF 39TH STREET;

THENCE SOUTH 13°08'17" WEST A DISTANCE OF 60.00 FEET TO THE POINT OF BEGINNING.

CONTAINING 5.756 ACRES, MORE OR LESS.

THE PROPERTY DESCRIBED HEREON IS SHOWN ON THE ATTACHED PLAT, AND BY REFERENCE, MADE A PART HEREOF.

FILE: SFBARTD.072710.DOC
July 27, 2010

PROFESSIONAL LAND SURVEYOR
DAVID W. BETHAM
NO.
PLS 7047
Exp. 12/31/10
STATE OF CALIFORNIA

7-27-10

EXHIBIT C

Map of Project Site

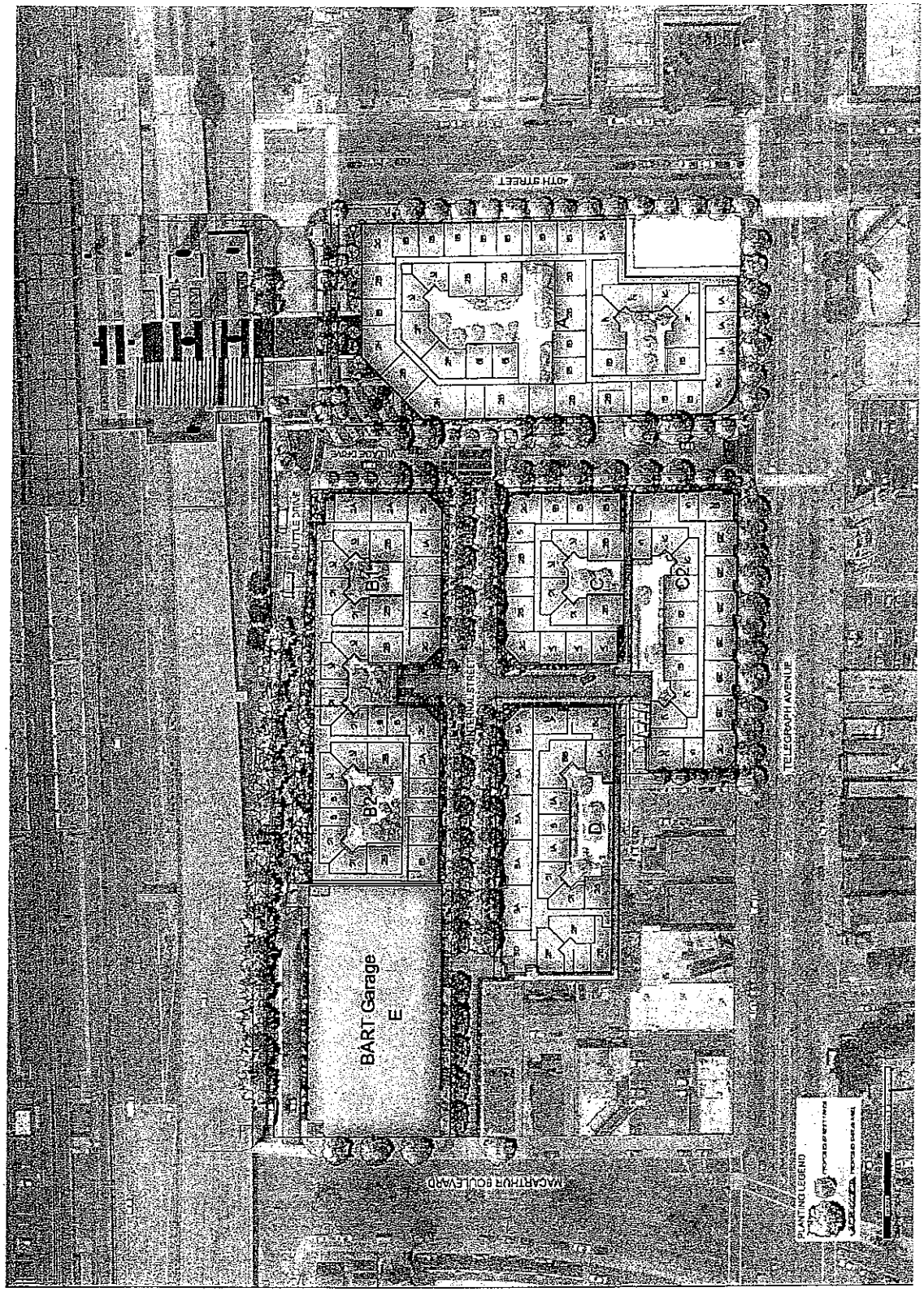

EXHIBIT D

Description of Plaza Improvements

The BART Plaza will be renovated and include the following elements:

- Removal of existing landscaping planters.
- Removal or relocation of public art to improve the Plaza's circulation.
- Creation of a horizontal trellis/baffles element to provide visual interest and mitigation of freeway sound.
- Installation of a secured bicycle station for at least 200 bikes (subject to funding availability) and bike racks and/or lockers.
- Replacement or refurbishment of the Plaza's floor materials.
- Installation of a covered shuttle stop waiting area.
- Installation of wayfinding signage. Should sufficient funds be available, such signage shall include real time transit information for both AC Transit and shuttle bus services.
- New and/or refurbished lighting.

EXHIBIT E

Completion Guaranty
COMPLETION GUARANTY
Phase I Improvements

THIS GUARANTY (the "Guaranty") is made as of _____, 2011 by BRIDGE HOUSING CORPORATION, a California non-profit corporation ("Guarantor"), in favor of the SAN FRANCISCO BAY AREA RAPID TRANSIT DISTRICT, a rapid transit district established pursuant to Public Utilities Code Sections 28500 et seq. ("BART").

RECITALS

A. BART has entered into a Design and Construction Agreement with MacArthur Transit Community Partners, LLC, a California limited liability company ("Developer"), dated _____, as it may be amended from time to time (the "Construction Agreement"), setting forth the framework that Developer and BART will follow for the construction of the Phase I Improvements.

B. This Guaranty is intended to cover Developer's obligations under the Construction Agreement as they relate to the completion of construction of the Phase I Improvements.

C. Capitalized terms not separately defined in this Guaranty shall have the meaning set forth in the Construction Agreement.

NOW, THEREFORE, in order to induce BART to enter into the Construction Agreement, and in consideration thereof, Guarantor guarantees and agrees as follows:

1. Guaranty.

Guarantor guarantees the following:

1.1 That Developer will complete construction of the Phase I Improvements in accordance with the Construction Agreement and the Final Plans for the BART Garage (collectively, the "Construction Documents") on or before the dates specified in the Construction Agreement for the completion thereof. Developer will complete the Phase I Improvements free and clear of any liens for material, labor or services, if, as, when and to the extent that Developer is obligated to complete the Phase I Improvements pursuant to the Construction Documents.

1.2 The obligations of Developer referred to in Section 1.1 are referred to in this Guaranty as the "Obligations."

2. Event of Default by Developer.

2.1 An "Event of Default" shall be deemed to have occurred with respect to Developer's Obligations under Section 1.1 above if Developer fails to complete the Phase I Improvements in accordance with the applicable Construction Documents on or before the dates set forth in the Construction Agreement. An "Event of Default" shall not be deemed to have occurred until expiration of any applicable cure periods provided to Developer under the Construction Agreement.

2.2 BART shall notify Guarantor if an "Event of Default" has occurred and Guarantor shall promptly and continuously take actions to complete the Obligations.

3. Default by Guarantor and Remedies.

3.1 If (a) an Event of Default occurs pursuant to Section 2.1, and (b) either (i) such Event of Default has not been cured within fifteen (15) days after written notice from BART to Guarantor, or (ii) if the Event of Default is of such a nature as cannot be cured within such fifteen (15) days, Guarantor fails to commence to cure such Event of Default within fifteen (15) days after written notice from BART to Guarantor or thereafter fails to diligently proceed to cure such Event of Default (any of the foregoing, a "Default"), then, in such event, BART has the following remedies:

(x) at its option and without any obligation to do so, proceed to perform on behalf of Guarantor any and all of the Obligations with respect to which an Event of Default has occurred, and Guarantor shall pay to BART upon demand all sums expended by BART in such performance on behalf of Guarantor in excess of the amounts, if any, that BART is obligated to pay for completion of the Obligations under the Construction Agreement, plus all interest owed by Guarantor pursuant to Section 4; and

(y) from time to time and without requiring performance on the part of Developer and without being required to exhaust any or all security held by BART, to require performance by Guarantor of any Obligation on the part of Guarantor to be performed pursuant to the terms hereof by action at law or in equity, as well as to collect any reasonable expenses incurred in such action and any interest owed by Guarantor pursuant to Section 4. Notwithstanding any provision in this Guaranty to the contrary, if Guarantor fails to perform under this subsection (b), the BART shall be entitled to collect its actual damages from Guarantor for the failure of Guarantor to perform, but such damages shall not include consequential or punitive damages.

3.2 Both of the remedies set forth in Section 3.1 for a Default shall be available to BART, and the choice by BART of one such alternative over another shall not be subject to question or challenge by Guarantor or any other person, nor shall any such choice be asserted as a defense, setoff, or failure to mitigate damages in any action, proceeding, or counteraction by BART to recover or seek any other remedy under this Guaranty. Subject to Section 3.3, once BART has elected to pursue the remedy in either 3.1(x) or 3.1(y) with respect to a Default, BART shall not have the right, without Guarantor's consent, to subsequently elect to exercise a different remedy. The parties have agreed to the alternative remedies hereinabove

specified in part because they recognize that the choice of remedies in the event of a failure hereunder will necessarily be and should properly be a matter of good faith business judgment, which the passage of time and events may or may not prove to have been the best choice to maximize recovery by BART at the lowest cost to Developer and/or Guarantor. It is the intention of the parties that such good faith choice by BART be given conclusive effect regardless of such subsequent developments.

3.3 If Guarantor fails to perform its obligations pursuant to Section 3.1(x) and (y), as the case may be, then BART shall have the right to pursue any remedies available at law or in equity against Guarantor to enforce Guarantor's obligations under this Guaranty;

4. Interest and Attorneys' Fees. Any sum required to be paid by Guarantor to BART pursuant to the terms hereof shall bear interest at a rate equal to the lesser of (a) ten percent (10%) per annum, or (b) the maximum rate permitted by law at the time said sum is due, from the date said sums shall be due until paid. If either party commences an action against the other party arising out of or in connection with this Guaranty, the prevailing party in such action or proceeding or arbitration, including bankruptcy, insolvency, or appellate proceedings shall be entitled to have and recover from the losing party reasonable attorneys' fees, court costs and costs of suit, together with interest thereon for the time and at the rate provided in this Section 4, in addition to any other relief rewards by a court or arbitrator.

5. Consideration. Guarantor acknowledges that its undertakings given hereunder are given in consideration of BART's entering into the Construction Agreement and that BART would not enter into the Construction Agreement were it not for execution and delivery of this Guaranty.

6. No Waiver. No failure on the part of BART to pursue any remedy hereunder or under any or all of the Construction Documents shall constitute a waiver on its part of the right to pursue said remedy on the basis of the same or a subsequent Default by Guarantor or an Event of Default by Developer. No extension, modification, amendment or renewal of the Construction Documents or any security instrument securing the same shall serve to waive the provisions hereof or discharge Guarantor from any obligation herein contained in whole or in part, except to the extent expressly approved by BART in writing.

7. Covenants, Representations and Warranties of Guarantor.

7.1 Guarantor shall advise BART promptly in writing of all actions, suits or proceedings against or involving Guarantor, pending or to its knowledge threatened, at law or in equity, before any federal, state, municipal or other court or governmental department, commission, board, bureau, agency or instrumentality, domestic or foreign, involving the possibility of judgments, penalties or liabilities against Guarantor, reasonably likely to, in the aggregate exceed the greater of five million dollars ($5,000,000) or ten percent (10%) of Guarantor's net worth and that are not reasonably anticipated to be covered by insurance.

7.2 Guarantor represents and warrants to BART as follows:

(a) Guarantor is a non-profit corporation, duly organized, validly existing and in good standing under the laws of California;

(b) The execution, delivery and performance by Guarantor of this Guaranty (i) are within the power of Guarantor, (ii) have been duly authorized by all requisite corporate action, (iii) have received all necessary governmental approval, and (iv) will not violate any provision of law, any order of any court or agency of government, the certificate of incorporation and by-laws (or any other corporation formation documents) of Guarantor, or any indenture, agreement or any other instrument to which Guarantor is a party or by which such Guarantor or its property is bound, or be in conflict with, result in a breach of or constitute (with due notice and/or lapse of time) a default under any such indenture, agreement or other instrument, or result in the creation or imposition of any lien, charge or encumbrance of any nature whatsoever upon any of its property or assets;

(c) This Guaranty, when executed and delivered to BART, will constitute a legal, valid and binding obligation enforceable against such Guarantor in accordance with its terms, except as the same may be limited by laws of bankruptcy, insolvency and laws affecting the rights of creditors generally;

(d) All financial statements and data that have been given or shown to BART or its representatives by Guarantor (i) are complete and correct in all material respects as of the date of each such financial statement, (ii) accurately present the financial condition of Guarantor on the date of such financial statements, and (iii) accurately reflect the results of Guarantor's operations for the periods identified on each such financial statement;

(e) Guarantor has not and will not, without the prior written consent of by BART sell, lease, assign, encumber, hypothecate, transfer or otherwise dispose of all or substantially all of Guarantor's assets; and

(f) Guarantor hereby waives any duty on the part of BART to disclose to Guarantor any facts BART may now or hereafter know about Developer, regardless of whether BART has reason to believe that any such facts materially increase the risk beyond that which Guarantor intends to assume or has reason to believe that such facts are unknown to Guarantor.

7.3 Until such time as this Guaranty shall have been terminated, Guarantor shall provide to BART, upon written request therefor from time to time, Guarantor's most recent audited financial statement.

8. Guaranty Independent; Waiver of Exoneration.

8.1 Guarantor agrees that the obligations hereunder are independent of and in addition to the undertakings of Developer pursuant to the Construction Documents, any deed of trust or security agreement given to secure the same, or any other guaranties given in connection with the Construction Documents. A separate action may be brought to enforce the provisions hereof whether Developer is a party in any such action or not. Guarantor waives any right to require BART to (a) proceed against Developer, (b) proceed against or exhaust any security held from Developer, or (c) pursue any remedy in BART's power whatsoever. Guarantor waives any defense arising by reason of any disability or other defense of Developer or by reason of the cessation from any cause whatsoever of the liability of Developer other than full discharge and

performance of the Obligations. Guarantor waives any defense it may acquire by reason of BART's election of any remedy against it or Developer or both, including, without limitation, election by BART to exercise its rights (including its rights under any power of sale set forth in a deed of trust), even though Guarantor's right of subrogation and reimbursement has been destroyed by the election of remedies. Guarantor waives any defense based upon lack of authority of the officers, directors, partners or agents acting or purporting to act on behalf of Developer or any principal of Developer or any defect in the formation of Developer or any principal of Developer. Guarantor waives any defense based upon BART's failure to disclose to Guarantor any information concerning Developer's financial condition or any other circumstances bearing on Developer's ability to pay and perform its obligations under the Construction Documents, any defense based upon any statute or rule of law which provides that the obligation of a surety must be neither larger in amount nor in any other respects more burdensome than that of a principal, any defense based on a statute of limitations claim, any defense based upon BART's election, in any proceeding instituted under the Federal Bankruptcy Code, of the application of Section 1111 (b)(2) of the Federal Bankruptcy Code or any successor statute; any defense based upon any borrowing or any grant of a security interest under Section 364 of the Federal Bankruptcy Code; and presentment, demand, protest and notice of any kind.

8.2 Until such date as this Guaranty is terminated, Guarantor hereby absolutely and irrevocably waives any and all (a) rights that it may have or may now or hereafter acquire by way of subrogation, reimbursement or indemnity against Developer by virtue of any payment made under this Guaranty or otherwise (including, without limitation, any payment made to Guarantor by Developer), and (b) other claims or rights against Developer relating to this Guaranty or the Obligations.

8.3 Guarantor hereby waives to the fullest extent permitted by law, all rights and benefits under Section 2809 of the California Civil Code purporting to reduce a guarantor's obligations in proportion to the principal obligation, and, without limiting the generality of the foregoing or any other provision hereof, all rights and benefits which might otherwise be available to Guarantor under California Civil Code Sections 2810, 2819, 2845, 2849, 2850, 2899, and 3433; California Civil Code Section 2839 (to the extent that an offer of performance exonerates a surety); and any defense based on any statutory or other limitation of the amount of any deficiency judgment available to BART after foreclosure or other proceedings to realize upon any such collateral security or guaranty shall not relieve Guarantor of any liability and shall not impair or affect the rights and remedies of BART against Guarantor.

8.4 In addition, Guarantor waives any other rights or defense that may be available to Guarantor under Civil Code Sections 2787 to 2856 inclusive and Civil Code Sections 2899 and 3433.

8.5 The obligations of Guarantor hereunder shall be in addition to any obligations of Guarantor under any other guaranties of obligations of Developer or any other persons or entities heretofore given or hereafter to be given to BART and this Guaranty shall not affect or invalidate any such other guaranties. The liability of Guarantor to BART and this Guaranty shall not affect or invalidate any such other guaranties. The liability of Guarantor to BART at all times shall be deemed to be the aggregate liability of Guarantor under the terms of this Guaranty and of any other guaranties heretofore or hereafter given by Guarantor to BART.

9. Miscellaneous.

9.1 This Guaranty shall be governed by and construed in accordance with the laws of the State of California.

9.2 Except as provided to the contrary herein, Guarantor waives all presentments, demands for performance, notices of nonperformance, protests, notices of protest, notices of dishonor and notices of acceptance of this Guaranty and of the existence, creation or incurring of all or any part of the obligations now existing or hereafter arising.

9.3 Time is of the essence in the performance and enforcement of the terms and conditions of this Guaranty.

9.4 If any term, provision, covenant or condition hereof or any application thereof should be held by a court of competent jurisdiction to be invalid, void or unenforceable, all terms, provisions, covenants and conditions hereof, and all applications thereof not held invalid, void or unenforceable shall continue in full force and effect and shall in no way be affected, impaired or invalidated thereby.

9.5 The undersigned assumes the responsibility for keeping informed of the financial condition of Developer and of all other circumstances bearing upon the risk of nonperformance by Developer of its Obligations that diligent inquiry would reveal.

9.6 BART, upon serving Developer with any notice of default under the provisions of or with respect to the Construction Agreement, shall also serve a copy of such notice upon Guarantor at the address provided in Section 15. In the event Developer is in default of any of the Obligations under the Construction Agreement, Guarantor shall have the right to remedy or cure such default or Event of Default, or cause the same to be cured or remedied within the period provided for Developer to cure such default or Event of Default and otherwise as provided in the Construction Agreement or in Section 3.1 of this Guaranty, and BART shall accept such performance by or at the instance of Guarantor in accordance with the Construction Agreement as if the same had been timely made by Developer.

10. Termination. This Guaranty, with respect to any of the Obligations, shall terminate upon final completion of construction of all of the Phase I Improvements by Developer lien-free in accordance with the Construction Documents, as more specifically set forth in Section 1.1 above.

11. Consent to Jurisdiction and Venue. Guarantor hereby irrevocably submits to the jurisdiction of the Superior Court of the State of California, County of Alameda, over any action or proceeding arising out of or relating in any way to this Guaranty, and Guarantor hereby irrevocably agrees that all claims in respect to any such action or proceeding may be heard and determined in such California state court.

12. No Release. Guarantor agrees that a sale, transfer or assignment by Developer of all or any portion of its interest in the Construction Documents shall not cause a release or reduction of, or otherwise impair the obligations of Guarantor under this Guaranty.

13. Enforceability. Guarantor hereby acknowledges that: (a) the obligations undertaken by Guarantor in this Guaranty are complex in nature, and (b) numerous possible defenses to the enforceability of these obligations may presently exist and/or may arise hereafter, and (c) as part of BART's consideration for entering into the Construction Documents, BART has specifically bargained for the waiver and relinquishment by Guarantor of the defenses waived in this Guaranty, and (d) Guarantor has had the opportunity to seek and receive legal advice from skilled legal counsel in the area of financial transactions of the type contemplated herein. Given all of the above, Guarantor does hereby represent and confirm to BART that Guarantor is fully informed regarding, and that Guarantor does thoroughly understand: (a) the nature of all such possible defenses, and (b) the circumstances under which such defenses may arise, and (c) the benefits which such defenses might confer upon Guarantor, and (d) the legal consequences to Guarantor of waiving such defenses. Guarantor acknowledges that Guarantor makes this Guaranty with the intent that this Guaranty and all of the informed waivers herein shall each and all be fully enforceable by BART, and that BART is induced to enter into the Construction Documents in material reliance upon the presumed full enforceability thereof.

14. No Assignment. Guarantor shall not assign or otherwise transfer its rights and obligations under this Guaranty.

15. Notice. If at any time after the execution of this Guaranty it shall become necessary or convenient for one of the parties to this Guaranty to serve any notice, demand or communication upon the other party, such notice, demand or communication shall be in writing and shall be served personally with delivery receipt, or dispatched by the certified United States mail, return receipt requested, postage prepaid, or reputable overnight service with a receipt showing the date of delivery and:

If intended for BART:

If intended for BART:

BART
300 Lakeshore Drive
Oakland, CA 94612

With a copy to:

Attn: Manager of Real Estate and Property Development
(16th Floor), and
Attn: Office of the General Counsel (23rd Floor)

If intended of Guarantor:

BRIDGE Housing Corporation

345 Spear Street, Suite 700
San Francisco, CA 94105
Attn: President

Notices shall be deemed received as follows on the date shown on the delivery receipt as the date of delivery, the date delivery was refused, or the date the item was returned as undeliverable. In the event that the date on the delivery receipt is not a business day, notice shall be deemed received on the following business day.

Any notice, demand or other communication under this Guaranty may be given on behalf of a party by the attorney for such party.

Such written notices, demands and communications may be sent in the same manner to such other addresses as the affected party may from time designate by notice as provided in this Section.

[No further text on this page.]

IN WITNESS WHEREOF, the undersigned has executed this Guaranty as of the day and year first above written.

GUARANTOR:

BRIDGE HOUSING CORPORATION, a California non-profit corporation

By: _____
Name:
Title:

EXHIBIT F

Final Garage Plans

The Final Plans for the Garage shall be based on Developer's 100% CD submittal, dated May 20, 2011 (the "100% CD Submittal"), and shall incorporate the following design features and changes:

1, BART's comments to the 100% CD Submittal.

2. 300 KW emergency generator, as shown on the 100% CD Submittal.

3. Second emergency exit, as shown on the 100% CD Submittal.

4. Separate retail core utility connections, as shown on the 100% CD Submittal.

5. Electrical grounding and SCADA system upgrades shown on the 100% CD Submittal.

6. Vehicle detection and "Garage Full" sign system by Clancy Systems International or its equivalent.

7. CCTV cameras, as shown on Addendum #1 to the 100% CD Submittal, dated September 7, 2011.

8. Plan revisions required to satisfy BART's Requests for Variance Nos. 19, 20, 21 and 22, each dated February 24, 2011, and BART's Request for Variance No. 23, dated March 2, 2011.

9. A $39,000 allowance for design and installation of an electrical conduit between the Garage emergency generator room and the BART station electrical room.

10. Cell tower infrastructure only as shown on the 100% CD Submittal.

EXHIBIT G

Garage Budget

Land Cost		
Motel Acquisition	$5,310,000	
Maintenance & Security Cost	$75,000	
Demolition	$200,000	
Land Subtotal	$5,585,000	
Hard Cost		
Contractor estimate w/adjustments	$14,200,000	GMAX budget w/subguard
Garage Contingency Fund (BART Control)	$545,000	$475,000 MTCP + $70,000 Access Fund
Contractor Contingency	$200,000	
MTCP Contingency	$426,000	3% of GMAX
Hard Cost Subtotal	$15,371,000	
Soft Cost		
A & E	$1,000,000	
BART Costs	$1,050,000	BART projection
City Fees (estimate)	$71,000	0.5% of GMAX
Utility Connection Fees & Permits (estimate)	$100,000	
Inspector of Record & Special Inspection	$355,000	2.5% of GMAX
Temporary Replacement Parking	$100,000	
Mitigation Measures & Other Soft Cost	$200,000	
P&P Bonds & Builders Risk Insurance	$155,000	
CM, Legal, Admin & Third-Party Mgmt Fees	$676,000	3% of GMAX plus $250,000
Development Management Fee	$1,233,150	5% of all costs
Soft Cost Subtotal	$4,940,150	
Total Budget	$25,896,150	

Notes

The project budgets reflect plans as of 7/1/11 and are subject to change as design progresses

Garage estimate includes adjustments in foundation, fire sprinkler, off-sites, and design

EXHIBIT H

Form of BART Permit to Enter

[Name]
[Address]

PERMIT NO. Z-000-1-?

PERMIT TO ENTER (WORK)

Subject to the following covenants, terms, conditions and restrictions, the San Francisco Bay Area Rapid Transit District (hereinafter "District" or "BART") hereby grants permission to [Name] (hereinafter "Permittee") (collectively, the "Parties") to [do something], (hereinafter the "Work") upon BART property located between [?] and [?] and in the City of [?], County of [?], (hereinafter "Premises"), as shown on Exhibit "A," attached hereto and incorporated herein by this reference.

This Permit is issued with respect to work to be performed by Permittee pursuant to the Design and Construction Agreement dated August __, 2011 between BART and Permittee (the "DCA").

1. Subject to Section 17 below, the term of this Permit shall commence on [?], 201-?, and end on [?], 201?, provided, however, that at any time during the term, the Permit may be terminated by either party upon thirty (30) days prior written notice to the other party. Said notice shall be sent certified mail, return receipt requested, to:

[Name]

[Address]
[Attn:]

or

Real Estate and Property Development Department
San Francisco Bay Area Rapid Transit District
300 Lakeside Drive, 22nd Floor
Oakland, California 94612
Attention: Jeffrey P. Ordway, Manager

The notice period shall begin to run upon receipt of said notice.

2. . Fees to reimburse BART for plan review and inspection will be payable by Permittee to the extent and in accordance with the provisions set forth in the DCA.

3. Permittee's right to use this area shall be non-exclusive and non-transferable, and shall be for the sole purpose of performing the Work. In no event shall BART's property be deemed to be a public right-of-way. Overnight parking is prohibited on BART's property.

4. Conditions of Use:

4.a, 4.b, 4.c, etc. (conditions specific for permitted use).

4. Permittee shall have Underground Service Alert and an independent utility locator service mark out the trench locations prior to digging.

4. Any change in the scope of this permit shall be subject to a separate amendment.

5. The cost of repair and any and all losses caused by Permittee's damage to any BART property or facility, or resultant loss of service, shall be at the sole expense of Permittee. Any damage to BART property or facilities shall be repaired or remedied by Permittee or BART, at BART's discretion, and at Permittee's sole cost and expense. Permittee agrees to reimburse BART promptly for any such damage.

6. Permittee shall have the duty and hereby agrees to exercise reasonable care to properly maintain BART's property pursuant to this Permit, including but not limited to, removing debris dumped or placed on the Premises during the term of this Permit, from any source, and to exercise reasonable care inspecting for and preventing any damage to any portion of BART's property.

7. Permittee acknowledges that said Work constitutes an encroachment upon BART's property and agrees to perform said Work in accordance with and subject to the provisions of this Permit, applicable provisions of the "General Terms and Conditions Relating to Utility Permits," attached hereto as Exhibit "B" and incorporated herein by reference, and all applicable state and local laws. Where there is a conflict between the provisions of this Permit and the "General Terms and Conditions Relating to Utility Permits," this Permit shall prevail.

8. Permittee agrees to notify BART's Construction Liaison, John Fu at (510) 464-6439, at least 14 calendar days prior to any use of the Premises. Should Permittee require any utility hook-ups, Permittee must obtain any and all necessary permits and pay all fees in connection therewith. Permittee shall not perform any work on BART property until all necessary permits, licenses and environmental clearances have been obtained.

9. Permittee shall not (a) use, generate, or store, or allow its employees, contractors or agents to use, generate, or store any Hazardous Materials on the Premises, except for those materials required to perform the Work permitted under this Permit and in compliance with all federal, state and local laws and regulations for the protection of the environment, human health and safety, as now in effect or hereafter amended (hereinafter "Environmental Laws"); or (b) release or dispose of, or allow its employees, contractors or agents to release or dispose of, any Hazardous Materials on the Premises. "Hazardous Materials" are those materials now or hereafter (a) defined as hazardous substances or hazardous wastes pursuant to the Comprehensive Environmental Response, Compensation and Liability Act (42 U.S.C. section 9601 et seq.) or the Resource Conservation and Recovery Act (42 U.S.C section 6901 et seq.); (b) listed in the Hazardous Substances List, Title 8, California Code of Regulations, G.I.S.O. Section 337-339, or those which meet the toxicity, reactivity, corrosivity or flammability criteria of the above Code; (c) characterized, regulated or subject to permitting or warning requirements as hazardous or toxic materials, substances, chemicals, pollutants, contaminants or wastes, or as materials for which removal, remediation or disposal is required, under any Environmental Laws; or (d) otherwise posing a present or potential hazard to human health, welfare or the environment.

10. BART shall at all times have the right to go upon and inspect the Premises and the operations conducted thereon to assure compliance with any of the requirements in this Permit. This inspection may include, but is not limited to, taking samples of substances and materials present for testing.

11. Permittee shall be responsible for and bear the entire cost of removal and disposal, in compliance with Environmental Laws, for all Hazardous Materials and non-hazardous wastes introduced to the Premises during Permittee's use and possession of the Premises. Permittee shall also be responsible for any remediation on or off the Premises necessitated by such Hazardous Materials or non-hazardous wastes. As used herein, "remediation" includes any investigation or post-cleanup monitoring that may be necessary in compliance with Environmental Laws. For purposes of disposal, Permittee shall be the generator of any such Hazardous Materials and shall provide a generator identification number on manifests for such disposal as required by Environmental Laws.

12. To the extent that any New Environmental Condition is caused by, or any Pre-existing Environmental Condition is contributed to or exacerbated by, Permittee's acts or omissions (including those of its employees, contractors and agents) during its use and possession of the Premises, Permittee shall, at BART's discretion, either (a) perform remediation of such New Environmental Condition or Pre-Existing Environmental Condition, at Permittee's cost and expense, in compliance with Environmental Laws and subject to the approval of a governmental agency with jurisdiction; or (b) indemnify BART against all costs incurred by BART in performing remediation of such New Environmental Condition or Pre-Existing Environmental Condition. A "New Environmental Condition" is defined as the release or threatened release of Hazardous Materials on, about, under or emanating from the Premises as of the commencement date of this Permit. A "Pre-Existing Environmental Condition" is defined as the release or threatened release of Hazardous Materials on, about, under or emanating from the Premises prior to the commencement date of this Permit.

13. Permittee agrees to assume responsibility and liability for, and defend, indemnify and hold harmless BART, its directors, officers, agents and employees from all claims, demands suits, losses, damages, injury, and liability, direct or indirect (including any and all costs, fees and expenses in connection therewith) arising from the introduction on the Premises of any Hazardous Materials or non-hazardous wastes by Permittee (including its employees, contractors and agents) or from any New Environmental Condition caused by, or any Pre-existing Environmental Condition contributed to or exacerbated by, the acts or omissions of Permittee (including those of its employees, contractors and agents) during its use and possession of the Premises.

14. Permittee's indemnity obligations to BART with respect to Permittee's entry of BART's property and the work performed pursuant to this Permit shall be as set forth in the DCA, which are incorporated herein by reference.

15. To the extent that a governmental agency with jurisdiction requires remediation of any Pre-Existing Environmental Condition that is discovered as a result of Permittee's activities pursuant to this Permit, and is not contributed to or exacerbated by the acts or omissions of Permittee, its employees, contractors or agents, Permittee shall, at BART's discretion, either (a) perform remediation of such Pre-Existing Environmental Condition, at Permittee's cost and expense, in compliance with Environmental Laws and subject to the approval of a governmental agency with jurisdiction; or (b) indemnify BART against all costs incurred by BART in performing remediation of such Pre-Existing Environmental Condition. Notwithstanding anything to the contrary in this Agreement, the provisions of Sections 12 (with respect to Pre-Existing Environmental Conditions only), 13 (with respect to Pre-Existing Environmental Conditions only) and 15 shall not apply with respect to any Pre-existing Environmental Condition or any required remediation thereof which occurs or is discovered in connection with the Plaza Improvements (as that term is defined in the DCA). Permittee's obligations in connection therewith or otherwise in connection with any remediation of Hazardous Materials in connection with the Plaza Improvements shall be governed by the DCA.

16. Permittee agrees that no easement, lease or other property right is acquired by Permittee through this Permit.

17. Upon any use of BART property by Permittee other than that authorized by this Permit, or upon failure of the Permittee to conform to any of the terms and conditions of this Permit, BART may terminate this Permit immediately.

18. Insurance shall be provided by Permittee as required pursuant to Section 5.02 of the DCA, which is incorporated herein by reference.

19. In the event of any conflict between the terms of this Permit and any exhibits thereto and the DCA, the DCA shall be controlling.

SAN FRANCISCO BAY AREA
RAPID TRANSIT DISTRICT

By_____ Date_____
Jeffrey P. Ordway, Manager
Real Estate and Property Development Department

ACCEPTED
Permittee

By_____ Date_____

Title_____

EXHIBIT I

List of Key Personnel

A. Developer's Key Personnel

1. Cynthia Parker
2. Joseph McCarthy
3. Arthur May
4. Robert Stevenson

B. BART's Key Personnel

1. James Gravesande, Group Manager
2. Paul Plecnik, Project Manager
3. Wendel Lewis, Inspector

EXHIBIT J

BART Cost Budget

					FY 2011							FY 2012															FY 2013													
MacArthur Garage		ITD	Budget	Total Cost	Mar	Apr	May	June	Hours	Rate	Budget	July	Aug	Sept	Oct	Nov	Dec	Jan	Feb	Mar	Apr	May	June	Hours	Rate	Budget	July	Aug	Sept	Oct	Nov	Dec	Jan	Feb	Mar	Apr	May	June	Hours	Rate	Budget
		as of 1/31/11																																						
Project Manager	Paul Plecnik		$268,936	$268,936	60	80	80	120	340	$110.00	$37,400	140	140	160	160	160	160	160	160	160	160	160	160	1,880	$112.20	$210,936	60	60	60										180	$114.44	$20,600
Inspector	Wendel Lewis	0	$180,686	$180,686	0	0	0	100	100	$75.00	$7,500	142	142	142	142	142	152	152	152	152	152	152	152	1,774	$76.50	$135,711	160	160	160										480	$78.03	$37,454
Group Manager	Jim Gravesande	0	$47,600	$47,600	10	20	30	40	100	$110.00	$11,000	25	25	25	25	25	20	20	20	20	20	20	20	265	$112.20	$29,733	20	20	20										60	$114.44	$6,867
RFV Coord/Architect	Jeff Garcia	2,513	$22,682	$25,195	60	40	40	40	180	$100.00	$18,000													0	$102.00	$0	15	15	15										45	$104.04	$4,682
Civil Engineer	P. Vatimas	3,613	$4,000	$7,613	10	10	10	10	40	$100.00	$4,000													0	$102.00	$0													0	$104.04	$0
Structural Engineer	V. Wu	6,013	$14,000	$20,013	50	30	30	30	140	$100.00	$14,000													0	$102.00	$0													0	$104.04	$0
Seismic Engineer	Tracy Johnson	1,961	$11,000	$12,961	40	20	20	20	100	$110.00	$11,000													0	$112.20	$0													0	$114.44	$0
Architect	T Feng	2,013	$1,600	$3,613	4	4	4	4	16	$100.00	$1,600													0	$102.00	$0													0	$104.04	$0
Mech/Elect Lead	Uppert/Zubair	1,013	$4,529	$5,542	10	10	10	10	40	$90.00	$3,600											2	2	4	$91.80	$367	2	2	2										6	$93.64	$562
Mechanical Engineer	B Smits	2,100	$12,492	$14,592	50	20	20	20	110	$90.00	$9,900											8	8	16	$91.80	$1,469	4	4	4										12	$93.64	$1,124
Electrical Engineer	M Gines	2,100	$12,492	$14,592	50	20	20	20	110	$90.00	$9,900											8	8	16	$91.80	$1,469	4	4	4										12	$93.64	$1,124
Vertical Trans Engineer	B.King/R.Cotton	2,100	$11,592	$13,692	40	20	20	20	100	$90.00	$9,000											8	8	16	$91.80	$1,469	4	4	4										12	$93.64	$1,124
Systems Lead	T. Herold	518	$10,607	$11,125	40	20	20	20	100	$91.00	$9,100											2	2	4	$92.82	$371	4	4	4										12	$94.68	$1,136
Comm Engineer	B. Burstrock	1,000	$11,721	$12,721	40	20	20	20	100	$91.00	$9,100											8	8	16	$92.82	$1,485	4	4	4										12	$94.68	$1,136
[illegible]gineer	J. Ho	1,000	$9,100	$10,100	40	20	20	20	100	$91.00	$9,100													0	$92.82	$0													0	$94.68	$0
Telephone Engineer	J. Kelley	500	$8,081	$8,581	30	10	10	10	60	$91.00	$5,460											8	8	16	$92.82	$1,485	4	4	4										12	$94.68	$1,136
CCTV Engineer	M McCormick	250	$8,081	$8,331	30	10	10	10	60	$91.00	$5,460											8	8	16	$92.82	$1,485	4	4	4										12	$94.68	$1,136
	Tech		$5,460	$5,460	30	10	10	10	60	$91.00	$5,460													0	$92.82	$0													0	$94.68	$0
Scada	D. Ellis	750	$8,081	$8,831	30	10	10	10	60	$91.00	$5,460											8	8	16	$92.82	$1,485	4	4	4										12	$94.68	$1,136
	Tech		$0	$0					0	$71.00	$0													0	$72.42	$0													0	$73.87	$0
Documentation	K Marshal		$2,974	$2,974			8	8	16	$63.00	$1,008													0	$64.26	$0	10	10	10										30	$65.55	$1,966
																								0															0		
Power/Mech Electricians	E. Cheves		$2,960	$2,960					0	$90.00	$0											10	10	20	$91.80	$1,836	4	4	4										12	$93.64	$1,124
Fire Alarm Engr/Tech	E.Yee/D.Gietl.		$2,960	$2,960					0	$90.00	$0											10	10	20	$91.80	$1,836	4	4	4										12	$93.64	$1,124
	Tech		$0	$0					0	$71.00	$0													0	$72.42	$0													0	$73.87	$0
																								0															0		
Operations	Monitors		$13,051	$13,051					0	$68.00	$0	10	10	10	10	10	20	20	20	20	20	20	20	190	$59.16	$11,240	10	10	10										30	$60.34	$1,810
																								0															0		
TSD Exe Management	6.4% of TSD inc Sta Grp Mgmt		$40,184	$40,184					35	$118.77	$4,105													251	$121.15	$30,395													46	$123.57	$5,694
																								0	$0.00	$0													0	$0.00	$0
TSD Project Controls	6.8% of TSD inc Sta Grp Mgmt		$32,353	$32,353					37	$90.00	$3,305													266	$91.80	$24,464													49	$93.64	$4,584
																								0															0		
ODC's	$1,750/Mo		$43,750	$43,750							$7,000													0		$21,000													0		$15,750
Customer Outreach	Potential Use		$6,000	$6,000							$1,000													0		$3,000													0		$2,000
TSD Comsumables	$200/Mo		$6,600	$6,600							$800													0		$2,400													0		$2,400
As-Builts/Cimage	Scanned Entry into CIMAGE		$7,500	$7,500							$0													0		$0													0		$7,500
																								0															0		
Subtotal		27,344	$810,053																					0															0		
Contingency 10%+Reserve			$263,360																					0															0		
[illegible]l		$27,344	$1,046,069	$1,046,069																				0															0		

MacArthur Sta. Plaza Renovation		ITD	Budget	Total Cost	FY 2011							FY 2012																FY 2013																
					Mar	Apr	May	June	Hours	Rate	Budget	July	Aug	Sept	Oct	Nov	Dec	Jan	Feb	Mar	Apr	May	June	Hours	Rate	Budget	July	Aug	Sept	Oct	Nov	Dec	Jan	Feb	Mar	Apr	May	June	Hours	Rate	Budget
		as of 1/31/11																																											
Project Manager	Paul Plecnik	0	$25,366	$25,366	20	40	50	80	200	$110.00	$22,000	10	10	10	0	0	0	0	0	0			0	30	$112.20	$3,366												0	$114.44	$0
Inspector	Wendel Lewis	0	$5,202	$5,202	0	0	0	0	0	$75.00	$0	8	8	8	8	8	4	4	4	4	4	4	4	68	$76.50	$5,202												0	$78.03	$0
Group Manager	Jim Grevesende	0	$12,907	$12,907	10	20	30	40	100	$110.00	$11,000	2	2	2	2	2	1	1	1	1	1	1	1	17	$112.20	$1,907												0	$114.44	$0
RFV Coord/Architect	Jen Gerde	0	$4,000	$4,000	10	10	10	10	40	$100.00	$4,000													0	$102.00	$0												0	$104.04	$0
Civil Engineer	P. Vallenas	0	$4,000	$4,000	10	10	10	10	40	$100.00	$4,000													0	$102.00	$0												0	$104.04	$0
Structural Engineer	V. Wu	0	$10,000	$10,000	40	30	20	10	100	$100.00	$10,000													0	$102.00	$0												0	$104.04	$0
Seismic Engineer	Tracy Johnson	0	$0	$0	0	0	0	0	0	$110.00	$0													0	$112.20	$0												0	$114.44	$0
Architect	T Feng	0	$1,600	$1,600	4	4	4	4	16	$100.00	$1,600													0	$102.00	$0												0	$104.04	$0
Mech/Elect Lead	Lippert/Zubair	0	$1,440	$1,440	4	4	4	4	16	$90.00	$1,440													0	$91.80	$0												0	$93.64	$0
Mechanical Engineer	B Smits	0	$7,963	$7,963	16	16	16	16	64	$90.00	$5,760	4	4	4	4	4	4							24	$91.80	$2,203												0	$93.64	$0
Electrical Engineer	M Gines	0	$16,603	$16,603	40	40	40	40	160	$90.00	$14,400	4	4	4	4	4	4							24	$91.80	$2,203												0	$93.64	$0
Vertical Trans Engineer	B. King/R. Cotton	0	$0	$0					0	$90.00	$0													0	$91.80	$0												0	$93.64	$0
Systems Lead	T. Herold	0	$2,570	$2,570	4	4	4	4	16	$91.00	$1,456				4	4	4							12	$92.82	$1,114												0	$94.68	$0
Comm Engineer	B. Buntrock	0	$5,868	$5,868	10	10	10	10	40	$91.00	$3,640				8	8	8							24	$92.82	$2,228												0	$94.68	$0
Comm Engineer	J. Ho	0	$0	$0	0	0	0	0	0	$91.00	$0													0	$92.82	$0												0	$94.68	$0
Telephone Engineer	J. Kelley	0	$0	$0	0	0	0	0	0	$91.00	$0													0	$92.82	$0												0	$94.68	$0
CCTV Engineer	M McCormick	0	$8,598	$8,598	20	20	20	10	70	$91.00	$6,370				8	8	8							24	$92.82	$2,228												0	$94.68	$0
	Tech		$0	$0	0	0	0	0	0	$91.00	$0													0	$92.82	$0												0	$94.68	$0
Scada	D. Ellis	0	$5,868	$5,868	10	10	10	10	40	$91.00	$3,640				8	8	8							24	$92.82	$2,228												0	$94.68	$0
	Tech		$0	$0					0	$71.00	$0													0	$72.42	$0												0	$73.87	$0
Documentation	K Marshal		$1,008	$1,008			8	8	16	$63.00	$1,008													0	$64.26	$0												0	$65.55	$0
																								0														0		
Power/Mech Electricians	E. Chevos		$2,203	$2,203					0	$90.00	$0				8	8	8							24	$91.80	$2,203												0	$93.64	$0
Fire Alarm Engr/Tech	E.Yoo/D.Giebl.		$0	$0	0	0	0	0	0	$90.00	$0													0	$91.80	$0												0	$93.64	$0
	Tech		$0	$0					0	$71.00	$0													0	$72.42	$0												0	$73.87	$0
																								0														0		
Operations	Monitors		$2,840	$2,840					0	$58.00	$0	8	8	8	8	8	8							48	$59.16	$2,840												0	$60.34	$0
																								0														0		
TSD Exe Management	6.4% of TSD inc Sta Grp Mgmt		$3,172	$3,172					19	$118.77	$2,280													7	$121.15	$892												0	$123.57	$0
																								0	$0.00	$0												0	$0.00	$0
TSD Project Controls	6.8% of TSD inc Sta Grp Mgmt		$2,554	$2,554					20	$90.00	$1,836													8	$91.80	$718												0	$93.64	$0
																								0														0		
ODC's	$250/Mo		$4,000	$4,000							$1,000													0		$3,000												0		$0
Customer Outreach	Potential Use		$3,000	$3,000							$2,000													0		$1,000												0		$0
TSD Consumables	$100/Mo		$1,600	$1,600							$400													0		$1,200												0		$0
As-Builts/Cimage	Scanned Entry into CIMAGE		$7,500	$7,500							$0													0		$0												0		$7,500
																								0														0		
Subtotal			$139,861																					0														0		
Contingency 10%+Reserve			$71,138																					0														0		
Total		$0	$211,000	$211,000																				0														0		

MacArt Sta.Frontage Road Re-build		ITD	Budget	Total Cost	FY 2011							FY 2012															FY 2013															
					Mar	Apr	May	June	Hours	Rate	Budget	July	Aug	Sept	Oct	Nov	Dec	Jan	Feb	Mar	Apr	May	June	Hours	Rate	Budget	July	Aug	Sept	Oct	Nov	Dec	Jan	Feb	Mar	Apr	May	June	Hours	Rate	Budget
		as of 1/31/11																																								
Project Manager	Paul Plecnik	0	$8,006	$8,006	0	8	8	8	24	$110.00	$2,640	10	10	10										30	$112.20	$3,366												0	$114.44	$0
Inspector	Wendel Lewis	0	$5,967	$5,967	0	0	0	0	0	$75.00	$0	10	10	10	10	10	4	4	4	4	4	4	4	78	$76.50	$5,967												0	$78.03	$0
Group Manager	Jim Gravesande	0	$3,227	$3,227	0	4	4	4	12	$110.00	$1,320	2	2	2	2	2	1	1	1	1	1	1	1	17	$112.20	$1,907												0	$114.44	$0
RFV Coord/Architect	Jeff Garda	0	$2,400	$2,400	0	8	8	8	24	$100.00	$2,400													0	$102.00	$0												0	$104.04	$0
Civil Engineer	P. Vallenas	0	$1,200	$1,200	0	4	4	4	12	$100.00	$1,200													0	$102.00	$0												0	$104.04	$0
Civil/Transportation Engineer	V. Wu/ Lim	0	$10,224	$10,224	0	40	30	20	90	$100.00	$9,000	4	4	4										12	$102.00	$1,224												0	$104.04	$0
Seismic Engineer	Tracy Johnson	0	$0	$0	0	0	0	0	0	$110.00	$0													0	$112.20	$0												0	$114.44	$0
Architect	T Feng	0	$600	$600	0	2	2	2	6	$100.00	$600													0	$102.00	$0												0	$104.04	$0
Mech/Elect Lead	Uppert/Zuesar	0	$2,160	$2,160	6	6	6	6	24	$90.00	$2,160													0	$91.80	$0												0	$93.64	$0
Mechanical Engineer	B Smes	0	$2,542	$2,542	4	4	4	4	16	$90.00	$1,440	4	4	4										12	$91.80	$1,102												0	$93.64	$0
Electrical Engineer	M Gines	0	$5,602	$5,602	0	20	20	10	50	$90.00	$4,500	4	4	4										12	$91.80	$1,102												0	$93.64	$0
Vertical Trans Engineer	B. King/R.Cotton	0	$0	$0					0	$90.00	$0													0	$91.80	$0												0	$93.64	$0
Systems Lead	T. Herold	0	$1,285	$1,285	2	2	2	2	8	$91.00	$728	2	2	2										6	$92.82	$557												0	$94.68	$0
Comm Engineer	B. Burbrock	0	$2,206	$2,206	0	4	4	4	12	$91.00	$1,092	4	4	4										12	$92.82	$1,114												0	$94.68	$0
Comm Engineer	J. Ho	0	$0	$0	0	0	0	0	0	$91.00	$0													0	$92.82	$0												0	$94.68	$0
Telephone Engineer	J. Kelley	0	$0	$0	0	0	0	0	0	$91.00	$0													0	$92.82	$0												0	$94.68	$0
CCTV Engineer	M McCormick	0	$6,778	$6,778	0	20	20	10	50	$91.00	$4,550	8	8	8										24	$92.82	$2,228												0	$94.68	$0
	Tech		$0	$0	0	0	0	0	0	$91.00	$0													0	$92.82	$0												0	$94.68	$0
[illegible]ads	D. Ellis	0	$3,844	$3,844	0	10	10	10	30	$91.00	$2,730	4	4	4										12	$92.82	$1,114												0	$94.68	$0
	Tech		$0	$0					0	$71.00	$0													0	$72.42	$0												0	$73.87	$0
Documentation	K Marshal		$1,008	$1,008	0		8	8	16	$63.00	$1,008													0	$64.26	$0												0	$65.55	$0
																								0														0		
Power/Mech Electricians	E. Chaves		$1,102	$1,102	0				0	$90.00	$0	4	4	4										12	$91.80	$1,102												0	$93.64	$0
Fire Alarm Engr/Tech	E.Yee/D.Gietl.		$0	$0	0	0	0	0	0	$90.00	$0													0	$91.80	$0												0	$93.64	$0
	Tech		$0	$0					0	$71.00	$0													0	$72.42	$0												0	$73.87	$0
																								0														0		
Operations	Monitors		$2,840	$2,840					0	$58.00	$0	8	8	8	8	8	8							48	$59.16	$2,840												0	$60.34	$0
																								0														0		
TSD Exe Management	6.4% of TSD inc Sta Grp Mgmt		$1,243	$1,243					2	$118.77	$274													8	$121.15	$969												0	$123.57	$0
																								0	$0.00	$0												0	$0.00	$0
TSD Project Controls	6.8% of TSD inc Sta Grp Mgmt		$1,001	$1,001					2	$90.00	$220													9	$91.80	$780												0	$93.64	$0
																								0														0		
ODC's	$100/Mo		$1,600	$1,600							$400													0		$1,200												0		$0
Customer Outreach	Potential Use		$3,000	$3,000							$2,000													0		$1,000												0		$0
TSD Consumables	$100/Mo		$1,600	$1,600							$400													0		$1,200												0		$0
As-Builts/Cimage	Scanned Entry Into CIMAGE		$7,500	$7,500							$0													0		$0												0		$7,500
																								0														0		
Subtotal		-	$74,933																					0														0		
Contingency 10%+Reserve			$45,043																					0														0		
Total		$0	$119,976	$119,976																				0														0		

EXHIBIT K

BART PI Cost Budget

Hard Cost		
Plaza Surface (inc Demo)	$470,000	
Plaza Bike Station & Trellis	$520,000	
Bus Shelters	$76,000	
Lighting & Elec	$150,000	
Wayfinding / Next Bus	$35,720	
Art relocation	$25,000	
PI Contingency (BART Control)	$100,000	
MTCP Contingency	$100,000	
Hard Cost Subtotal	$1,476,720	
Soft Cost		
A & E	$300,000	
BART Costs	$210,000	BART projection
CalTrans & City Fee (estimate)	$50,000	
Inspector of Record & Special Inspection	$50,000	
Bond & Insurance	$30,000	
Design & CM	$100,000	
Dev Mgt, Legal & Admin	$150,000	
Soft Cost Subtotal	$890,000	
Total Budget	$2,366,720	Total of all funding sources

Notes

The project budgets reflect plans as of 7/1/11 and are subject to change as design progresses
BART Plaza budget excludes separate Emery-go-Round's Next Bus grant
BART Plaza budget excludes separate RDA design fee grant

EXHIBIT L

BART TI Cost Budget

Hard Cost		
Engineer's Estimate	$1,058,399	Engineers Estimate + 25% less GCs
GC General Conditions	$158,760	15% of engineer's estimate
Joint Trench	$300,000	
TI Contingency (BART Control)	$50,000	
MTCP Contingency	$121,716	10% of engineer's estimate
Hard Cost Subtotal	$1,688,875	
Soft Cost (BART item only)		
A & E	$120,000	
BART Costs	$120,000	BART projection
City Fees (estimate)	$35,000	
CalTrans Fee (estimate)	$25,000	
Inspector of Record & Special Inspection	$50,000	
Bond & Insurance	$30,000	
Design & CM	$100,000	
Dev Mgt, Legal & Admin	$150,000	
Soft Cost Subtotal	$630,000	
Total Budget	$2,318,875	

Notes

The project budgets reflect plans as of 7/1/11 and are subject to change as design progresses

EXHIBIT P

CONTRACT FORM – AIA A101

The Standard Form of Agreement between Owner and Contractor, AIA Document A101 (Stipulated Sum), latest edition, as modified by Developer.

DRAFT AIA® Document A101™ – 2007

Standard Form of Agreement Between Owner and Contractor where the basis of payment is a Stipulated Sum

`AGREEMENT made as of the « » day of « » in the year « »
(In words, indicate day, month and year.)

BETWEEN the Owner:
(Name, legal status, address and other information)

MacArthur Transit Community Partners, LLC
~~345 Spear Street, Suite 700~~600 California Street, Suite 900
San Francisco, California 9410~~58~~
~~« »« »~~
~~« »~~
~~« »~~
~~« »~~

and the Contractor:
(Name, legal status, address and other information)

« »« »
« »
« »
« »

for the following Project:
(Name, location and detailed description)

«~~MacArthur Transit Village~~~~macarthur BART~~»MacArthur BARRT Plaza
« »
« »

The Architect:
(Name, legal status, address and other information)

«Sandis Civil Engineers »« »
« »
« »
« »

The Owner and Contractor agree as follows.

ADDITIONS AND DELETIONS: The author of this document has added information needed for its completion. The author may also have revised the text of the original AIA standard form. An *Additions and Deletions Report* that notes added information as well as revisions to the standard form text is available from the author and should be reviewed.

This document has important legal consequences. Consultation with an attorney is encouraged with respect to its completion or modification.

AIA Document A201™–2007, General Conditions of the Contract for Construction, is adopted in this document by reference. Do not use with other general conditions unless this document is modified.

ELECTRONIC COPYING of any portion of this AIA® Document to another electronic file is prohibited and constitutes a violation of copyright laws as set forth in the footer of this document.

AIA Document A101™ – 2007. Copyright © 1915, 1918, 1925, 1937, 1951, 1958, 1961, 1963, 1967, 1974, 1977, 1987, 1991, 1997 and 2007 by The American Institute of Architects. **All rights reserved. WARNING: This AIA® Document is protected by U.S. Copyright Law and International Treaties. Unauthorized reproduction or distribution of this AIA® Document, or any portion of it, may result in severe civil and criminal penalties, and will be prosecuted to the maximum extent possible under the law.** This draft was produced by AIA software at 09:11:13 on 06/01/2012 under Order No.1153948806_1 which expires on 12/06/2012, and is not for resale.
User Notes: (1967548517)

TABLE OF ARTICLES

1 THE CONTRACT DOCUMENTS

2 THE WORK OF THIS CONTRACT

3 DATE OF COMMENCEMENT AND SUBSTANTIAL COMPLETION

4 CONTRACT SUM

5 PAYMENTS

6 DISPUTE RESOLUTION

7 TERMINATION OR SUSPENSION

8 MISCELLANEOUS PROVISIONS

9 ENUMERATION OF CONTRACT DOCUMENTS

10 INSURANCE AND BONDS

ARTICLE 1 THE CONTRACT DOCUMENTS

The Contract Documents consist of this Agreement, Conditions of the Contract (General, Supplementary and other Conditions), Drawings, Specifications, Addenda issued prior to execution of this Agreement, other documents listed in this Agreement and Modifications issued after execution of this Agreement, all of which form the Contract, and are as fully a part of the Contract as if attached to this Agreement or repeated herein. The Contract represents the entire and integrated agreement between the parties hereto and supersedes prior negotiations, representations or agreements, either written or oral. An enumeration of the Contract Documents, other than a Modification, appears in Article 9.

ARTICLE 2 THE WORK OF THIS CONTRACT

The Contractor shall fully execute the Work described in the Contract Documents and reasonably inferable by the Contractor as necessary to produce the results intended by the Contract Documents, except as specifically indicated in the Contract Documents to be the responsibility of others.

ARTICLE 3 DATE OF COMMENCEMENT AND SUBSTANTIAL COMPLETION

§ 3.1 The date of commencement of the Work shall be the date ~~of this Agreement unless a different date is stated below or provision is made for the date to be~~ fixed in a written notice to proceed issued by the Owner.
(Insert the date of commencement if it differs from the date of this Agreement or, if applicable, state that the date will be fixed in a notice to proceed.)

« »

If, prior to the commencement of the Work, the Owner requires time to file mortgages and other security interests, the Owner's time requirement shall be as follows:

« »

§ 3.2 The Contract Time shall be measured from the date of commencement.

§ 3.3 The Contractor shall achieve Substantial Completion of the entire Work not later than « forty-nine » («49») calendar days from the date of commencement, or as follows:
(Insert number of calendar days. Alternatively, a calendar date may be used when coordinated with the date of commencement. If appropriate, insert requirements for earlier Substantial Completion of certain portions of the Work.)

« »

AIA Document A101™ – 2007. Copyright © 1915, 1918, 1925, 1937, 1951, 1958, 1961, 1963, 1967, 1974, 1977, 1987, 1991, 1997 and 2007 by The American Institute of Architects. **All rights reserved. WARNING: This AIA® Document is protected by U.S. Copyright Law and International Treaties. Unauthorized reproduction or distribution of this AIA® Document, or any portion of it, may result in severe civil and criminal penalties, and will be prosecuted to the maximum extent possible under the law.** This draft was produced by AIA software at 09:11:13 on 06/01/2012 under Order No.1153948806_1 which expires on 12/06/2012, and is not for resale.
User Notes: (1967548517)

Portion of Work	Substantial Completion Date

, subject to adjustments of this Contract Time as provided in the Contract Documents.
(Insert provisions, if any, for liquidated damages relating to failure to achieve Substantial Completion on time or for bonus payments for early completion of the Work.)

« »

§ 3.4 Liquidated Damages for Delay. Time is of the essence in the performance of this Contract. If the Contractor fails to reach Substantial Completion by the date required by Article 4 of this Agreement, the parties agree that the Owner would suffer damages related to the delay, but that such damages would be extremely difficult and impracticable to ascertain. The parties therefore agree that a reasonable estimate of the damages to be suffered by the Owner in the event of such a delay is ——————————One Thousand Dollars ($1,000——————) per day. The Contractor shall therefore pay to the Owner that amount for each calendar day during which Substantial Completion is delayed beyond the date for Substantial Completion required and as set forth in Article 4. Such payments are as liquidated damages and are not a penalty. Such liquidated damages are not in lieu of Contractor's indemnity obligations set forth separately in the Contract, nor shall these liquidated damages preclude the Owner from recovering its actual damages for any damages claimed by third parties even if arising out of the Contractor's delay.

ARTICLE 4 CONTRACT SUM
§ 4.1 The Owner shall pay the Contractor the Contract Sum in current funds for the Contractor's performance of the Contract. The Contract Sum shall be « » ($ « »), subject to additions and deductions as provided in the Contract Documents.

§ 4.2 The Contract Sum is based upon the following alternates, if any, which are described in the Contract Documents and are hereby accepted by the Owner:
(State the numbers or other identification of accepted alternates. If the bidding or proposal documents permit the Owner to accept other alternates subsequent to the execution of this Agreement, attach a schedule of such other alternates showing the amount for each and the date when that amount expires.)

« »

§ 4.3 Unit prices, if any:
(Identify and state the unit price; state quantity limitations, if any, to which the unit price will be applicable.)

Item	Units and Limitations	Price Per Unit ($0.00)

§ 4.4 Allowances included in the Contract Sum, if any:
(Identify allowance and state exclusions, if any, from the allowance price.)

Item	Price

ARTICLE 5 PAYMENTS
§ 5.1 PROGRESS PAYMENTS
§ 5.1.1 Based upon Applications for Payment, including all necessary supporting documentation, submitted to the Architect and the Owner by the Contractor and Certificates for Payment issued by the Architect and approved by the Owner, the Owner shall make progress payments on account of the Contract Sum to the Contractor as provided below and elsewhere in the Contract Documents.

§ 5.1.2 The period covered by each Application for Payment shall be one calendar month ending on the last day of the month, or as follows:

« »

AIA Document A101™ – 2007. Copyright © 1915, 1918, 1925, 1937, 1951, 1958, 1961, 1963, 1967, 1974, 1977, 1987, 1991, 1997 and 2007 by The American Institute of Architects. **All rights reserved. WARNING: This AIA® Document is protected by U.S. Copyright Law and International Treaties. Unauthorized reproduction or distribution of this AIA® Document, or any portion of it, may result in severe civil and criminal penalties, and will be prosecuted to the maximum extent possible under the law.** This draft was produced by AIA software at 09:11:13 on 06/01/2012 under Order No.1153948806_1 which expires on 12/06/2012, and is not for resale.
User Notes: (1967548517)

§ 5.1.3 Provided that an Application for Payment is received by the Architect and the Owner not later than the «first (1st) » day of a month and a Certificate for Payment ahs been approved by, the Owner and Architect, Owner shall make payment of the certified amount to the Contractor not later than the thirty (30) days after receipt of the Application for Payment. ~~« » day of the « » month~~. If an Application for Payment is received by the Owner ~~Architect~~ after the application date fixed above, payment shall be made by the Owner not later than thirty (30)~~« » (« »)~~ days after the Owner ~~Architect~~ receives the Application for Payment, provided such Application for Payment is approved.

(Federal, state or local laws may require payment within a certain period of time.)

§ 5.1.4 Each Application for Payment shall be based on the most recent schedule of values submitted by the Contractor in accordance with the Contract Documents. The schedule of values shall allocate the entire Contract Sum among the various portions of the Work. The schedule of values shall be prepared in such form and supported by such data to substantiate its accuracy as the Architect may require. This schedule, unless objected to by the Architect, shall be used as a basis for reviewing the Contractor's Applications for Payment.

§ 5.1.5 Applications for Payment shall show the percentage of completion of each portion of the Work as of the end of the period covered by the Application for Payment.

§ 5.1.6 Subject to other provisions of the Contract Documents, the amount of each progress payment shall be computed as follows:

.1 Take that portion of the Contract Sum properly allocable to completed Work as determined by multiplying the percentage completion of each portion of the Work by the share of the Contract Sum allocated to that portion of the Work in the schedule of values, less retainage of «ten » percent (« 10 » %). Pending final determination of cost to the Owner of changes in the Work, amounts not in dispute shall be included as provided in Section 7.3.9 of AIA Document A201™–2007, General Conditions of the Contract for Construction;

.2 Add that portion of the Contract Sum properly allocable to materials and equipment delivered and suitably stored at the site for subsequent incorporation in the completed construction (or, if approved in advance by the Owner, suitably stored off the site at a location agreed upon in writing), less retainage of « ten » percent («10 » %);

.3 Subtract the aggregate of previous payments made by the Owner; and

.4 Subtract amounts, if any, for which the Architect or Owner has withheld or nullified a Certificate for Payment as provided in Section 9.5 of AIA Document A201–2007, as amended , and other amounts properly held by Owner at the time of each Progress payment.

§ 5.1.7 The progress payment amount determined in accordance with Section 5.1.6 shall be further modified under the following circumstances:

.1 Add, upon Substantial Completion of the Work, a sum sufficient to increase the total payments to the full amount of the Contract Sum, less such amounts as the Architect shall determine for incomplete Work, retainage applicable to such work and unsettled claims; and
(Section 9.8.5 of AIA Document A201–2007 requires release of applicable retainage upon Substantial Completion of Work with consent of surety, if any.)

.2 Add, if final completion of the Work is thereafter materially delayed through no fault of the Contractor, any additional amounts payable in accordance with Section 9.10.3 of AIA Document A201–2007, as amended.

§ 5.1.8 Reduction or limitation of retainage, if any, shall be as follows:
(If it is intended, prior to Substantial Completion of the entire Work, to reduce or limit the retainage resulting from the percentages inserted in Sections 5.1.6.1 and 5.1.6.2 above, and this is not explained elsewhere in the Contract Documents, insert here provisions for such reduction or limitation.)

« »

§ 5.1.9 Except with the Owner's prior approval, the Contractor shall not make advance payments to suppliers for materials or equipment which have not been delivered and stored at the site.

Formatted: Superscript

AIA Document A101™ – 2007. Copyright © 1915, 1918, 1925, 1937, 1951, 1958, 1961, 1963, 1967, 1974, 1977, 1987, 1991, 1997 and 2007 by The American Institute of Architects. **All rights reserved. WARNING: This AIA® Document is protected by U.S. Copyright Law and International Treaties. Unauthorized reproduction or distribution of this AIA® Document, or any portion of it, may result in severe civil and criminal penalties, and will be prosecuted to the maximum extent possible under the law.** This draft was produced by AIA software at 09:11:13 on 06/01/2012 under Order No.1153948806_1 which expires on 12/06/2012, and is not for resale.
User Notes: (1967548517)

§ 5.1.10 The Owner shall have the option but not the obligation to reduce the retention requirements of the Contract or release any portion of retention prior to the date specified in the Contract. Any reduction or early release of retention agreed to by the Owner shall be conditioned upon execution by Contractor, in each instance of such a reduction or release, of a letter in the form of **Exhibit G** ~~***[conform exhibit number]***~~ hereto, whereby Contractor agrees to certain conditions and consideration for any such reduction or early release of retention. Exercise of this option by the Owner shall not be a waiver of any of the Owner's rights to retention in connection with other payments to the Contractor.

§ 5.2 FINAL PAYMENT

§ 5.2.1 Final payment, constituting the entire unpaid balance of the Contract Sum, shall be made by the Owner to the Contractor when

.1 the Contractor has fully performed the Contract except for the Contractor's responsibility to correct Work as provided in Section 12.2.2 of AIA Document A201–2007, and to satisfy other requirements, if any, which extend beyond final payment; and

.2 a final Certificate for Payment has been issued by the Architect.

.3 all conditions set forth in Section 9.1.2. of AIA Document A201-2007, as modified by Addendum to AIA Document A201-2007, have been satisfied.

.4 Contractor has: (a) executed the final payment and final release of retention letter in the form of the letter attached as Exhibit H ~~***[conform exhibit number]***~~ hereto whereby Contractor agrees to certain conditions and consideration for payment of the final payment and final release of retention and (b) delivered to Owner an AIA Form G707 ("Consent of Surety to Final Payment") executed by the surety

Formatted: AIA Body Text Indented

§ 5.2.2 The Owner's final payment to the Contractor shall be made no later than 30 days after the issuance of the Architect's final Certificate for Payment, or as follows:

« »

ARTICLE 6 DISPUTE RESOLUTION

§ 6.~~1 INITIAL DECISION MAKER~~ INTENTIONALLY OMITTED

~~The Architect will serve as Initial Decision Maker pursuant to Section 15.2 of AIA Document A201–2007, unless the parties appoint below another individual, not a party to this Agreement, to serve as Initial Decision Maker.~~

~~*(If the parties mutually agree, insert the name, address and other contact information of the Initial Decision Maker, if other than the Architect.)*~~

« »
« »
« »
« »

§ 6.2 BINDING DISPUTE RESOLUTION

For any Claim ~~subject to, but~~ not otherwise resolved by the parties, ~~, mediation pursuant to Section 15.3 of AIA Document A201–2007~~, the method of binding dispute resolution shall be as follows:

(Check the appropriate box. If the Owner and Contractor do not select a method of binding dispute resolution below, or do not subsequently agree in writing to a binding dispute resolution method other than litigation, Claims will be resolved by litigation in a court of competent jurisdiction.)

[«X»] Arbitration pursuant to Section 15.4 of AIA Document A201–2007, and subject to the limitations set forth therein.

[« »] Litigation in a court of competent jurisdiction

[« »] Other *(Specify)*

« »

AIA Document A101™ – 2007. Copyright © 1915, 1918, 1925, 1937, 1951, 1958, 1961, 1963, 1967, 1974, 1977, 1987, 1991, 1997 and 2007 by The American Institute of Architects. **All rights reserved. WARNING: This AIA® Document is protected by U.S. Copyright Law and International Treaties. Unauthorized reproduction or distribution of this AIA® Document, or any portion of it, may result in severe civil and criminal penalties, and will be prosecuted to the maximum extent possible under the law.** This draft was produced by AIA software at 09:11:13 on 06/01/2012 under Order No.1153948806_1 which expires on 12/06/2012, and is not for resale.
User Notes: (1967548517)

ARTICLE 7 TERMINATION OR SUSPENSION

§ 7.1 The Contract may be terminated by the Owner or the Contractor as provided in Article 14 of AIA Document A201–2007.

§ 7.2 The Work may be suspended by the Owner as provided in Article 14 of AIA Document A201–2007.

ARTICLE 8 MISCELLANEOUS PROVISIONS

§ 8.1 Where reference is made in this Agreement to a provision of AIA Document A201–2007 or another Contract Document, the reference refers to that provision as amended or supplemented by other provisions of the Contract Documents.

§ 8.2 Payments due and unpaid under the Contract shall bear interest from the date payment is due at the rate stated below, or in the absence thereof, at the legal rate prevailing from time to time at the place where the Project is located.
(Insert rate of interest agreed upon, if any.)

« » % « »

§ 8.3 The Owner's representative:
(Name, address and other information)

Adhi Nagraj
345 Spear Street, 7th Floor
San Francisco, CA 94105«»
«»
«»
«»
«»
«»

Formatted: Superscript

§ 8.4 The Contractor's representative:
(Name, address and other information)

« »
« »
« »
« »
« »
« »

§ 8.5 Neither the Owner's nor the Contractor's representative shall be changed without ten days written notice to the other party.

§ 8.6 Other provisions:

« **§ 8.6.1 Contractor Representations.** The Contractor represents and warrants the following to the Owner (in addition to any other representations and warranties contained in the Contract Documents) as a material inducement to the Owner to execute this Agreement, which representations and warranties shall survive the execution and delivery of this Agreement and any termination of this Agreement:

.1 The Contractor and its Subcontractors are financially solvent, able to pay all debts as they mature, and possessed of sufficient working capital to complete the Work and perform all obligations hereunder;

.2 The Contractor is able to furnish the plant, tools, materials, supplies, equipment, and labor itself or through its Subcontractors required to complete the Work and perform its obligations hereunder, and has sufficient experience and competence to do so;

AIA Document A101™ – 2007. Copyright © 1915, 1918, 1925, 1937, 1951, 1958, 1961, 1963, 1967, 1974, 1977, 1987, 1991, 1997 and 2007 by The American Institute of Architects. **All rights reserved. WARNING: This AIA® Document is protected by U.S. Copyright Law and International Treaties. Unauthorized reproduction or distribution of this AIA® Document, or any portion of it, may result in severe civil and criminal penalties, and will be prosecuted to the maximum extent possible under the law.** This draft was produced by AIA software at 09:11:13 on 06/01/2012 under Order No.1153948806_1 which expires on 12/06/2012, and is not for resale.
User Notes: (1967548517)

.3 The Contractor is authorized to do business in the State of California and is properly licensed by all necessary governmental and public and quasi-public authorities having jurisdiction over the Contractor and over the Work and the Project;

.4 The Contractor's execution of this Agreement and performance thereof is within the Contractor's duly authorized powers; and

.5 The Contractor is a sophisticated contractor who possesses a high level of experience and expertise in the business administration, construction, construction management, and superintendence of projects of the size, complexity, and nature of this particular Project, and will perform the Work with the care, skill, and diligence of such a Contractor

§ 8.6.2 Certain Third Party Requirements. The Contractor acknowledges that the Owner is financing the Work with grants from public and/or private funders, including the California Department of Housing and Community Development and the Oakland Redevelopment Agency or its successor agency ("Funders") and that such Funders have imposed and may impose additional requirements on the Owner, the Contractor, and any Subcontractors including but not limited to approval prior to release of any payments under the Contract including Progress Payments, Final Payments and payment of retention; however, such approvals shall not delay payments to Contractor pursuant to Section 12.1.3. Applicable requirements of such Funders are set forth in **Exhibits E and M** to this Agreement and are incorporated into the Agreement. In addition, Owner has entered into a Design and Construction Agreement with the San Francisco Bay Area Rapid Transit District ("BART"), a copy of which is attached hereto in Exhibits N (the "DCA") and incorporated into this Agreement. The DCA imposes certain requirements of BART in connection with the Work. The Contractor agrees to use its best efforts to comply with the requirements of the Funders and BART that bear upon the performance of the Work. The Contractor shall also: (1) make the site of the Work available at reasonable times for inspection by the Funders and BART or their respective representatives; (2) consent to and execute all documents reasonably requested by the Owner in connection with the assignment of the Contract Documents to the Funders or BART for collateral purposes; and (3) promptly furnish the Owner with information, documents, and materials that the Owner may reasonably request from time to time in order to comply with the requirements of the Funders and BART including but not limited to information necessary to process payments.

§8.6.3 Performance and Payment Bonds. The Contractor shall be required to furnish a Performance Bond and a Labor and Material (Payment) Bond, each bond to be in the amount of 100% of the Contract Sum as security for the faithful performance and payment of all obligations under the Contract Documents, and as further set forth in Section 11.4.1 of AIA Document A201-2007 as modified by Owner. The bonds shall be in recordable form and shall name MacArthur Transit Community Partners, LLC, San Francisco Bay Area Rapid Transit District, City of Oakland acting as Successor Agency to the Oakland Redevelopment Agency, and State of California Department of Housing and Community Development as co-obligees or assignees.

§ 8.6.4 Project Labor Agreement; Davis Bacon; Prevailing Wages.

Contractor shall comply with the Project Labor Agreement attached hereto as Exhibit P and shall cause its subcontractors to comply therewith.

Davis Bacon Act Requirements. Except to the extent that higher wages must be paid pursuant to the Project Labor Agreement, this Project shall be constructed in compliance with the prevailing wage requirements of the federal Davis-Bacon Act and in accordance with the wage rate determination attached as **Exhibit I**. The Contractor shall indemnify, hold harmless and defend (with counsel reasonably acceptable to the Owner) the Owner against any claim for damages, compensation, fines, penalties or other amounts to the extent arising out of the failure or alleged failure of any person or entity (including the subcontractors) to pay prevailing wages as determined pursuant to the prevailing wage provisions of the federal Davis-Bacon Act and implementing rules and regulations in connection with the construction of the Project or any other work undertaken or in connection with the Project.

Prevailing Wage Requirements. Except to the extent higher wages must be paid pursuant to the Project Labor Agreement or Davis Bacon Requirements, the Contractor shall and shall cause Subcontractors to pay prevailing wages in the construction of the Project as those wages are determined as called out in Exhibits E and M and pursuant to Labor Code Sections 1720 et seq., to employ apprentices as required by Labor Code Sections 1777.5 et seq., and the implementing regulations of the Department of Industrial Relations and comply with the other

Formatted: Font: Bold

Formatted: Font: Bold

AIA Document A101™ – 2007. Copyright © 1915, 1918, 1925, 1937, 1951, 1958, 1961, 1963, 1967, 1974, 1977, 1987, 1991, 1997 and 2007 by The American Institute of Architects. **All rights reserved. WARNING: This AIA® Document is protected by U.S. Copyright Law and International Treaties. Unauthorized reproduction or distribution of this AIA® Document, or any portion of it, may result in severe civil and criminal penalties, and will be prosecuted to the maximum extent possible under the law.** This draft was produced by AIA software at 09:11:13 on 06/01/2012 under Order No.1153948806_1 which expires on 12/06/2012, and is not for resale.
User Notes: (1967548517)

applicable provisions of Labor Code Sections 1720 et seq., 1777.5 et seq., and implementing regulations of the Department of Industrial Relations. The Contractor shall and shall cause the Subcontractors to keep and retain such records as are necessary to determine if such prevailing wages have been paid as required pursuant to Labor Code Sections 1720 et seq., and apprentices have been employed as required by Labor Code Sections 1777.5 et seq. Copies of the currently applicable current per diem prevailing wages are available from the California Department of Industrial Relations website, www.dir.ca.gov. During the construction of the Project, Contractor shall post at the property the applicable prevailing rates of per diem wages. Contractor shall indemnify, hold harmless and defend (with counsel reasonably acceptable to the Owner) the Owner against any claim for damages, compensation, fines, penalties or other amounts arising out of the failure or alleged failure of any person or entity (including Contractor and Subcontractors) to comply with the Project Labor Agreement, or to pay prevailing wages as determined pursuant to Labor Code Sections 1720 et seq., to employ apprentices pursuant to Labor Code Sections 1777.5 et seq., and implementing regulation or comply with the other applicable provisions of Labor Code Sections 1720 et seq., 1777.5 et seq., and implementing regulations of the Department of Industrial Relations in connection with construction of the Project or any other work undertaken or in connection with the property.

Contractor, shall, if requested by Owner, provide to Owner, BART or the Funders documentation evidencing the compliance with the Project Labor Agreement or compliance with the Davis Bacon Act, or the proper payment of prevailing wages and maintenance of labor records as required by the applicable requirements.

§ 8.6.5 Conditions of Approval/Mitigation Measures. Contractor shall comply with the Conditions of Approval/Mitigation Requirements set forth in **Exhibits I and J.**

§ 8.6.6 Entire Agreement. This Contract and it exhibits set forth the entire understanding between the parties. The parties to this Contract have read and reviewed this Contract and agree that any rule of construction to the effect that ambiguities are to be resolved against the drafting party (including but not limited to Civil Code Section 1654) shall not apply to this Contract.

Formatted: Font: Bold

§ 8.6.7 Counterparts. This Agreement may be executed in one or more counterparts, each of which shall be deemed to be an original, but all of which together shall constitute but one and the same instrument.

§ 15.6.8 Role "Architect". The parties acknowledge that due to the nature of the Work, there is no project "Architect". The functions of Architect as provided in this Agreement may be provided or not provided, at Owner's election, and if provided, may be provided at Owner's election by Owner or Owner's representatives, or by Engineer. However, in no event shall Owner or its representatives provide any professional design function or be deemed to assume any professional liability hereunder and in no event shall Owner, its representatives or Engineer perform any activity which is required by law to be performed by a licensed architect.
»

ARTICLE 9 ENUMERATION OF CONTRACT DOCUMENTS

§ 9.1 The Contract Documents, except for Modifications issued after execution of this Agreement, are enumerated in the sections below.

§ 9.1.1 The Agreement is this executed AIA Document A101–2007, Standard Form of Agreement Between Owner and Contractor.

§ 9.1.2 The General Conditions are AIA Document A201–2007, General Conditions of the Contract for Construction, as amended..

§ 9.1.3 The Supplementary and other Conditions of the Contract:

Document	Title	Date	Pages

§ 9.1.4 The Specifications:
(Either list the Specifications here or refer to an exhibit attached to this Agreement.)
« »

AIA Document A101™ – 2007. Copyright © 1915, 1918, 1925, 1937, 1951, 1958, 1961, 1963, 1967, 1974, 1977, 1987, 1991, 1997 and 2007 by The American Institute of Architects. **All rights reserved. WARNING: This AIA® Document is protected by U.S. Copyright Law and International Treaties. Unauthorized reproduction or distribution of this AIA® Document, or any portion of it, may result in severe civil and criminal penalties, and will be prosecuted to the maximum extent possible under the law.** This draft was produced by AIA software at 09:11:13 on 06/01/2012 under Order No.1153948806_1 which expires on 12/06/2012, and is not for resale.
User Notes: (1967548517)

Section	Title	Date	Pages

§ 9.1.5 The Drawings:
(Either list the Drawings here or refer to an exhibit attached to this Agreement.)
« »

Number	Title	Date

§ 9.1.6 The Addenda, if any:

Number	Date	Pages

Portions of Addenda relating to bidding requirements are not part of the Contract Documents unless the bidding requirements are also enumerated in this Article 9.

§ 9.1.7 Additional documents, if any, forming part of the Contract Documents:

.1 AIA Document E201™–2007, Digital Data Protocol Exhibit, if completed by the parties, or the following:

« »

.2 Other documents, if any, listed below:
(List here any additional documents that are intended to form part of the Contract Documents. AIA Document A201–2007 provides that bidding requirements such as advertisement or invitation to bid, Instructions to Bidders, sample forms and the Contractor's bid are not part of the Contract Documents unless enumerated in this Agreement. They should be listed here only if intended to be part of the Contract Documents.)

« Exhibit A: Contractor's Schedule of Values
Exhibit B: Contractor's Qualifications and Exclusions
Exhibit C: Construction Schedule
Exhibit D: Owner's Insurance Requirements (OPA, HCD, BART, MTCP)
Exhibit E: HCD Requirements
Exhibit F: Drawings and Specifications
Exhibit G: Early Release or Reduction of Retention Form Letter
Exhibit H: Final Payment & Release of Retention Form Letter
Exhibit I: Conditions of Approval ~~(Items that pertain to Site Development Stage B construction activities only)~~
Exhibit J: Mitigation Monitoring & Reporting Program ~~(Items that pertain to Site Development Stage B construction activities only)~~
Exhibit K: ~~City of Oakland Redevelopment Agency Construction Contract Addendum~~INENTIONALLY DELETED
Exhibit L: City of Oakland LBE/SLBE & Local Employment Program
Exhibit M City of Oakland Redevelopment Agency Owner Participation Agreement (Selected Sections)
Exhibit N BART Design Construction Agreement ~~(Items that pertain to Site Development Stage B activities only in sections I - Definitions and Exhibits, II - Design and Construction of the Site Development Stage B, V - Provisions applicable to all construction , and VI - General Provisions)~~
Exhibit O BART Permit to Enter
Exhibit P Project Labor Agreement
Exhibit Q Application for Payment
Exhibit R Lien Release Forms »

Formatted: Font: Not Bold, Pattern: Clear (Gray-25%)
Formatted: Indent: Left: 0.83", Tab stops: 0.5", Left
Formatted: Font: Not Bold, Pattern: Clear (Gray-25%)

AIA Document A101™ – 2007. Copyright © 1915, 1918, 1925, 1937, 1951, 1958, 1961, 1963, 1967, 1974, 1977, 1987, 1991, 1997 and 2007 by The American Institute of Architects. **All rights reserved. WARNING: This AIA® Document is protected by U.S. Copyright Law and International Treaties. Unauthorized reproduction or distribution of this AIA® Document, or any portion of it, may result in severe civil and criminal penalties, and will be prosecuted to the maximum extent possible under the law.** This draft was produced by AIA software at 09:11:13 on 06/01/2012 under Order No.1153948806_1 which expires on 12/06/2012, and is not for resale.
User Notes: (1967548517)

ARTICLE 10 INSURANCE AND BONDS

The Contractor shall purchase and maintain insurance and provide bonds as set forth in Article 11 of AIA Document A201–2007.

(State bonding requirements, if any, and limits of liability for insurance required in Article 11 of AIA Document A201–2007.)

Type of insurance or bond	Limit of liability or bond amount ($0.00)

This Agreement entered into as of the day and year first written above.

OWNER *(Signature)*	CONTRACTOR *(Signature)*
« »« »	« »« »
(Printed name and title)	*(Printed name and title)*

DRAFT

AIA Document A101™ – 2007. Copyright © 1915, 1918, 1925, 1937, 1951, 1958, 1961, 1963, 1967, 1974, 1977, 1987, 1991, 1997 and 2007 by The American Institute of Architects. **All rights reserved. WARNING: This AIA® Document is protected by U.S. Copyright Law and International Treaties. Unauthorized reproduction or distribution of this AIA® Document, or any portion of it, may result in severe civil and criminal penalties, and will be prosecuted to the maximum extent possible under the law.** This draft was produced by AIA software at 09:11:13 on 06/01/2012 under Order No.1153948806_1 which expires on 12/06/2012, and is not for resale.
User Notes: (1967548517)

EXHIBIT Q

GENERAL CONDITIONS FORM – AIA A201

The Standard Form of General Conditions between Owner and Contractor, AIA Document A201, latest edition, as modified by Developer.

DRAFT

AIA® Document A201™ – 2007

General Conditions of the Contract for Construction

for the following PROJECT:
(Name and location or address)
BRIDGE TEMPLATE (Non-Homeownership)

THE OWNER:
(Name and address)
~~345 Spear Street, Suite 700~~600California Street, Suite 900
San Francisco, California 94~~105~~108

THE ARCHITECT:
(Name and address)

TABLE OF ARTICLES

1 GENERAL PROVISIONS

2 OWNER

3 CONTRACTOR

4 ARCHITECT

5 SUBCONTRACTORS

6 CONSTRUCTION BY OWNER OR BY SEPARATE CONTRACTORS

7 CHANGES IN THE WORK

8 TIME

9 PAYMENTS AND COMPLETION

10 PROTECTION OF PERSONS AND PROPERTY

11 INSURANCE AND BONDS

12 UNCOVERING AND CORRECTION OF WORK

13 MISCELLANEOUS PROVISIONS

14 TERMINATION OR SUSPENSION OF THE CONTRACT

15 CLAIMS AND DISPUTES

ADDITIONS AND DELETIONS:
The author of this document has added information needed for its completion. The author may also have revised the text of the original AIA standard form. An *Additions and Deletions Report* that notes added information as well as revisions to the standard form text is available from the author and should be reviewed.

This document has important legal consequences. Consultation with an attorney is encouraged with respect to its completion or modification.

DRAFT

ELECTRONIC COPYING of any portion of this AIA® Document to another electronic file is prohibited and constitutes a violation of copyright laws as set forth in the footer of this document.

AIA Document A201™ – 2007. Copyright © 1911, 1915, 1918, 1925, 1937, 1951, 1958, 1961, 1963, 1966, 1970, 1976, 1987, 1997 and 2007 by The American Institute of Architects. **All rights reserved. WARNING: This AIA® Document is protected by U.S. Copyright Law and International Treaties. Unauthorized reproduction or distribution of this AIA® Document, or any portion of it, may result in severe civil and criminal penalties, and will be prosecuted to the maximum extent possible under the law.** This draft was produced by AIA software at 12:33:47 on 05/14/2009 under Order No.1000392252_1 which expires on 4/23/2010, and is not for resale.
User Notes: BRIDGE A201 Non-Homeownership (6-18-09) (6) (1111997498)

INDEX
(Numbers and Topics in Bold are Section Headings)

Acceptance of Nonconforming Work
9.6.6, 9.9.3, **12.3**
Acceptance of Work
9.6.6, 9.8.2, 9.9.3, 9.10.1, 9.10.3, 12.3
Access to Work
3.16, 6.2.1, 12.1
Accident Prevention
10
Acts and Omissions
3.2, 3.3.2, 3.12.8, 3.18, 4.2.3, 8.3.1, 9.5.1, 10.2.5, 10.2.8, 13.4.2, 13.7.1, 14.1, 15.2
Addenda
1.1.1, 3.11.1
Additional Costs, Claims for
3.7.4, 3.7.5, 6.1.1, 7.3.7.5, 10.3, 15.1.4
Additional Inspections and Testing
9.4.2, 9.8.3, 12.2.1, **13.5**
Additional Insured
11.1.4
Additional Time, Claims for
3.2.4, 3.7.4, 3.7.5, 3.10.2, 8.3.2, **15.1.5**
Administration of the Contract
3.1.3, **4.2**, 9.4, 9.5
Advertisement or Invitation to Bid
1.1.1
Aesthetic Effect
4.2.13
Allowances
3.8, 7.3.8
All-risk Insurance
11.3.1, 11.3.1.1
Applications for Payment
4.2.5, 7.3.9, 9.2, **9.3**, 9.4, 9.5.1, 9.6.3, 9.7.1, 9.10, 11.1.3
Approvals
2.1.1, 2.2.2, 2.4, 3.1.3, 3.10.2, 3.12.8, 3.12.9, 3.12.10, 4.2.7, 9.3.2, 13.5.1
Arbitration
8.3.1, 11.3.10, 13.1.1, 15.3.2, **15.4**
ARCHITECT
4
Architect, Definition of
4.1.1
Architect, Extent of Authority
2.4.1, 3.12.7, 4.1, 4.2, 5.2, 6.3.1, 7.1.2, 7.3.7, 7.4, 9.2.1, 9.3.1, 9.4, 9.5, 9.6.3, 9.8, 9.10.1, 9.10.3, 12.1, 12.2.1, 13.5.1, 13.5.2, 14.2.2, 14.2.4, 15.1.3, 15.2.1
Architect, Limitations of Authority and Responsibility
2.1.1, 3.12.4, 3.12.8, 3.12.10, 4.1.2, 4.2.1, 4.2.2, 4.2.3, 4.2.6, 4.2.7, 4.2.10, 4.2.12, 4.2.13, 5.2.1, 7.4.1, 9.4.2, 9.5.3, 9.6.4, 15.1.3, 15.2
Architect's Additional Services and Expenses
2.4.1, 11.3.1.1, 12.2.1, 13.5.2, 13.5.3, 14.2.4
Architect's Administration of the Contract
3.1.3, 4.2, 3.7.4, 15.2, 9.4.1, 9.5
Architect's Approvals
2.4.1, 3.1.3, 3.5.1, 3.10.2, 4.2.7
Architect's Authority to Reject Work
3.5.1, 4.2.6, 12.1.2, 12.2.1
Architect's Copyright
1.1.7, 1.5
Architect's Decisions
3.7.4, 4.2.6, 4.2.7, 4.2.11, 4.2.12, 4.2.13, 4.2.14, 6.3.1, 7.3.7, 7.3.9, 8.1.3, 8.3.1, 9.2.1, 9.4.1, 9.5, 9.8.4, 9.9.1, 13.5.2, 15.2, 15.3
Architect's Inspections
3.7.4, 4.2.2, 4.2.9, 9.4.2, 9.8.3, 9.9.2, 9.10.1, 13.5
Architect's Instructions
3.2.4, 3.3.1, 4.2.6, 4.2.7, 13.5.2
Architect's Interpretations
4.2.11, 4.2.12
Architect's Project Representative
4.2.10
Architect's Relationship with Contractor
1.1.2, 1.5, 3.1.3, 3.2.2, 3.2.3, 3.2.4, 3.3.1, 3.4.2, 3.5.1, 3.7.4, 3.7.5, 3.9.2, 3.9.3, 3.10, 3.11, 3.12, 3.16, 3.18, 4.1.2, 4.1.3, 4.2, 5.2, 6.2.2, 7, 8.3.1, 9.2, 9.3, 9.4, 9.5, 9.7, 9.8, 9.9, 10.2.6, 10.3, 11.3.7, 12, 13.4.2, 13.5, 15.2
Architect's Relationship with Subcontractors
1.1.2, 4.2.3, 4.2.4, 4.2.6, 9.6.3, 9.6.4, 11.3.7
Architect's Representations
9.4.2, 9.5.1, 9.10.1
Architect's Site Visits
3.7.4, 4.2.2, 4.2.9, 9.4.2, 9.5.1, 9.9.2, 9.10.1, 13.5
Asbestos
10.3.1
Attorneys' Fees
3.18.1, 9.10.2, 10.3.3
Award of Separate Contracts
6.1.1, 6.1.2
Award of Subcontracts and Other Contracts for Portions of the Work
5.2
Basic Definitions
1.1
Bidding Requirements
1.1.1, 5.2.1, 11.4.1
Binding Dispute Resolution
9.7.1, 11.3.9, 11.3.10, 13.1.1, 15.2.5, 15.2.6.1, 15.3.1, 15.3.2, 15.4.1
Boiler and Machinery Insurance
11.3.2
Bonds, Lien
7.3.7.4, 9.10.2, 9.10.3
Bonds, Performance, and Payment
7.3.7.4, 9.6.7, 9.10.3, 11.3.9, **11.4**

AIA Document A201™ – 2007. Copyright © 1911, 1915, 1918, 1925, 1937, 1951, 1958, 1961, 1963, 1966, 1970, 1976, 1987, 1997 and 2007 by The American Institute of Architects. **All rights reserved. WARNING: This AIA® Document is protected by U.S. Copyright Law and International Treaties. Unauthorized reproduction or distribution of this AIA® Document, or any portion of it, may result in severe civil and criminal penalties, and will be prosecuted to the maximum extent possible under the law.** This draft was produced by AIA software at 12:33:47 on 05/14/2009 under Order No.1000392252_1 which expires on 4/23/2010, and is not for resale.
User Notes: BRIDGE A201 Non-Homeownership (6-18-09) (6) (1111997498)

Building Permit
3.7.1
Capitalization
1.3
Certificate of Substantial Completion
9.8.3, 9.8.4, 9.8.5
Certificates for Payment
4.2.1, 4.2.5, 4.2.9, 9.3.3, **9.4**, 9.5, 9.6.1, 9.6.6, 9.7.1, 9.10.1, 9.10.3, 14.1.1.3, 14.2.4, 15.1.3
Certificates of Inspection, Testing or Approval
13.5.4
Certificates of Insurance
9.10.2, 11.1.3
Change Orders
1.1.1, 2.4.1, 3.4.2, 3.7.4, 3.8.2.3, 3.11.1, 3.12.8, 4.2.8, 5.2.3, 7.1.2, 7.1.3, **7.2**, 7.3.2, 7.3.6, 7.3.9, 7.3.10, 8.3.1, 9.3.1.1, 9.10.3, 10.3.2, 11.3.1.2, 11.3.4, 11.3.9, 12.1.2, 15.1.3
Change Orders, Definition of
7.2.1
CHANGES IN THE WORK
2.2.1, 3.11, 4.2.8, **7**, 7.2.1, 7.3.1, 7.4, 7.4.1, 8.3.1, 9.3.1.1, 11.3.9
Claims, Definition of
15.1.1
CLAIMS AND DISPUTES
3.2.4, 6.1.1, 6.3.1, 7.3.9, 9.3.3, 9.10.4, 10.3.3, **15**, 15.4
Claims and Timely Assertion of Claims
15.4.1
Claims for Additional Cost
3.2.4, 3.7.4, 6.1.1, 7.3.9, 10.3.2, **15.1.4**
Claims for Additional Time
3.2.4, 3.7.46.1.1, 8.3.2, 10.3.2, **15.1.5**
Concealed or Unknown Conditions, Claims for
3.7.4
Claims for Damages
3.2.4, 3.18, 6.1.1, 8.3.3, 9.5.1, 9.6.7, 10.3.3, 11.1.1, 11.3.5, 11.3.7, 14.1.3, 14.2.4, 15.1.6
Claims Subject to Arbitration
15.3.1, 15.4.1
Cleaning Up
3.15, 6.3
Commencement of the Work, Conditions Relating to
2.2.1, 3.2.2, 3.4.1, 3.7.1, 3.10.1, 3.12.6, 5.2.1, 5.2.3, 6.2.2, 8.1.2, 8.2.2, 8.3.1, 11.1, 11.3.1, 11.3.6, 11.4.1, 15.1.4
Commencement of the Work, Definition of
8.1.2
Communications Facilitating Contract Administration
3.9.1, **4.2.4**
Completion, Conditions Relating to
3.4.1, 3.11, 3.15, 4.2.2, 4.2.9, 8.2, 9.4.2, 9.8, 9.9.1, 9.10, 12.2, 13.7, 14.1.2
COMPLETION, PAYMENTS AND
9
Completion, Substantial
4.2.9, 8.1.1, 8.1.3, 8.2.3, 9.4.2, 9.8, 9.9.1, 9.10.3, 12.2, 13.7
Compliance with Laws
1.6.1, 3.2.3, 3.6, 3.7, 3.12.10, 3.13, 4.1.1, 9.6.4, 10.2.2, 11.1, 11.3, 13.1, 13.4, 13.5.1, 13.5.2, 13.6, 14.1.1, 14.2.1.3, 15.2.8, 15.4.2, 15.4.3
Concealed or Unknown Conditions
3.7.4, 4.2.8, 8.3.1, 10.3
Conditions of the Contract
1.1.1, 6.1.1, 6.1.4
Consent, Written
3.4.2, 3.7.4, 3.12.8, 3.14.2, 4.1.2, 9.3.2, 9.8.5, 9.9.1, 9.10.2, 9.10.3, 11.3.1, 13.2, 13.4.2, 15.4.4.2
Consolidation or Joinder
15.4.4
CONSTRUCTION BY OWNER OR BY SEPARATE CONTRACTORS
1.1.4, **6**
Construction Change Directive, Definition of
7.3.1
Construction Change Directives
1.1.1, 3.4.2, 3.12.8, 4.2.8, 7.1.1, 7.1.2, 7.1.3, **7.3**, 9.3.1.1
Construction Schedules, Contractor's
3.10, 3.12.1, 3.12.2, 6.1.3, 15.1.5.2
Contingent Assignment of Subcontracts
5.4, 14.2.2.2
Continuing Contract Performance
15.1.3
Contract, Definition of
1.1.2
CONTRACT, TERMINATION OR SUSPENSION OF THE
5.4.1.1, 11.3.9, **14**
Contract Administration
3.1.3, 4, 9.4, 9.5
Contract Award and Execution, Conditions Relating to
3.7.1, 3.10, 5.2, 6.1, 11.1.3, 11.3.6, 11.4.1
Contract Documents, The
1.1.1
Contract Documents, Copies Furnished and Use of
1.5.2, 2.2.5, 5.3
Contract Documents, Definition of
1.1.1
Contract Sum
3.7.4, 3.8, 5.2.3, 7.2, 7.3, 7.4, **9.1**, 9.4.2, 9.5.1.4, 9.6.7, 9.7, 10.3.2, 11.3.1, 14.2.4, 14.3.2, 15.1.4, 15.2.5
Contract Sum, Definition of
9.1
Contract Time
3.7.4, 3.7.5, 3.10.2, 5.2.3, 7.2.1.3, 7.3.1, 7.3.5, 7.4, 8.1.1, 8.2.1, 8.3.1, 9.5.1, 9.7.1, 10.3.2, 12.1.1, 14.3.2, 15.1.5.1, 15.2.5
Contract Time, Definition of
8.1.1

AIA Document A201™ – 2007. Copyright © 1911, 1915, 1918, 1925, 1937, 1951, 1958, 1961, 1963, 1966, 1970, 1976, 1987, 1997 and 2007 by The American Institute of Architects. **All rights reserved. WARNING: This AIA® Document is protected by U.S. Copyright Law and International Treaties. Unauthorized reproduction or distribution of this AIA® Document, or any portion of it, may result in severe civil and criminal penalties, and will be prosecuted to the maximum extent possible under the law.** This draft was produced by AIA software at 12:33:47 on 05/14/2009 under Order No.1000392252_1 which expires on 4/23/2010, and is not for resale.
User Notes: BRIDGE A201 Non-Homeownership (6-18-09) (6) (1111997498)

CONTRACTOR
3
Contractor, Definition of
3.1, 6.1.2
Contractor's Construction Schedules
3.10, 3.12.1, 3.12.2, 6.1.3, 15.1.5.2
Contractor's Employees
3.3.2, 3.4.3, 3.8.1, 3.9, 3.18.2, 4.2.3, 4.2.6, 10.2, 10.3, 11.1.1, 11.3.7, 14.1, 14.2.1.1,
Contractor's Liability Insurance
11.1
Contractor's Relationship with Separate Contractors and Owner's Forces
3.12.5, 3.14.2, 4.2.4, 6, 11.3.7, 12.1.2, 12.2.4
Contractor's Relationship with Subcontractors
1.2.2, 3.3.2, 3.18.1, 3.18.2, 5, 9.6.2, 9.6.7, 9.10.2, 11.3.1.2, 11.3.7, 11.3.8
Contractor's Relationship with the Architect
1.1.2, 1.5, 3.1.3, 3.2.2, 3.2.3, 3.2.4, 3.3.1, 3.4.2, 3.5.1, 3.7.4, 3.10, 3.11, 3.12, 3.16, 3.18, 4.1.3, 4.2, 5.2, 6.2.2, 7, 8.3.1, 9.2, 9.3, 9.4, 9.5, 9.7, 9.8, 9.9, 10.2.6, 10.3, 11.3.7, 12, 13.5, 15.1.2, 15.2.1
Contractor's Representations
3.2.1, 3.2.2, 3.5.1, 3.12.6, 6.2.2, 8.2.1, 9.3.3, 9.8.2
Contractor's Responsibility for Those Performing the Work
3.3.2, 3.18, 5.3.1, 6.1.3, 6.2, 9.5.1, 10.2.8
Contractor's Review of Contract Documents
3.2
Contractor's Right to Stop the Work
9.7
Contractor's Right to Terminate the Contract
14.1, 15.1.6
Contractor's Submittals
3.10, 3.11, 3.12.4, 4.2.7, 5.2.1, 5.2.3, 9.2, 9.3, 9.8.2, 9.8.3, 9.9.1, 9.10.2, 9.10.3, 11.1.3, 11.4.2
Contractor's Superintendent
3.9, 10.2.6
Contractor's Supervision and Construction Procedures
1.2.2, 3.3, 3.4, 3.12.10, 4.2.2, 4.2.7, 6.1.3, 6.2.4, 7.1.3, 7.3.5, 7.3.7, 8.2, 10, 12, 14, 15.1.3
Contractual Liability Insurance
11.1.1.8, 11.2
Coordination and Correlation
1.2, 3.2.1, 3.3.1, 3.10, 3.12.6, 6.1.3, 6.2.1
Copies Furnished of Drawings and Specifications
1.5, 2.2.5, 3.11
Copyrights
1.5, **3.17**
Correction of Work
2.3, 2.4, 3.7.3, 9.4.2, 9.8.2, 9.8.3, 9.9.1, 12.1.2, **12.2**
Correlation and Intent of the Contract Documents
1.2
Cost, Definition of
7.3.7
Costs
2.4.1, 3.2.4, 3.7.3, 3.8.2, 3.15.2, 5.4.2, 6.1.1, 6.2.3, 7.3.3.3, 7.3.7, 7.3.8, 7.3.9, 9.10.2, 10.3.2, 10.3.6, 11.3, 12.1.2, 12.2.1, 12.2.4, 13.5, 14
Cutting and Patching
3.14, 6.2.5
Damage to Construction of Owner or Separate Contractors
3.14.2, 6.2.4, 10.2.1.2, 10.2.5, 10.4, 11.1.1, 11.3, 12.2.4
Damage to the Work
3.14.2, 9.9.1, 10.2.1.2, 10.2.5, 10.4.1, 11.3.1, 12.2.4
Damages, Claims for
3.2.4, 3.18, 6.1.1, 8.3.3, 9.5.1, 9.6.7, 10.3.3, 11.1.1, 11.3.5, 11.3.7, 14.1.3, 14.2.4, 15.1.6
Damages for Delay
6.1.1, 8.3.3, 9.5.1.6, 9.7, 10.3.2
Date of Commencement of the Work, Definition of
8.1.2
Date of Substantial Completion, Definition of
8.1.3
Day, Definition of
8.1.4
Decisions of the Architect
3.7.4, 4.2.6, 4.2.7, 4.2.11, 4.2.12, 4.2.13, 15.2, 6.3, 7.3.7, 7.3.9, 8.1.3, 8.3.1, 9.2.1, 9.4, 9.5.1, 9.8.4, 9.9.1, 13.5.2, 14.2.2, 14.2.4, 15.1, 15.2
Decisions to Withhold Certification
9.4.1, **9.5**, 9.7, 14.1.1.3
Defective or Nonconforming Work, Acceptance, Rejection and Correction of
2.3.1, 2.4.1, 3.5.1, 4.2.6, 6.2.5, 9.5.1, 9.5.2, 9.6.6, 9.8.2, 9.9.3, 9.10.4, 12.2.1
Defective Work, Definition of
3.5.1
Definitions
1.1, 2.1.1, 3.1.1, 3.5.1, 3.12.1, 3.12.2, 3.12.3, 4.1.1, 15.1.1, 5.1, 6.1.2, 7.2.1, 7.3.1, 8.1, 9.1, 9.8.1
Delays and Extensions of Time
3.2., 3.7.4, 5.2.3, 7.2.1, 7.3.1, 7.4.1, **8.3**, 9.5.1, 9.7.1, 10.3.2, 10.4.1, 14.3.2, 15.1.5, 15.2.5
Disputes
6.3.1, 7.3.9, 15.1, 15.2
Documents and Samples at the Site
3.11
Drawings, Definition of
1.1.5
Drawings and Specifications, Use and Ownership of
3.11
Effective Date of Insurance
8.2.2, 11.1.2
Emergencies
10.4, 14.1.1.2, 15.1.4
Employees, Contractor's
3.3.2, 3.4.3, 3.8.1, 3.9, 3.18.2, 4.2.3, 4.2.6, 10.2, 10.3.3, 11.1.1, 11.3.7, 14.1, 14.2.1.1

AIA Document A201™ – 2007. Copyright © 1911, 1915, 1918, 1925, 1937, 1951, 1958, 1961, 1963, 1966, 1970, 1976, 1987, 1997 and 2007 by The American Institute of Architects. **All rights reserved. WARNING: This AIA® Document is protected by U.S. Copyright Law and International Treaties. Unauthorized reproduction or distribution of this AIA® Document, or any portion of it, may result in severe civil and criminal penalties, and will be prosecuted to the maximum extent possible under the law.** This draft was produced by AIA software at 12:33:47 on 05/14/2009 under Order No.1000392252_1 which expires on 4/23/2010, and is not for resale.
User Notes: BRIDGE A201 Non-Homeownership (6-18-09) (6) (1111997498)

Equipment, Labor, Materials or
1.1.3, 1.1.6, 3.4, 3.5.1, 3.8.2, 3.8.3, 3.12, 3.13.1, 3.15.1, 4.2.6, 4.2.7, 5.2.1, 6.2.1, 7.3.7, 9.3.2, 9.3.3, 9.5.1.3, 9.10.2, 10.2.1, 10.2.4, 14.2.1.1, 14.2.1.2
Execution and Progress of the Work
1.1.3, 1.2.1, 1.2.2, 2.2.3, 2.2.5, 3.1, 3.3.1, 3.4.1, 3.5.1, 3.7.1, 3.10.1, 3.12, 3.14, 4.2, 6.2.2, 7.1.3, 7.3.5, 8.2, 9.5.1, 9.9.1, 10.2, 10.3, 12.2, 14.2, 14.3.1, 15.1.3
Extensions of Time
3.2.4, 3.7.4, 5.2.3, 7.2.1, 7.3, 7.4.1, 9.5.1, 9.7.1, 10.3.2, 10.4.1, 14.3, 15.1.5, 15.2.5
Failure of Payment
9.5.1.3, **9.7**, 9.10.2, 13.6, 14.1.1.3, 14.2.1.2
Faulty Work
(See Defective or Nonconforming Work)
Final Completion and Final Payment
4.2.1, 4.2.9, 9.8.2, **9.10**, 11.1.2, 11.1.3, 11.3.1, 11.3.5, 12.3.1, 14.2.4, 14.4.3
Financial Arrangements, Owner's
2.2.1, 13.2.2, 14.1.1.4
Fire and Extended Coverage Insurance
11.3.1.1
GENERAL PROVISIONS
1
Governing Law
13.1
Guarantees (See Warranty)
Hazardous Materials
10.2.4, **10.3**
Identification of Subcontractors and Suppliers
5.2.1
Indemnification
3.17.1, **3.18**, 9.10.2, 10.3.3, 10.3.5, 10.3.6, 11.3.1.2, 11.3.7
Information and Services Required of the Owner
2.1.2, **2.2**, 3.2.2, 3.12.4, 3.12.10, 6.1.3, 6.1.4, 6.2.5, 9.6.1, 9.6.4, 9.9.2, 9.10.3, 10.3.3, 11.2, 11.4, 13.5.1, 13.5.2, 14.1.1.4, 14.1.4, 15.1.3
Initial Decision
15.2
Initial Decision Maker, Definition of
1.1.8
Initial Decision Maker, Decisions
14.2.2, 14.2.4, 15.2.1, 15.2.2, 15.2.3, 15.2.4, 15.2.5
Initial Decision Maker, Extent of Authority
14.2.2, 14.2.4, 15.1.3, 15.2.1, 15.2.2, 15.2.3, 15.2.4, 15.2.5
Injury or Damage to Person or Property
10.2.8, 10.4.1
Inspections
3.1.3, 3.3.3, 3.7.1, 4.2.2, 4.2.6, 4.2.9, 9.4.2, 9.8.3, 9.9.2, 9.10.1, 12.2.1, 13.5
Instructions to Bidders
1.1.1
Instructions to the Contractor
3.2.4, 3.3.1, 3.8.1, 5.2.1, 7, 8.2.2, 12, 13.5.2
Instruments of Service, Definition of
1.1.7
Insurance
3.18.1, 6.1.1, 7.3.7, 9.3.2, 9.8.4, 9.9.1, 9.10.2, **11**
Insurance, Boiler and Machinery
11.3.2
Insurance, Contractor's Liability
11.1
Insurance, Effective Date of
8.2.2, 11.1.2
Insurance, Loss of Use
11.3.3
Insurance, Owner's Liability
11.2
Insurance, Property
10.2.5, **11.3**
Insurance, Stored Materials
9.3.2, 11.4.1.4
INSURANCE AND BONDS
11
Insurance Companies, Consent to Partial Occupancy
9.9.1, 11.4.1.5
Insurance Companies, Settlement with
11.4.10
Intent of the Contract Documents
1.2.1, 4.2.7, 4.2.12, 4.2.13, 7.4
Interest
13.6
Interpretation
1.2.3, **1.4**, 4.1.1, 5.1, 6.1.2, 15.1.1
Interpretations, Written
4.2.11, 4.2.12, 15.1.4
Judgment on Final Award
15.4.2
Labor and Materials, Equipment
1.1.3, 1.1.6, **3.4**, 3.5.1, 3.8.2, 3.8.3, 3.12, 3.13, 3.15.1, 4.2.6, 4.2.7, 5.2.1, 6.2.1, 7.3.7, 9.3.2, 9.3.3, 9.5.1.3, 9.10.2, 10.2.1, 10.2.4, 14.2.1.1, 14.2.1.2
Labor Disputes
8.3.1
Laws and Regulations
1.5, 3.2.3, 3.6, 3.7, 3.12.10, 3.13.1, 4.1.1, 9.6.4, 9.9.1, 10.2.2, 11.1.1, 11.3, 13.1.1, 13.4, 13.5.1, 13.5.2, 13.6.1, 14, 15.2.8, 15.4
Liens
2.1.2, 9.3.3, 9.10.2, 9.10.4, 15.2.8
Limitations, Statutes of
12.2.5, 13.7, 15.4.1.1
Limitations of Liability
2.3.1, 3.2.2, 3.5.1, 3.12.10, 3.17.1, 3.18.1, 4.2.6, 4.2.7, 4.2.12, 6.2.2, 9.4.2, 9.6.4, 9.6.7, 10.2.5, 10.3.3, 11.1.2, 11.2, 11.3.7, 12.2.5, 13.4.2
Limitations of Time
2.1.2, 2.2, 2.4, 3.2.2, 3.10, 3.11, 3.12.5, 3.15.1, 4.2.7, 5.2, 5.3.1, 5.4.1, 6.2.4, 7.3, 7.4, 8.2, 9.2.1, 9.3.1, 9.3.3, 9.4.1, 9.5, 9.6, 9.7.1, 9.8, 9.9, 9.10, 11.1.3, 11.3.1.5, 11.3.6, 11.3.10, 12.2, 13.5, 13.7, 14, 15
Loss of Use Insurance
11.3.3

AIA Document A201™ – 2007. Copyright © 1911, 1915, 1918, 1925, 1937, 1951, 1958, 1961, 1963, 1966, 1970, 1976, 1987, 1997 and 2007 by The American Institute of Architects. **All rights reserved. WARNING: This AIA® Document is protected by U.S. Copyright Law and International Treaties. Unauthorized reproduction or distribution of this AIA® Document, or any portion of it, may result in severe civil and criminal penalties, and will be prosecuted to the maximum extent possible under the law.** This draft was produced by AIA software at 12:33:47 on 05/14/2009 under Order No.1000392252_1 which expires on 4/23/2010, and is not for resale.
User Notes: BRIDGE A201 Non-Homeownership (6-18-09) (6) (1111997498)

Material Suppliers
1.5, 3.12.1, 4.2.4, 4.2.6, 5.2.1, 9.3, 9.4.2, 9.6, 9.10.5
Materials, Hazardous
10.2.4, **10.3**
Materials, Labor, Equipment and
1.1.3, 1.1.6, 1.5.1, 3.4.1, 3.5.1, 3.8.2, 3.8.3, 3.12, 3.13.1, 3.15.1, 4.2.6, 4.2.7, 5.2.1, 6.2.1, 7.3.7, 9.3.2, 9.3.3, 9.5.1.3, 9.10.2, 10.2.1.2, 10.2.4, 14.2.1.1, 14.2.1.2
Means, Methods, Techniques, Sequences and Procedures of Construction
3.3.1, 3.12.10, 4.2.2, 4.2.7, 9.4.2
Mechanic's Lien
2.1.2, 15.2.8
Mediation
8.3.1, 10.3.5, 10.3.6, 15.2.1, 15.2.5, 15.2.6, **15.3**, 15.4.1
Minor Changes in the Work
1.1.1, 3.12.8, 4.2.8, 7.1, **7.4**
MISCELLANEOUS PROVISIONS
13
Modifications, Definition of
1.1.1
Modifications to the Contract
1.1.1, 1.1.2, 3.11, 4.1.2, 4.2.1, 5.2.3, 7, 8.3.1, 9.7.1, 10.3.2, 11.3.1
Mutual Responsibility
6.2
Nonconforming Work, Acceptance of
9.6.6, 9.9.3, **12.3**
Nonconforming Work, Rejection and Correction of
2.3.1, 2.4.1, 3.5.1, 4.2.6, 6.2.4, 9.5.1, 9.8.2, 9.9.3, 9.10.4, 12.2.1
Notice
2.2.1, 2.3.1, 2.4.1, 3.2.4, 3.3.1, 3.7.2, 3.12.9, 5.2.1, 9.7.1, 9.10, 10.2.2, 11.1.3, 11.4.6, 12.2.2.1, 13.3, 13.5.1, 13.5.2, 14.1, 14.2, 15.2.8, 15.4.1
Notice, Written
2.3.1, 2.4.1, 3.3.1, 3.9.2, 3.12.9, 3.12.10, 5.2.1, 9.7.1, 9.10, 10.2.2, 10.3, 11.1.3, 11.3.6, 12.2.2.1, **13.3**, 14, 15.2.8, 15.4.1
Notice of Claims
3.7.4, 4.5, 10.2.8, **15.1.2**, 15.4
Notice of Testing and Inspections
13.5.1, 13.5.2
Observations, Contractor's
3.2, 3.7.4
Occupancy
2.2.2, 9.6.6, 9.8, 11.3.1.5
Orders, Written
1.1.1, 2.3, 3.9.2, 7, 8.2.2, 11.3.9, 12.1, 12.2.2.1, 13.5.2, 14.3.1
OWNER
2
Owner, Definition of
2.1.1
Owner, Information and Services Required of the
2.1.2, **2.2**, 3.2.2, 3.12.10, 6.1.3, 6.1.4, 6.2.5, 9.3.2, 9.6.1, 9.6.4, 9.9.2, 9.10.3, 10.3.3, 11.2, 11.3, 13.5.1, 13.5.2, 14.1.1.4, 14.1.4, 15.1.3
Owner's Authority
1.5, 2.1.1, 2.3.1, 2.4.1, 3.4.2, 3.8.1, 3.12.10, 3.14.2, 4.1.2, 4.1.3, 4.2.4, 4.2.9, 5.2.1, 5.2.4, 5.4.1, 6.1, 6.3.1, 7.2.1, 7.3.1, 8.2.2, 8.3.1, 9.3.1, 9.3.2, 9.5.1, 9.6.4, 9.9.1, 9.10.2, 10.3.2, 11.1.3, 11.3.3, 11.3.10, 12.2.2, 12.3.1, 13.2.2, 14.3, 14.4, 15.2.7
Owner's Financial Capability
2.2.1, 13.2.2, 14.1.1.4
Owner's Liability Insurance
11.2
Owner's Loss of Use Insurance
11.3.3
Owner's Relationship with Subcontractors
1.1.2, 5.2, 5.3, 5.4, 9.6.4, 9.10.2, 14.2.2
Owner's Right to Carry Out the Work
2.4, 14.2.2
Owner's Right to Clean Up
6.3
Owner's Right to Perform Construction and to Award Separate Contracts
6.1
Owner's Right to Stop the Work
2.3
Owner's Right to Suspend the Work
14.3
Owner's Right to Terminate the Contract
14.2
Ownership and Use of Drawings, Specifications and Other Instruments of Service
1.1.1, 1.1.6, 1.1.7, **1.5**, 2.2.5, 3.2.2, 3.11.1, 3.17.1, 4.2.12, 5.3.1
Partial Occupancy or Use
9.6.6, **9.9**, 11.3.1.5
Patching, Cutting and
3.14, 6.2.5
Patents
3.17
Payment, Applications for
4.2.5, 7.3.9, 9.2.1, **9.3**, 9.4, 9.5, 9.6.3, 9.7.1, 9.8.5, 9.10.1, 14.2.3, 14.2.4, 14.4.3
Payment, Certificates for
4.2.5, 4.2.9, 9.3.3, **9.4**, 9.5, 9.6.1, 9.6.6, 9.7.1, 9.10.1, 9.10.3, 13.7, 14.1.1.3, 14.2.4
Payment, Failure of
9.5.1.3, **9.7**, 9.10.2, 13.6, 14.1.1.3, 14.2.1.2
Payment, Final
4.2.1, 4.2.9, 9.8.2, 9.10, 11.1.2, 11.1.3, 11.4.1, 11.4.5, 12.3.1, 13.7, 14.2.4, 14.4.3
Payment Bond, Performance Bond and
7.3.7.4, 9.6.7, 9.10.3, 11.4.9, **11.4**
Payments, Progress
9.3, **9.6**, 9.8.5, 9.10.3, 13.6, 14.2.3, 15.1.3
PAYMENTS AND COMPLETION
9

AIA Document A201™ – 2007. Copyright © 1911, 1915, 1918, 1925, 1937, 1951, 1958, 1961, 1963, 1966, 1970, 1976, 1987, 1997 and 2007 by The American Institute of Architects. **All rights reserved. WARNING: This AIA® Document is protected by U.S. Copyright Law and International Treaties. Unauthorized reproduction or distribution of this AIA® Document, or any portion of it, may result in severe civil and criminal penalties, and will be prosecuted to the maximum extent possible under the law.** This draft was produced by AIA software at 12:33:47 on 05/14/2009 under Order No.1000392252_1 which expires on 4/23/2010, and is not for resale.
User Notes: BRIDGE A201 Non-Homeownership (6-18-09) (6) (1111997498)

Payments to Subcontractors
5.4.2, 9.5.1.3, 9.6.2, 9.6.3, 9.6.4, 9.6.7, 11.4.8, 14.2.1.2
PCB
10.3.1
Performance Bond and Payment Bond
7.3.7.4, 9.6.7, 9.10.3, 11.4.9, **11.4**
Permits, Fees, Notices and Compliance with Laws
2.2.2, **3.7**, 3.13, 7.3.7.4, 10.2.2
PERSONS AND PROPERTY, PROTECTION OF
10
Polychlorinated Biphenyl
10.3.1
Product Data, Definition of
3.12.2
Product Data and Samples, Shop Drawings
3.11, **3.12**, 4.2.7
Progress and Completion
4.2.2, **8.2**, 9.8, 9.9.1, 14.1.4, 15.1.3
Progress Payments
9.3, **9.6**, 9.8.5, 9.10.3, 13.6, 14.2.3, 15.1.3
Project, Definition of the
1.1.4
Project Representatives
4.2.10
Property Insurance
10.2.5, **11.3**
PROTECTION OF PERSONS AND PROPERTY
10
Regulations and Laws
1.5, 3.2.3, 3.6, 3.7, 3.12.10, 3.13, 4.1.1, 9.6.4, 9.9.1, 10.2.2, 11.1, 11.4, 13.1, 13.4, 13.5.1, 13.5.2, 13.6, 14, 15.2.8, 15.4
Rejection of Work
3.5.1, 4.2.6, 12.2.1
Releases and Waivers of Liens
9.10.2
Representations
3.2.1, 3.5.1, 3.12.6, 6.2.2, 8.2.1, 9.3.3, 9.4.2, 9.5.1, 9.8.2, 9.10.1
Representatives
2.1.1, 3.1.1, 3.9, 4.1.1, 4.2.1, 4.2.2, 4.2.10, 5.1.1, 5.1.2, 13.2.1
Responsibility for Those Performing the Work
3.3.2, 3.18, 4.2.3, 5.3.1, 6.1.3, 6.2, 6.3, 9.5.1, 10
Retainage
9.3.1, 9.6.2, 9.8.5, 9.9.1, 9.10.2, 9.10.3
Review of Contract Documents and Field Conditions by Contractor
3.2, 3.12.7, 6.1.3
Review of Contractor's Submittals by Owner and Architect
3.10.1, 3.10.2, 3.11, 3.12, 4.2, 5.2, 6.1.3, 9.2, 9.8.2
Review of Shop Drawings, Product Data and Samples by Contractor
3.12
Rights and Remedies
1.1.2, 2.3, 2.4, 3.5.1, 3.7.4, 3.15.2, 4.2.6, 4.5, 5.3, 5.4, 6.1, 6.3, 7.3.1, 8.3, 9.5.1, 9.7, 10.2.5, 10.3, 12.2.2, 12.2.4, **13.4**, 14, 15.4
Royalties, Patents and Copyrights
3.17
Rules and Notices for Arbitration
15.4.1
Safety of Persons and Property
10.2, 10.4
Safety Precautions and Programs
3.3.1, 4.2.2, 4.2.7, 5.3.1, **10.1**, 10.2, 10.4
Samples, Definition of
3.12.3
Samples, Shop Drawings, Product Data and
3.11, **3.12**, 4.2.7
Samples at the Site, Documents and
3.11
Schedule of Values
9.2, 9.3.1
Schedules, Construction
3.10, 3.12.1, 3.12.2, 6.1.3, 15.1.5.2
Separate Contracts and Contractors
1.1.4, 3.12.5, 3.14.2, 4.2.4, 4.2.7, 6, 8.3.1, 11.4.7, 12.1.2
Shop Drawings, Definition of
3.12.1
Shop Drawings, Product Data and Samples
3.11, **3.12**, 4.2.7
Site, Use of
3.13, 6.1.1, 6.2.1
Site Inspections
3.2.2, 3.3.3, 3.7.1, 3.7.4, 4.2, 9.4.2, 9.10.1, 13.5
Site Visits, Architect's
3.7.4, 4.2.2, 4.2.9, 9.4.2, 9.5.1, 9.9.2, 9.10.1, 13.5
Special Inspections and Testing
4.2.6, 12.2.1, 13.5
Specifications, Definition of the
1.1.6
Specifications, The
1.1.1, **1.1.6**, 1.2.2, 1.5, 3.11, 3.12.10, 3.17, 4.2.14
Statute of Limitations
13.7, 15.4.1.1
Stopping the Work
2.3, 9.7, 10.3, 14.1
Stored Materials
6.2.1, 9.3.2, 10.2.1.2, 10.2.4, 11.4.1.4
Subcontractor, Definition of
5.1.1
SUBCONTRACTORS
5
Subcontractors, Work by
1.2.2, 3.3.2, 3.12.1, 4.2.3, 5.2.3, 5.3, 5.4, 9.3.1.2, 9.6.7
Subcontractual Relations
5.3, 5.4, 9.3.1.2, 9.6, 9.10, 10.2.1, 11.4.7, 11.4.8, 14.1, 14.2.1

AIA Document A201™ – 2007. Copyright © 1911, 1915, 1918, 1925, 1937, 1951, 1958, 1961, 1963, 1966, 1970, 1976, 1987, 1997 and 2007 by The American Institute of Architects. **All rights reserved. WARNING: This AIA® Document is protected by U.S. Copyright Law and International Treaties. Unauthorized reproduction or distribution of this AIA® Document, or any portion of it, may result in severe civil and criminal penalties, and will be prosecuted to the maximum extent possible under the law.** This draft was produced by AIA software at 12:33:47 on 05/14/2009 under Order No.1000392252_1 which expires on 4/23/2010, and is not for resale.
User Notes: BRIDGE A201 Non-Homeownership (6-18-09) (6) (1111997498)

Submittals
3.10, 3.11, 3.12, 4.2.7, 5.2.1, 5.2.3, 7.3.7, 9.2, 9.3, 9.8, 9.9.1, 9.10.2, 9.10.3, 11.1.3
Submittal Schedule
3.10.2, 3.12.5, 4.2.7
Subrogation, Waivers of
6.1.1, 11.4.5, **11.3.7**
Substantial Completion
4.2.9, 8.1.1, 8.1.3, 8.2.3, 9.4.2, **9.8**, 9.9.1, 9.10.3, 12.2, 13.7
Substantial Completion, Definition of
9.8.1
Substitution of Subcontractors
5.2.3, 5.2.4
Substitution of Architect
4.1.3
Substitutions of Materials
3.4.2, 3.5.1, 7.3.8
Sub-subcontractor, Definition of
5.1.2
Subsurface Conditions
3.7.4
Successors and Assigns
13.2
Superintendent
3.9, 10.2.6
Supervision and Construction Procedures
1.2.2, **3.3**, 3.4, 3.12.10, 4.2.2, 4.2.7, 6.1.3, 6.2.4, 7.1.3, 7.3.7, 8.2, 8.3.1, 9.4.2, 10, 12, 14, 15.1.3
Surety
5.4.1.2, 9.8.5, 9.10.2, 9.10.3, 14.2.2, 15.2.7
Surety, Consent of
9.10.2, 9.10.3
Surveys
2.2.3
Suspension by the Owner for Convenience
14.3
Suspension of the Work
5.4.2, 14.3
Suspension or Termination of the Contract
5.4.1.1, 11.4.9, 14
Taxes
3.6, 3.8.2.1, 7.3.7.4
Termination by the Contractor
14.1, 15.1.6
Termination by the Owner for Cause
5.4.1.1, **14.2,** 15.1.6
Termination by the Owner for Convenience
14.4
Termination of the Architect
4.1.3
Termination of the Contractor
14.2.2
TERMINATION OR SUSPENSION OF THE CONTRACT
14
Tests and Inspections
3.1.3, 3.3.3, 4.2.2, 4.2.6, 4.2.9, 9.4.2, 9.8.3, 9.9.2, 9.10.1, 10.3.2, 11.4.1.1, 12.2.1, **13.5**
TIME
8
Time, Delays and Extensions of
3.2.4, 3.7.4, 5.2.3, 7.2.1, 7.3.1, 7.4.1, **8.3**, 9.5.1, 9.7.1, 10.3.2, 10.4.1, 14.3.2, 15.1.5, 15.2.5
Time Limits
2.1.2, 2.2, 2.4, 3.2.2, 3.10, 3.11, 3.12.5, 3.15.1, 4.2, 4.4, 4.5, 5.2, 5.3, 5.4, 6.2.4, 7.3, 7.4, 8.2, 9.2, 9.3.1, 9.3.3, 9.4.1, 9.5, 9.6, 9.7, 9.8, 9.9, 9.10, 11.1.3, 11.4.1.5, 11.4.6, 11.4.10, 12.2, 13.5, 13.7, 14, 15.1.2, 15.4
Time Limits on Claims
3.7.4, 10.2.8, **13.7**, 15.1.2
Title to Work
9.3.2, 9.3.3
Transmission of Data in Digital Form
1.6
UNCOVERING AND CORRECTION OF WORK
12
Uncovering of Work
12.1
Unforeseen Conditions, Concealed or Unknown
3.7.4, 8.3.1, 10.3
Unit Prices
7.3.3.2, 7.3.4
Use of Documents
1.1.1, 1.5, 2.2.5, 3.12.6, 5.3
Use of Site
3.13, 6.1.1, 6.2.1
Values, Schedule of
9.2, 9.3.1
Waiver of Claims by the Architect
13.4.2
Waiver of Claims by the Contractor
9.10.5, 11.4.7, 13.4.2, 15.1.6
Waiver of Claims by the Owner
9.9.3, 9.10.3, 9.10.4, 11.4.3, 11.4.5, 11.4.7, 12.2.2.1, 13.4.2, 14.2.4, 15.1.6
Waiver of Consequential Damages
14.2.4, 15.1.6
Waiver of Liens
9.10.2, 9.10.4
Waivers of Subrogation
6.1.1, 11.4.5, **11.3.7**
Warranty
3.5, 4.2.9, 9.3.3, 9.8.4, 9.9.1, 9.10.4, 12.2.2, 13.7.1
Weather Delays
15.1.5.2
Work, Definition of
1.1.3
Written Consent
1.5.2, 3.4.2, 3.7.4, 3.12.8, 3.14.2, 4.1.2, 9.3.2, 9.8.5, 9.9.1, 9.10.2, 9.10.3, 11.4.1, 13.2, 13.4.2, 15.4.4.2

AIA Document A201™ – 2007. Copyright © 1911, 1915, 1918, 1925, 1937, 1951, 1958, 1961, 1963, 1966, 1970, 1976, 1987, 1997 and 2007 by The American Institute of Architects. **All rights reserved. WARNING: This AIA® Document is protected by U.S. Copyright Law and International Treaties. Unauthorized reproduction or distribution of this AIA® Document, or any portion of it, may result in severe civil and criminal penalties, and will be prosecuted to the maximum extent possible under the law.** This draft was produced by AIA software at 12:33:47 on 05/14/2009 under Order No.1000392252_1 which expires on 4/23/2010, and is not for resale.
User Notes: BRIDGE A201 Non-Homeownership (6-18-09) (6) (1111997498)

Written Interpretations
4.2.11, 4.2.12
Written Notice
2.3, 2.4, 3.3.1, 3.9, 3.12.9, 3.12.10, 5.2.1, 8.2.2, 9.7, 9.10, 10.2.2, 10.3, 11.1.3, 11.4.6, 12.2.2, 12.2.4, **13.3**, 14, 15.4.1
Written Orders
1.1.1, 2.3, 3.9, 7, 8.2.2, 11.4.9, 12.1, 12.2, 13.5.2, 14.3.1, 15.1.2

DRAFT

AIA Document A201™ – 2007. Copyright © 1911, 1915, 1918, 1925, 1937, 1951, 1958, 1961, 1963, 1966, 1970, 1976, 1987, 1997 and 2007 by The American Institute of Architects. **All rights reserved. WARNING: This AIA® Document is protected by U.S. Copyright Law and International Treaties. Unauthorized reproduction or distribution of this AIA® Document, or any portion of it, may result in severe civil and criminal penalties, and will be prosecuted to the maximum extent possible under the law.** This draft was produced by AIA software at 12:33:47 on 05/14/2009 under Order No.1000392252_1 which expires on 4/23/2010, and is not for resale.
User Notes: BRIDGE A201 Non-Homeownership (6-18-09) (6) (1111997498)

ARTICLE 1 GENERAL PROVISIONS

§ 1.1 BASIC DEFINITIONS

§ 1.1.1 THE CONTRACT DOCUMENTS

The Contract Documents are enumerated in the Agreement between the Owner and Contractor (hereinafter the Agreement) and consist of the Agreement, Conditions of the Contract (General, Supplementary and other Conditions), Drawings, Specifications, Addenda issued prior to execution of the Contract, other documents listed in the Agreement and Modifications issued after execution of the Contract. A Modification is (1) a written amendment to the Contract signed by both parties, (2) a Change Order, (3) a Construction Change Directive or (4) a written order for a minor change in the Work issued by the Architect. Unless specifically enumerated in the Agreement, the Contract Documents do not include the advertisement or invitation to bid, Instructions to Bidders, sample forms, other information furnished by the Owner in anticipation of receiving bids or proposals, the Contractor's bid or proposal, or portions of Addenda relating to bidding requirements.

§ 1.1.2 THE CONTRACT

The Contract Documents form the Contract for Construction. The Contract represents the entire and integrated agreement between the parties hereto and supersedes prior negotiations, representations or agreements, either written or oral. The Contract may be amended or modified only by a Modification. The Contract Documents shall not be construed to create a contractual relationship of any kind (1) between the Contractor and the Architect or the Architect's consultants, (2) between the Owner and a Subcontractor or a Sub-subcontractor (except the Owner's status as a third-party beneficiary under subcontracts as set forth in Section 5.3), (3) between the Owner and the Architect or the Architect's consultants or (4) between any persons or entities other than the Owner and the Contractor. The Architect shall, however, be entitled to performance and enforcement of obligations under the Contract intended to facilitate performance of the Architect's duties, however, the parties to this Contract do not intend that the Architect be a third party beneficiary of this Contract.

§ 1.1.3 THE WORK

The term "Work" means the construction and services required by the Contract Documents, whether completed or partially completed, and includes all other labor, materials, equipment and services provided or to be provided by the Contractor to fulfill the Contractor's obligations. The Work may constitute the whole or a part of the Project.

§ 1.1.4 THE PROJECT

The Project is the total construction of which the Work performed under the Contract Documents may be the whole or a part and which may include construction by the Owner and by separate contractors.

§ 1.1.5 THE DRAWINGS

The Drawings are the graphic and pictorial portions of the Contract Documents showing the design, location and dimensions of the Work, generally including plans, elevations, sections, details, schedules and diagrams. Drawings are partly diagrammatic and may not show each and every piece of required material needed for completed installation. Drawings show the general arrangement, design and extent of the Work. Construction not detailed or specified shall be equal or similar to adjacent detailed or specified construction. All manufactured items of one specified type or items to be used for similar purposes shall be by one manufacturer and of identical finish and design appearance. In cases where a later model or product has superseded that specified, the superseding replacement model shall be installed. All products shall be installed consistent with the manufacturer's directions and instructions. Any manufacturer's installation instructions which exceed or are inconsistent with the requirements of the Contract Documents shall be promptly brought to the attention of the Owner.

Any Work specified by reference to the number, symbol, or title of a specific standard, such as Commercial Standard, U.B.C., a Federal Specifications, a trade association standard or a similar standard, shall comply with the requirements in the latest published applicable standard and any amendments or supplements to that standard in effect on the date of the Contract. The standard referred to in the Contract Documents shall have full force and effect as though included in the Contract Documents. The Owner shall furnish, upon request, information concerning how that applicable standard may be obtained.

§ 1.1.6 THE SPECIFICATIONS

The Specifications are that portion of the Contract Documents consisting of the written requirements for materials, equipment, systems, standards and workmanship for the Work, and performance of related services.

AIA Document A201™ – 2007. Copyright © 1911, 1915, 1918, 1925, 1937, 1951, 1958, 1961, 1963, 1966, 1970, 1976, 1987, 1997 and 2007 by The American Institute of Architects. **All rights reserved. WARNING: This AIA® Document is protected by U.S. Copyright Law and International Treaties. Unauthorized reproduction or distribution of this AIA® Document, or any portion of it, may result in severe civil and criminal penalties, and will be prosecuted to the maximum extent possible under the law.** This draft was produced by AIA software at 12:33:47 on 05/14/2009 under Order No.1000392252_1 which expires on 4/23/2010, and is not for resale.
User Notes: BRIDGE A201 Non-Homeownership (6-18-09) (6) (1111997498)

§ 1.1.7 INSTRUMENTS OF SERVICE
Instruments of Service are representations, in any medium of expression now known or later developed, of the tangible and intangible creative work performed by the Architect and the Architect's consultants under their respective professional services agreements. Instruments of Service may include, without limitation, studies, surveys, models, sketches, drawings, specifications, and other similar materials.

§ 1.1.8 INITIAL DECISION MAKER
~~The Initial Decision Maker is the person identified in the Agreement to render initial decisions on Claims in accordance with Section 15.2 and certify termination of the Agreement under Section 14.2.2.~~ **[INTENTIONALLY DELETED]**

Formatted: Font color: Blue

Formatted: Font: Bold

§ 1.2 CORRELATION AND INTENT OF THE CONTRACT DOCUMENTS
§ 1.2.1 The intent of the Contract Documents is to include all items necessary for the proper execution and completion of the Work by the Contractor. The Contract Documents are complementary, and what is required by one shall be as binding as if required by all; performance by the Contractor shall be required only to the extent consistent with the Contract Documents and reasonably inferable from them as being necessary to produce the indicated results. In the event of inconsistencies within or between parts of the Contract Documents or between the Contract Documents and applicable laws, ordinances, rules and regulations of federal, state, city or municipal governments or agencies now in force or that may be enacted hereafter, the Contractor shall comply with the more stringent requirements.

§ 1.2.2 Organization of the Specifications into divisions, sections and articles, and arrangement of Drawings shall not control the Contractor in dividing the Work among Subcontractors or in establishing the extent of Work to be performed by any trade.

§ 1.2.3 Unless otherwise stated in the Contract Documents, words that have well-known technical or construction industry meanings are used in the Contract Documents in accordance with such recognized meanings.

§ 1.2.4 The terms "knowledge," "recognize," and "discover," their respective derivatives, and similar terms in the Contract Documents, as used in reference to the Contractor shall be interpreted to mean that which the Contractor knows (or should know), recognizes (or should recognize), and discovers (or should discover) in exercising the care, skill, and diligence required by the Contract Documents. Analogously, the expression "reasonably inferable" and similar terms in the Contract Documents shall be interpreted to mean reasonably inferable by a contractor familiar with the Project and exercising the care, skill, and diligence required of the Contractor by the Contract Documents.

§ 1.3 CAPITALIZATION
Terms capitalized in these General Conditions include those that are (1) specifically defined, (2) the titles of numbered articles or (3) the titles of other documents published by the American Institute of Architects.

§ 1.4 INTERPRETATION
In the interest of brevity the Contract Documents frequently omit modifying words such as "all" and "any" and articles such as "the" and "an," but the fact that a modifier or an article is absent from one statement and appears in another is not intended to affect the interpretation of either statement.

§ 1.5 OWNERSHIP AND USE OF DRAWINGS, SPECIFICATIONS AND OTHER INSTRUMENTS OF SERVICE
§ 1.5.1 The Architect and the Architect's consultants shall be deemed the authors and owners of their respective Instruments of Service, including the Drawings and Specifications, and will retain all common law, statutory and other reserved rights, including copyrights. The Contractor, Subcontractors, Sub-subcontractors, and material or equipment suppliers shall not own or claim a copyright in the Instruments of Service. Submittal or distribution to meet official regulatory requirements or for other purposes in connection with this Project is not to be construed as publication in derogation of the Architect's or Architect's consultants' reserved rights.

§ 1.5.2 The Contractor, Subcontractors, Sub-subcontractors and material or equipment suppliers are authorized to use and reproduce the Instruments of Service provided to them solely and exclusively for execution of the Work. All copies made under this authorization shall bear the copyright notice, if any, shown on the Instruments of Service. The Contractor, Subcontractors, Sub-subcontractors, and material or equipment suppliers may not use the Instruments of Service on other projects or for additions to this Project outside the scope of the Work without the specific written consent of the Owner, Architect and the Architect's consultants.

AIA Document A201™ – 2007. Copyright © 1911, 1915, 1918, 1925, 1937, 1951, 1958, 1961, 1963, 1966, 1970, 1976, 1987, 1997 and 2007 by The American Institute of Architects. **All rights reserved. WARNING: This AIA® Document is protected by U.S. Copyright Law and International Treaties. Unauthorized reproduction or distribution of this AIA® Document, or any portion of it, may result in severe civil and criminal penalties, and will be prosecuted to the maximum extent possible under the law.** This draft was produced by AIA software at 12:33:47 on 05/14/2009 under Order No.1000392252_1 which expires on 4/23/2010, and is not for resale.
User Notes: BRIDGE A201 Non-Homeownership (6-18-09) (6) (1111997498)

§ 1.6 TRANSMISSION OF DATA IN DIGITAL FORM
If the parties intend to transmit Instruments of Service or any other information or documentation in digital form, they shall endeavor to establish necessary protocols governing such transmissions, unless otherwise already provided in the Agreement or the Contract Documents.

ARTICLE 2 OWNER
§ 2.1 GENERAL
§ 2.1.1 The Owner is the person or entity identified as such in the Agreement and is referred to throughout the Contract Documents as if singular in number. The Owner shall designate in writing a representative who shall have express authority to bind the Owner with respect to all matters requiring the Owner's approval or authorization. Except as otherwise provided in Section 4.2.1, the Architect does not have such authority. The term "Owner" means the Owner or the Owner's authorized representative.

§ 2.1.2 The Owner shall furnish to the Contractor within fifteen days after receipt of a written request, information necessary and relevant for the Contractor to evaluate, give notice of or enforce mechanic's lien rights. Such information shall include a correct statement of the record legal title to the property on which the Project is located, usually referred to as the site, and the Owner's interest therein.

§ 2.2 INFORMATION AND SERVICES REQUIRED OF THE OWNER
§ 2.2.1 Prior to commencement of the Work, the Contractor may request in writing that the Owner provide reasonable evidence that the Owner has made financial arrangements to fulfill the Owner's obligations under the Contract. ~~Thereafter, the Contractor may only request such evidence if (1) the Owner fails to make payments to the Contractor as the Contract Documents require; (2) a change in the Work materially changes the Contract Sum; or (3) the Contractor identifies in writing a reasonable concern regarding the Owner's ability to make payment when due. The Owner shall furnish such evidence as a condition precedent to commencement or continuation of the Work or the portion of the Work affected by a material change. After the Owner furnishes the evidence, the Owner shall not materially vary such financial arrangements without prior notice to the Contractor.~~

§ 2.2.2 Except for permits and fees that are the responsibility of the Contractor under the Contract Documents, including those required under Section 3.7.1, the Owner shall secure and pay for necessary approvals, easements, assessments and charges required for construction, use or occupancy of permanent structures or for permanent changes in existing facilities.

§ 2.2.3 The Owner shall furnish to the Contractor a survey describing the physical location of the site of the Project, and a legal description of the site that the Owner possessed as of the date of execution of the Contract. Receipt of this survey shall not release the Contractor from any duty to conduct a reasonable and customary independent investigation of the site as detailed in the Contract Documents.~~The Owner shall furnish surveys describing physical characteristics, legal limitations and utility locations for the site of the Project, and a legal description of the site. The Contractor shall be entitled to rely on the accuracy of information furnished by the Owner but shall exercise proper precautions relating to the safe performance of the Work.~~

§ 2.2.4 The Owner shall furnish information or services required of the Owner by the Contract Documents with reasonable promptness. The Owner shall also furnish any other information or services under the Owner's control and relevant to the Contractor's performance of the Work with reasonable promptness after receiving the Contractor's written request for such information or services.

§ 2.2.5 Unless otherwise provided in the Contract Documents, the Owner shall furnish to the Contractor one copy of the Contract Documents for purposes of making reproductions pursuant to Section 1.5.2.

§ 2.2.6 All information received by the Contractor (including, without limitation, information concerning the nature of Owner's or its affiliate's organization, business, products, services, market research, assets, revenues and any plans or materials prepared for Owner pursuant to, or in connection with, the terms of the Contract) shall be kept confidential by the Contractor and its representatives and shall not be used in any manner by the Contractor or its representatives except in connection with the performance of their duties under the Contract; provided, however, that the Contractor may disclose such information to its employees, Subcontractors, officers, directors or agents to the extent necessary to the performance of its duties under the Contract so long as such persons agree to maintain the confidentiality of such information in accordance with this paragraph. The foregoing confidentiality provisions shall

AIA Document A201™ – 2007. Copyright © 1911, 1915, 1918, 1925, 1937, 1951, 1958, 1961, 1963, 1966, 1970, 1976, 1987, 1997 and 2007 by The American Institute of Architects. **All rights reserved. WARNING: This AIA® Document is protected by U.S. Copyright Law and International Treaties. Unauthorized reproduction or distribution of this AIA® Document, or any portion of it, may result in severe civil and criminal penalties, and will be prosecuted to the maximum extent possible under the law.** This draft was produced by AIA software at 12:33:47 on 05/14/2009 under Order No.1000392252_1 which expires on 4/23/2010, and is not for resale.
User Notes: BRIDGE A201 Non-Homeownership (6-18-09) (6) (1111997498)

not apply to such portions of the information received that are generally available to the public or required by law to be disclosed. The obligations under this paragraph shall survive the expiration or termination of the Contract.

§ 2.3 OWNER'S RIGHT TO STOP THE WORK

If the Contractor fails to correct Work that is not in accordance with the requirements of the Contract Documents as required by Section 12.2 or ~~repeatedly~~ fails to carry out Work in accordance with the Contract Documents, the Owner may issue a written order to the Contractor to stop the Work, or any portion thereof, until the cause for such order has been eliminated; however, the right of the Owner to stop the Work shall not give rise to a duty on the part of the Owner to exercise this right for the benefit of the Contractor or any other person or entity, except to the extent required by Section 6.1.3. The Contractor shall not be entitled to any adjustment in Contract Time or Contract Sum as a result of any such order.

§ 2.4 OWNER'S RIGHT TO CARRY OUT THE WORK

If the Contractor defaults or neglects to carry out the Work in accordance with the Contract Documents and fails within a ten-day period after receipt of written notice from the Owner to commence and continue correction of such default or neglect with diligence and promptness, the Owner may, without prejudice to other remedies the Owner may have, correct such deficiencies. In such case an appropriate Change Order shall be issued and be deemed to be executed~~signed~~ by the Contractor deducting from payments then or thereafter due the Contractor the reasonable cost of correcting such deficiencies, including Owner's expenses and compensation for the Architect's additional services made necessary by such default, neglect or failure. ~~Such action by the Owner and amounts charged to the Contractor are both subject to prior approval of the Architect.~~ If payments then or thereafter due the Contractor are not sufficient to cover such amounts, the Contractor shall pay the difference to the Owner.

§ 2.5 EXTENT OF OWNER RIGHTS

§ 2.5.1 The rights stated in this Article 2 and elsewhere in the Contract Documents are cumulative and not in limitation of any rights of the Owner granted in the Contract Documents, at law, or in equity.

§ 2.5.2 In no event shall the Owner have control over, charge of, or any responsibility for construction means, methods, techniques, sequences, or procedures or for safety precautions and programs in connection with the Work, notwithstanding any of the rights and authority granted the Owner in the Contract Documents.

ARTICLE 3 CONTRACTOR

§ 3.1 GENERAL

§ 3.1.1 The Contractor is the person or entity identified as such in the Agreement and is referred to throughout the Contract Documents as if singular in number. The Contractor shall be lawfully licensed, if required in the jurisdiction where the Project is located. The Contractor shall designate in writing a representative who shall have express authority to bind the Contractor with respect to all matters under this Contract. The term "Contractor" means the Contractor or the Contractor's authorized representative.

§ 3.1.2 The Contractor shall perform the Work in accordance with the Contract Documents.

§ 3.1.3 The Contractor shall not be relieved of obligations to perform the Work in accordance with the Contract Documents either by activities or duties of the Architect in the Architect's administration of the Contract, or by tests, inspections or approvals required or performed by persons or entities other than the Contractor.

§ 3.2 REVIEW OF CONTRACT DOCUMENTS AND FIELD CONDITIONS BY CONTRACTOR

§ 3.2.1 Execution of the Contract by the Contractor is a representation by the Contractor that, prior to the commencement of the Work it has made an inspection of the site, including but not limited to (i) the physical conditions of the site including soil and ground conditions, and all structures located on the site; (ii) all conditions and structures on adjoining properties; (iii) the nature and location of the general area including prevailing weather conditions; (iv) the availability and cost of labor, equipment, materials, and supplies; (v) the site utilities and utility connections; and (vi) conditions related to transportation, handling, storage and disposal of materials. Contractor further acknowledges that it has fully satisfied itself as to the nature, character, and quality of surface and subsurface conditions to the extent such information is reasonably ascertainable from an inspection of the site, from information available from the local municipality and other public bodies, and from the Contract Documents. The Contractor shall report any discovered conditions to the Owner that bear on the performance of the Work. The Owner shall not be required to make any adjustments in either the Contract Sum or the Contract Time in connection with any failure by the Contractor to have complied with the requirements of this Subparagraph.~~Execution of the Contract by the~~

AIA Document A201™ – 2007. Copyright © 1911, 1915, 1918, 1925, 1937, 1951, 1958, 1961, 1963, 1966, 1970, 1976, 1987, 1997 and 2007 by The American Institute of Architects. **All rights reserved. WARNING: This AIA® Document is protected by U.S. Copyright Law and International Treaties. Unauthorized reproduction or distribution of this AIA® Document, or any portion of it, may result in severe civil and criminal penalties, and will be prosecuted to the maximum extent possible under the law.** This draft was produced by AIA software at 12:33:47 on 05/14/2009 under Order No.1000392252_1 which expires on 4/23/2010, and is not for resale.
User Notes: BRIDGE A201 Non-Homeownership (6-18-09) (6) (1111997498)

~~Contractor is a representation that the Contractor has visited the site, become generally familiar with local conditions under which the Work is to be performed and correlated personal observations with requirements of the Contract Documents.~~

§ 3.2.2 Because the Contract Documents are complementary, the Contractor shall, before starting each portion of the Work, carefully study and compare the various Drawings and Contract Documents relative to that portion of the Work, as well as the information furnished by the Owner pursuant to Section 2.2.3, shall take field measurements of any existing conditions related to that portion of the Work, and shall observe any conditions at the site affecting it. If, during the progress of the Work, the Contractor discovers any error, inconsistency or omission in the Contract Documents, the Contractor shall immediately report such matter to the Architect and the Owner and shall halt all affected Work until such discrepancies have been corrected in accordance with requirements of Article 7. Additions to the Contract Sum or Contract Time shall not be allowed for correction of problems that could have been avoided by careful review of the Contract Documents and/or minor adjusting of size or locations of various items for proper fit.~~These obligations are for the purpose of facilitating coordination and construction by the Contractor and are not for the purpose of discovering errors, omissions, or inconsistencies in the Contract Documents; however, the Contractor shall promptly report to the Architect any errors, inconsistencies or omissions discovered by or made known to the Contractor as a request for information in such form as the Architect may require. It is recognized that the Contractor's review is made in the Contractor's capacity as a contractor and not as a licensed design professional, unless otherwise specifically provided in the Contract Documents.~~ It is recognized that the Contractor's review is made in the Contractor's capacity as a Contractor and not as a licensed design professional unless otherwise specifically provided in the Contract Documents.

§ 3.2.3 The Contractor is not required to ascertain that the Contract Documents are in accordance with applicable laws, statutes, ordinances, codes, rules and regulations, or lawful orders and all other requirements of public authorities now in force or that may be enacted hereafter applicable to the performance of the Work (collectively, the "Applicable Requirements") unless such Applicable Requirements bear upon the performance of the Work, but the Contractor shall promptly report to the Architect and the Owner any nonconformity discovered by or made known to the Contractor as a request for information in such form as the Architect may require~~.~~

§ 3.2.4 If the Contractor believes that additional cost or time is involved because of clarifications or instructions the Architect issues in response to the Contractor's notices or requests for information pursuant to Sections 3.2.2 or 3.2.3, the Contractor shall ~~make Claims as provided in Article 15~~submit a request for a change in accordance with Article 7. If the Contractor fails to perform the obligations of Sections 3.2.2 or 3.2.3, ~~the Contractor shall pay such~~the Owner shall not be required to make any adjustments to the Contract Time or Contract Sum, and the Contractor shall assume full responsibility for any costs and damages to the Owner (including but not limited to damages relating to delays) as would have been avoided if the Contractor had performed such obligations. If the Contractor performs those obligations, the Contractor shall not be liable to the Owner or Architect for damages resulting from errors, inconsistencies or omissions in the Contract Documents, for differences between field measurements or conditions and the Contract Documents, or for nonconformities of the Contract Documents to ~~applicable laws, statutes, ordinances, codes, rules and regulations, and lawful orders of public authorities~~Applicable Requirements, unless the Contractor recognized such error, inconsistency, omission or difference and failed to report it to the Architect and the Owner.

§ 3.3 SUPERVISION AND CONSTRUCTION PROCEDURES

§ 3.3.1 The Contractor shall supervise and direct the Work~~,~~, including the work of all Subcontractors, using the Contractor's best skill and attention. The Contractor shall coordinate the work of all Subcontractors to allow for the efficient progress of the Work. The Contractor shall be solely responsible for, and have control over, construction means, methods, techniques, sequences and procedures and for coordinating all portions of the Work under the Contract, unless the Contract Documents give other specific instructions concerning these matters. If the Contract Documents give specific instructions concerning construction means, methods, techniques, sequences or procedures, the Contractor shall evaluate the jobsite safety thereof and, except as stated below, shall be fully and solely responsible for the jobsite safety of such means, methods, techniques, sequences or procedures. If the Contractor determines that such means, methods, techniques, sequences or procedures may not be safe, the Contractor shall give timely written notice to the Owner and Architect and shall not proceed with that portion of the Work without further written instructions from the Architect and the Owner. ~~If the Contractor is then instructed to proceed with the required means, methods, techniques, sequences or procedures without acceptance of changes proposed by the Contractor, the Owner shall be solely responsible for any loss or damage arising solely from those Owner-required means, methods, techniques, sequences or procedures.~~

AIA Document A201™ – 2007. Copyright © 1911, 1915, 1918, 1925, 1937, 1951, 1958, 1961, 1963, 1966, 1970, 1976, 1987, 1997 and 2007 by The American Institute of Architects. **All rights reserved. WARNING: This AIA® Document is protected by U.S. Copyright Law and International Treaties. Unauthorized reproduction or distribution of this AIA® Document, or any portion of it, may result in severe civil and criminal penalties, and will be prosecuted to the maximum extent possible under the law.** This draft was produced by AIA software at 12:33:47 on 05/14/2009 under Order No.1000392252_1 which expires on 4/23/2010, and is not for resale.
User Notes: BRIDGE A201 Non-Homeownership (6-18-09) (6) (1111997498)

§ 3.3.2 The Contractor shall be responsible to the Owner for acts and omissions of the Contractor's employees, Subcontractors and their agents and employees, and other persons or entities performing portions of the Work for, or on behalf of, the Contractor or any of its Subcontractors, and for any damages,losses, costs, and expenses, including, but not limited to, reasonable attorneys' fees resulting from such acts or omissions.

§ 3.3.3 The Contractor shall be responsible for inspection of portions of Work already performed to determine that such portions are in proper condition to receive subsequent Work. The Contractor shall repair damage to utility lines, utility cables and water, sewer, or other utility pipes and damage to public improvements, including, but not limited to, sidewalks, caused by the Contractor or any Subcontractors during the performance of the Work.

§ 3.4 LABOR AND MATERIALS

§ 3.4.1 Unless otherwise provided in the Contract Documents, the Contractor shall provide and pay for labor, materials, equipment, tools, construction equipment and machinery, water, heat, utilities, transportation, and other facilities and services necessary for proper execution and completion of the Work, whether temporary or permanent and whether or not incorporated or to be incorporated in the Work.

§ 3.4.2 Except in the case of minor changes in the Work authorized by the Architect in accordance with Sections 3.12.8 or 7.4, the Contractor may make substitutions only with the written consent of the Owner, after evaluation by the Architect and in accordance with a Change Order or Construction Change Directive.

§ 3.4.3 The Contractor shall enforce strict discipline and good order among the Contractor's employees and other persons carrying out the Work. The Contractor shall not permit employment of unfit persons or persons not properly skilled in tasks assigned to them.

§ 3.4.4 The Contractor shall only employ or use labor in connection with the Work capable of working harmoniously with all trades, crafts, and any other individuals associated with the Project. The Contractor shall also use best efforts to minimize the likelihood of any strike, work stoppage, or other labor disturbance.

.1 If the Work is to be performed by trade unions, the Contractor shall make all necessary arrangements to reconcile, without delay, damage, or cost to the Owner and without recourse to the Architect or the Owner, any conflict between the Contract Documents and any agreements or regulations of any kind at any time in the force among members or councils that regulate or distinguish the activities that shall not be included in the work of any particular trade.

.2 In case the progress of the Work is affected by any undue delay in furnishing or installing any items or materials or equipment required under the Contract Documents because of such conflict involving any such labor agreement or regulation, the Owner may require that other material or equipment of equal kind and quality be provided pursuant to a Change Order or Construction Change Directive.

Formatted: AIA Body Text Indented

Formatted: Font: Bold

Formatted: AIA Body Text Hanging

§ 3.5 WARRANTY

§ 3.5.1 The Contractor warrants to the Owner and Architect that materials and equipment furnished under the Contract will be of good quality and new unless the Contract Documents require or permit otherwise. The Contractor further warrants that the Work will conform to the requirements of the Contract Documents and will be free from defects, except for those inherent in the quality of the Work the Contract Documents require or permit. Work, materials, or equipment not conforming to these requirements ~~may~~ shall be considered defective unless expressly accepted by the Owner. The Contractor's warranty excludes remedy for damage or defect caused by abuse, alterations to the Work not executed by the Contractor, improper or insufficient maintenance, improper operation, or normal wear and tear and normal usage. If required by the Architect and the Owner, the Contractor shall furnish satisfactory evidence as to the kind and quality of materials and equipment. The Contractor's warranty in this Section 3.5.1 is but one of many warranties made by Contractor, whether in the Contract Documents or otherwise, and does not in any way limit Contractor's other obligations relating to the Contract Documents and/or arising under law. In the event that any warranties set forth in the Specifications exceed the warranties set forth in this Section in scope or in time, the more extensive warranties shall control.

§ 3.5.2 The Contractor agrees to assign the Owner at the time of final completion of the Work any and all manufacturer's warranties relating to materials and labor used in the Work and further agrees to perform the Work in such manner so as to preserve any and all such manufacturer's warranties.

AIA Document A201™ – 2007. Copyright © 1911, 1915, 1918, 1925, 1937, 1951, 1958, 1961, 1963, 1966, 1970, 1976, 1987, 1997 and 2007 by The American Institute of Architects. **All rights reserved. WARNING: This AIA® Document is protected by U.S. Copyright Law and International Treaties. Unauthorized reproduction or distribution of this AIA® Document, or any portion of it, may result in severe civil and criminal penalties, and will be prosecuted to the maximum extent possible under the law.** This draft was produced by AIA software at 12:33:47 on 05/14/2009 under Order No.1000392252_1 which expires on 4/23/2010, and is not for resale.
User Notes: BRIDGE A201 Non-Homeownership (6-18-09) (6) (1111997498)

§ 3.6 TAXES

The Contractor shall pay sales, consumer, use and similar taxes for the Work provided by the Contractor that are legally enacted when bids are received or negotiations concluded, whether or not yet effective or merely scheduled to go into effect.

§ 3.7 PERMITS, FEES, NOTICES, AND COMPLIANCE WITH LAWS

§ 3.7.1 ~~Unless otherwise provided in the Contract Documents, the Contractor shall secure and pay for the building permit as well as for other permits, fees, licenses, and inspections by government agencies necessary for~~ Except as set forth in Subparagraph 2.2.2, the Owner, as applicable, shall secure, pay for, and, as soon as practicable, furnish the Contractor with copies or certificates of all permits and fees, licenses, and inspections necessary for the proper execution and completion of the Work, including, without limitation, all building permits. All connection charges, assessments, or inspection fees as may be imposed by any municipal agency or utility company shall be the Owner's responsibility. ~~that are customarily secured after execution of the Contract and legally required at the time bids are received or negotiations concluded.~~

§ 3.7.2 The Contractor shall comply with and give notices required by ~~applicable~~ Applicable ~~laws, statutes, ordinances, codes, rules and regulations, and lawful orders of public authorities~~Requirements applicable to performance of the Work. The Contractor shall procure and obtain all bonds required of the Owner or the Contractor by the municipality in which the Project is located or any other public or private body with jurisdiction over the Project. In connection with such bonds, the Contractor shall prepare all applications, supply all necessary backup material, and furnish the surety with any required personal undertakings. The Contractor shall also obtain and pay all charges for all approvals for street closings, parking meter approval, and other similar matters as may be necessary or appropriate from time to time for the performance of the Work.

§ 3.7.3 The Contractor shall cause all Work performed in connection with the Project to be performed in compliance with all the Applicable Requirements. If the Contractor performs Work that the Contractor knows or should have known to be contrary to the Applicable Requirements (or any part thereof) without such notice to the Architect and Owner, the Contractor shall assume appropriate responsibility for such Work and shall bear the costs attributable to correction.~~If the Contractor performs Work knowing it to be contrary to applicable laws, statutes, ordinances, codes, rules and regulations, or lawful orders of public authorities, the Contractor shall assume appropriate responsibility for such Work and shall bear the costs attributable to correction.~~

§ 3.7.4 Concealed or Unknown Conditions. If the Contractor encounters conditions at the site that are (1) subsurface or otherwise concealed physical conditions that differ materially from those indicated in the Contract Documents or (2) unknown physical conditions of an unusual nature, that differ materially from those ordinarily found to exist and generally recognized as inherent in construction activities of the character provided for in the Contract Documents, the Contractor shall promptly provide notice to the Owner and the Architect before conditions are disturbed and in no event later than 21 days after first observance of the conditions. The Architect will promptly investigate such conditions and, if the Architect determines that they differ materially and cause an increase or decrease in the Contractor's cost of, or time required for, performance of any part of the Work, will recommend an equitable adjustment in the Contract Sum or Contract Time, or both. If the Architect determines that the conditions at the site are not materially different from those indicated in the Contract Documents and that no change in the terms of the Contract is justified, the Architect shall promptly notify the Owner and Contractor in writing, stating the reasons. If either party disputes the Architect's determination or recommendation, that party may proceed as provided in Article 15. Any Claim for an increase in Contract Time or Contract Sum based on, or challenging the decision of the Architect shall be resolved pursuant to the Change Order procedure set forth in Article 7. No adjustment in the Contract Time or Contract Sum shall be permitted, however, in connection with a concealed or unknown condition that does not differ materially from those conditions disclosed or that reasonably should have been disclosed by the Contractor's (1) prior inspections, tests, reviews, and preconstruction services for the Project, or (2) inspections, tests, reviews, and preconstruction services that the Contractor had the opportunity to make or should have performed in connection with the Project.

§ 3.7.5 If, in the course of the Work, the Contractor encounters human remains or recognizes the existence of burial markers, archaeological sites or wetlands not indicated in the Contract Documents, the Contractor shall immediately suspend any operations that would affect them and shall notify the Owner and Architect. Upon receipt of such notice, the Owner shall promptly take any action necessary to obtain governmental authorization required to resume the operations. The Contractor shall continue to suspend such operations until otherwise instructed by the Owner but

AIA Document A201™ – 2007. Copyright © 1911, 1915, 1918, 1925, 1937, 1951, 1958, 1961, 1963, 1966, 1970, 1976, 1987, 1997 and 2007 by The American Institute of Architects. **All rights reserved. WARNING: This AIA® Document is protected by U.S. Copyright Law and International Treaties. Unauthorized reproduction or distribution of this AIA® Document, or any portion of it, may result in severe civil and criminal penalties, and will be prosecuted to the maximum extent possible under the law.** This draft was produced by AIA software at 12:33:47 on 05/14/2009 under Order No.1000392252_1 which expires on 4/23/2010, and is not for resale.
User Notes: BRIDGE A201 Non-Homeownership (6-18-09) (6) (1111997498)

shall continue with all other operations that do not affect those remains or features. Requests for adjustments in the Contract Sum and Contract Time arising from the existence of such remains or features may be made as provided in Article 15.

§ 3.8 ALLOWANCES

§ 3.8.1 The Contractor shall include in the Contract Sum all allowances stated in the Contract Documents. Items covered by allowances shall be supplied for such amounts and by such persons or entities as the Owner may direct, but the Contractor shall not be required to employ persons or entities to whom the Contractor has reasonable objection.

§ 3.8.2 Unless otherwise provided in the Contract Documents,

- **.1** allowances shall cover the cost to the Contractor of materials and equipment delivered at the site and all required taxes, less applicable trade discounts;
- **.2** Contractor's costs for unloading and handling at the site, labor, installation costs, overhead, profit and other expenses contemplated for stated allowance amounts shall be included in the Contract Sum but not in the allowances; and
- **.3** whenever costs are more than or less than allowances, the Contract Sum shall be adjusted accordingly by Change Order. The amount of the Change Order shall reflect (1) the difference between actual costs and the allowances under Section 3.8.2.1 and (2) changes in Contractor's costs under Section 3.8.2.2.

§ 3.8.3 Materials and equipment under an allowance shall be selected by the Owner with reasonable promptness.

§ 3.9 SUPERINTENDENT

§ 3.9.1 The Contractor shall employ a competent superintendent and necessary assistants who shall be in attendance at the Project site during performance of the Work, including the work of all Subcontractors. The superintendent shall represent the Contractor, and communications given to the superintendent shall be as binding as if given to the Contractor~~.~~

§ 3.9.2 The Contractor, as soon as practicable after award of the Contract, shall furnish in writing to the Owner ~~through the Architect~~ the name and qualifications of a proposed superintendent. The Owner~~Architect~~ may reply within 14 days to the Contractor in writing stating (1) whether the Owner or the Architect has reasonable objection to the proposed superintendent or (2) that the Architect or Owner requires additional time to review. Failure of the Owner~~Architect~~ to reply within the 14 day period shall constitute notice of no reasonable objection.

§ 3.9.3 The Contractor shall not employ a proposed superintendent to whom the Owner or Architect has made reasonable and timely objection. The Contractor shall not change the superintendent without the Owner's prior written consent, which shall not unreasonably be withheld or delayed.

§ 3.10 CONTRACTOR'S CONSTRUCTION SCHEDULES

§ 3.10.1 ~~The Contractor, promptly after being awarded the Contract, shall prepare and submit for the Owner's and Architect's information a Contractor's construction schedule for the Work.~~ The Schedule is attached hereto as Exhibit B. The ~~schedule~~ Schedule shall not exceed time limits current under the Contract Documents~~.~~, To the extent applicable, the Schedule shall be revised at appropriate intervals as required by the conditions of the Work and Project, shall be related to the entire Project to the extent required by the Contract Documents, and shall provide for expeditious and practicable execution of the Work. Following the Owner's approval of such revisions to the Schedule, if any, such revisions shall be attached to and incorporated into, Exhibit B; provided, however, an extension to the Contract Time shall only be effective pursuant to a Change Order in accordance with Article 7.

§ 3.10.2 The Contractor shall prepare a submittal schedule, promptly after being awarded the Contract and thereafter as necessary to maintain a current submittal schedule, and shall submit the schedule(s) for the Architect's approval. The Architect's approval shall not unreasonably be delayed or withheld. The submittal schedule shall (1) be coordinated with the ~~Contractor's construction s~~Schedule, as amended in accordance with Section 3.10.1, and (2) allow the Architect reasonable time to review submittals. If the Contractor fails to submit a submittal schedule, the Contractor shall not be entitled to any increase in Contract Sum or extension of Contract Time based on the time required for review of submittals.

AIA Document A201™ – 2007. Copyright © 1911, 1915, 1918, 1925, 1937, 1951, 1958, 1961, 1963, 1966, 1970, 1976, 1987, 1997 and 2007 by The American Institute of Architects. **All rights reserved. WARNING: This AIA® Document is protected by U.S. Copyright Law and International Treaties. Unauthorized reproduction or distribution of this AIA® Document, or any portion of it, may result in severe civil and criminal penalties, and will be prosecuted to the maximum extent possible under the law.** This draft was produced by AIA software at 12:33:47 on 05/14/2009 under Order No.1000392252_1 which expires on 4/23/2010, and is not for resale.
User Notes: BRIDGE A201 Non-Homeownership (6-18-09) (6) (1111997498)

§ 3.10.3 The Contractor shall perform the Work in strict~~general~~ accordance with the Schedule attached hereto as Exhibit B, as may be amended pursuant to Section 3.10.1 and shall expedite the work if construction falls behind the dates and times set forth in the Schedule. The Contractor shall have the sole and exclusive responsibility for completing the Work according to the Schedule. Any proposed revisions to the Schedule shall be submitted by the Contractor pursuant to the Change Order procedure set forth in Article 7. If the Owner determines that the performance of the Work has not reached the level of completion set forth in the Schedule or the Contract Documents, the Owner shall have the right to require the Contractor to take all measures necessary to expedite the Work including but not limited to working additional shifts or overtime, supplying additional labor, equipment, facilities, and other similar measures. Such measures shall continue until the progress of the Work complies with the stage of completion required by the Contract Documents. The Owner's right to require such measures is solely for the purpose of ensuring Contractor compliance with the Schedule. The Contractor shall not be entitled to an adjustment in Contact Sum in connection with such measures required by the Owner. The Owner may exercise the rights furnished in this Section as frequently as Owner deems necessary to ensure that the Contractor's performance of the Work will comply with the Contract Time. ~~most recent schedules submitted to the Owner and Architect.~~

§ 3.11 DOCUMENTS AND SAMPLES AT THE SITE

The Contractor shall maintain at the site for the Owner one copy of the Drawings, Specifications, Addenda, Change Orders and other Modifications, in good order and marked currently to indicate field changes and selections made during construction, and one copy of approved Shop Drawings, Product Data, Samples and similar required submittals. These shall be available to the Architect and the Owner and shall be delivered to the ~~Architect for submittal to the~~ Owner upon completion of the Work as a record of the Work as constructed.

§ 3.12 SHOP DRAWINGS, PRODUCT DATA AND SAMPLES

§ 3.12.1 Shop Drawings are drawings, diagrams, schedules and other data specially prepared for the Work by the Contractor or a Subcontractor, Sub-subcontractor, manufacturer, supplier or distributor to illustrate some portion of the Work.

§ 3.12.2 Product Data are illustrations, standard schedules, performance charts, instructions, brochures, diagrams and other information furnished by the Contractor to illustrate materials or equipment for some portion of the Work.

§ 3.12.3 Samples are physical examples that illustrate materials, equipment or workmanship and establish standards by which the Work will be judged.

§ 3.12.4 Shop Drawings, Product Data, Samples and similar submittals are not Contract Documents. Their purpose is to demonstrate the way by which the Contractor proposes to conform to the information given and the design concept expressed in the Contract Documents for those portions of the Work for which the Contract Documents require submittals. Review by the Architect is subject to the limitations of Section 4.2.7. Informational submittals upon which the Architect is not expected to take responsive action may be so identified in the Contract Documents. Submittals that are not required by the Contract Documents may be returned by the Architect without action. The Contractor shall submit all Shop Drawings to Owner in the form of one good quality reproducible copy of each sheet plus one blueline print of each sheet.

§ 3.12.5 The Contractor shall review for compliance with the Contract Documents, approve and submit to the Architect Shop Drawings, Product Data, Samples and similar submittals required by the Contract Documents in accordance with the submittal schedule approved by the Architect or, in the absence of an approved submittal schedule, with reasonable promptness and in such sequence as to cause no delay in the Work or in the activities of the Owner or of separate contractors.

§ 3.12.6 By submitting Shop Drawings, Product Data, Samples and similar submittals, the Contractor represents to the Owner and Architect that the Contractor has (1) reviewed and approved them, (2) determined and verified materials, field measurements and field construction criteria related thereto, or will do so and (3) checked and coordinated the information contained within such submittals with the requirements of the Work and of the Contract Documents.

§ 3.12.7 The Contractor shall perform no portion of the Work for which the Contract Documents require submittal and review of Shop Drawings, Product Data, Samples or similar submittals until the respective submittal has been approved by the Architect and the Owner.

AIA Document A201™ – 2007. Copyright © 1911, 1915, 1918, 1925, 1937, 1951, 1958, 1961, 1963, 1966, 1970, 1976, 1987, 1997 and 2007 by The American Institute of Architects. **All rights reserved. WARNING: This AIA® Document is protected by U.S. Copyright Law and International Treaties. Unauthorized reproduction or distribution of this AIA® Document, or any portion of it, may result in severe civil and criminal penalties, and will be prosecuted to the maximum extent possible under the law.** This draft was produced by AIA software at 12:33:47 on 05/14/2009 under Order No.1000392252_1 which expires on 4/23/2010, and is not for resale.
User Notes: BRIDGE A201 Non-Homeownership (6-18-09) (6) (1111997498)

§ 3.12.8 The Work shall be in accordance with approved submittals except that the Contractor shall not be relieved of responsibility for deviations from requirements of the Contract Documents by the Architect's approval of Shop Drawings, Product Data, Samples or similar submittals unless the Contractor has specifically informed the Architect in writing of such deviation at the time of submittal and (1) the Architect has given written approval to the specific deviation as a minor change in the Work, or (2) a Change Order or Construction Change Directive has been issued authorizing the deviation. The Contractor shall not be relieved of responsibility for errors or omissions in Shop Drawings, Product Data, Samples or similar submittals by the Architect's approval thereof.

§ 3.12.9 The Contractor shall direct specific attention, in writing or on resubmitted Shop Drawings, Product Data, Samples or similar submittals, to revisions other than those requested by the Architect on previous submittals. In the absence of such written notice, the Architect's approval of a resubmission shall not apply to such revisions.

§ 3.12.10 The Contractor shall not be required to provide professional services that constitute the practice of architecture or engineering unless such services are specifically required by the Contract Documents for a portion of the Work or unless the Contractor needs to provide such services in order to carry out the Contractor's responsibilities for construction means, methods, techniques, sequences and procedures (such services are collectively referred to herein as the "Design-Build Work"). The components of the Work comprising the "Design Build Work" are more particularly described in Exhibit K. The Contractor shall not be required to provide professional services in violation of applicable law. In connection with the Design-Build Work, or if professional design services or certifications by a design professional related to systems, materials or equipment are specifically required of the Contractor by the Contract Documents, then the ~~Owner and the Architect will specify all performance and design criteria that such services must satisfy. The~~ Contractor shall cause such services or certifications to be provided by a properly licensed design professional~~, whose~~ pursuant to an agreement between the Contractor and such design professional meeting the requirements of Section 5.3. Such design professional shall be reasonably acceptable to the Owner and such design professional's signature and seal shall appear on all drawings, calculations, specifications, certifications, Shop Drawings and other submittals prepared by such professional. Shop Drawings and other submittals related to the Work designed or certified by such professional, if prepared by others, shall bear such professional's written approval when submitted to the Architect and shall comply with all Applicable Requirements. The Owner and the Architect shall be entitled to rely upon the adequacy, accuracy and completeness of the services, certifications and approvals performed or provided by such design professionals~~, provided the Owner and Architect have specified to the Contractor all performance and design criteria that such services must satisfy. Pursuant to this Section 3.12.10, the Architect will review, approve or take other appropriate action on submittals only for the limited purpose of checking for conformance with information given and the design concept expressed in the Contract Documents. The Contractor shall not be responsible for the adequacy of the performance and design criteria specified in the Contract Documents.~~

§ 3.13 USE OF SITE

The Contractor shall confine operations at the site to areas permitted by the Applicable Requirements ~~applicable laws, statutes, ordinances, codes, rules and regulations~~, and lawful orders of public authorities and the Contract Documents and shall not unreasonably encumber the site with materials or equipment.

§ 3.13.1 Only materials and equipment that are to be used directly in the Work shall be brought to and stored on the site by the Contractor. After equipment is no longer required for the Work, it shall be promptly removed from the site. Protection of construction materials and equipment stored at the Project site from weather, theft, damage, and all other adversity is solely the responsibility of the Contractor. The Contractor shall ensure that the Work, at all times, is performed in a manner that affords reasonable access, both vehicular and pedestrian, to the site of the Work and all adjacent areas. The Work shall be performed, to the fullest extent reasonably possible, in such manner that public areas adjacent to the site of the Work shall be free from all debris, building materials, and equipment likely to cause hazardous conditions.

§ 3.14 CUTTING AND PATCHING

§ 3.14.1 The Contractor shall be responsible for cutting, fitting or patching required to complete the Work or to make its parts fit together properly. All areas requiring cutting, fitting and patching shall be restored to the condition existing prior to the cutting, fitting and patching, unless otherwise required by the Contract Documents.

§ 3.14.2 The Contractor shall not damage or endanger a portion of the Work or fully or partially completed construction of the Owner or separate contractors by cutting, patching or otherwise altering such construction, or by excavation. The Contractor shall not cut or otherwise alter such construction by the Owner or a separate contractor

AIA Document A201™ – 2007. Copyright © 1911, 1915, 1918, 1925, 1937, 1951, 1958, 1961, 1963, 1966, 1970, 1976, 1987, 1997 and 2007 by The American Institute of Architects. **All rights reserved. WARNING: This AIA® Document is protected by U.S. Copyright Law and International Treaties. Unauthorized reproduction or distribution of this AIA® Document, or any portion of it, may result in severe civil and criminal penalties, and will be prosecuted to the maximum extent possible under the law.** This draft was produced by AIA software at 12:33:47 on 05/14/2009 under Order No.1000392252_1 which expires on 4/23/2010, and is not for resale.
User Notes: BRIDGE A201 Non-Homeownership (6-18-09) (6) (1111997498)

except with written consent of the Owner and of such separate contractor; such consent shall not be unreasonably withheld. The Contractor shall not unreasonably withhold from the Owner or a separate contractor the Contractor's consent to cutting or otherwise altering the Work.

§ 3.15 CLEANING UP

§ 3.15.1 The Contractor shall keep the premises and surrounding area free from accumulation of waste materials or rubbish caused by operations under the Contract. At completion of the Work, the Contractor shall remove waste materials, rubbish, the Contractor's tools, construction equipment, machinery and surplus materials from and about the Project. The Contractor shall clean all glass, replace all broken glass; remove stains, spots, dust and dirt from finished surfaces; clean all hardware; remove extraneous paint spots and smears from all surfaces; clean all fixtures; and wash all concrete.

§ 3.15.2 If the Contractor fails to clean up as provided in the Contract Documents, the Owner may do so and Owner shall be entitled to reimbursement from the Contractor, pursuant to a deductive Change Order, or otherwise.

§ 3.16 ACCESS TO WORK

The Contractor shall provide the Owner and Architect access to the Work in preparation and progress wherever located.

§ 3.17 ROYALTIES, PATENTS AND COPYRIGHTS

The Contractor shall pay all royalties and license fees. The Contractor shall defend suits or claims for infringement of copyrights and patent rights and shall hold the Owner and Architect harmless from loss on account thereof, but shall not be responsible for such defense or loss when a particular design, process or product of a particular manufacturer or manufacturers is required by the Contract Documents, or where the copyright violations are contained in Drawings, Specifications or other documents prepared by the Owner or Architect. However, if the Contractor has reason to believe that the required design, process or product is an infringement of a copyright or a patent, the Contractor shall be responsible for such loss unless such information is promptly furnished to the Architect.

§ 3.18 INDEMNIFICATION

§ 3.18.1 To the fullest extent permitted by law, and with the understanding that in no event shall this Section be construed to require indemnification by Contractor to a greater extent than that permitted under California law, Contractor agrees to indemnify, defend, and hold harmless Owner, and Owner's officers, directors, employees, agents, affiliates and Lenders to the Project (collectively, the "Indemnitees") from and against any and all losses, damages, liabilities, demands, expenses, costs, debts, causes of action, suits, penalties, fines, judgments, claims and liens (including mechanics' liens and stop notices), including attorneys' fees, consulting costs, and court costs (collectively, "Claims"), for injury (bodily injury and/or personal injury) to or death of persons (including, without limitation, any employee of Contractor or an Indemnitee), damage to property, including loss of, or loss of use of property, or other loss arising out of, or relating in any way, directly or indirectly, to: (i) the Work; (ii) Contractor's breach of or default of its obligations under the Contract Documents; or (iii) Contractor's or a Subcontractor's, or anyone directly or indirectly employed by them or anyone for whose acts they may be liable, presence, or activities conducted, in, at or about the Project. Contractor's obligations under this Section shall apply regardless of the nature of Contractor's conduct, acts or omissions. Actual or alleged negligence or fault on the part of Contractor is not a prerequisite to Indemnitees' rights to defense and indemnification hereunder. Contractor's obligations under this Section shall apply regardless of the passive or active negligence of Indemnitees and regardless of whether liability without fault is imposed or sought to be imposed on Indemnitees, except to the extent that such indemnity is void or otherwise unenforceable under applicable law in effect on or validly retroactive to the date of the Agreement. Contractor shall not be obligated to indemnify an Indemnitee to the extent it is determined by a court of competent jurisdiction that the Claim arises from the sole negligence or willful misconduct of the Indemnitee sought to be indemnified.

The Contractor's indemnity obligations under this Section 3.18.1 shall also specifically include, to the extent arising from acts of the Contractor, without limitation, all fines, penalties, damages, liability, costs, expenses (including, without limitation, reasonable attorneys' fees), and punitive damages (if any) arising out of or in connection with, any (i) violation of or failure to comply with any law, statute, ordinance, rule, regulation, code, or requirement of a public authority that bears upon the performance of the Work by the Contractor, a Subcontractor, or any person or entity for whom either is responsible, (ii) means, methods, procedures, techniques, or sequences of execution or performance of the Work, and (iii) failure to secure and pay for permits, fees, approvals, licenses, and inspections as

AIA Document A201™ – 2007. Copyright © 1911, 1915, 1918, 1925, 1937, 1951, 1958, 1961, 1963, 1966, 1970, 1976, 1987, 1997 and 2007 by The American Institute of Architects. **All rights reserved. WARNING: This AIA® Document is protected by U.S. Copyright Law and International Treaties. Unauthorized reproduction or distribution of this AIA® Document, or any portion of it, may result in severe civil and criminal penalties, and will be prosecuted to the maximum extent possible under the law.** This draft was produced by AIA software at 12:33:47 on 05/14/2009 under Order No.1000392252_1 which expires on 4/23/2010, and is not for resale.
User Notes: BRIDGE A201 Non-Homeownership (6-18-09) (6) (1111997498)

required under the Contract Documents, or any violation of any Applicable Requirement by the Contractor, a Subcontractor, or any person or entity for whom either is responsible.

~~The provisions of this Section 3.18 shall survive the termination or expiration of the Contract~~~~To the fullest extent permitted by law the Contractor shall indemnify and hold harmless the Owner, Architect, Architect's consultants, and agents and employees of any of them from and against claims, damages, losses and expenses, including but not limited to attorneys' fees, arising out of or resulting from performance of the Work, provided that such claim, damage, loss or expense is attributable to bodily injury, sickness, disease or death, or to injury to or destruction of tangible property (other than the Work itself), but only to the extent caused by the negligent acts or omissions of the Contractor, a Subcontractor, anyone directly or indirectly employed by them or anyone for whose acts they may be liable, regardless of whether or not such claim, damage, loss or expense is caused in part by a party indemnified hereunder. Such obligation shall not be construed to negate, abridge, or reduce other rights or obligations of indemnity which would otherwise exist as to a party or person described in this Section 3.18.~~

§ 3.18.2 In claims against any person or entity indemnified under this Section 3.18 by an employee of the Contractor, a Subcontractor, anyone directly or indirectly employed by them or anyone for whose acts they may be liable, the indemnification obligation under Section 3.18.1 shall not be limited by a limitation on amount or type of damages, compensation or benefits payable by or for the Contractor or a Subcontractor under workers' compensation acts, disability benefit acts or other employee benefit acts.

~~**§ 3.18.3** The Contractor's indemnity obligations under this Paragraph 3.18 shall also specifically include, to the extent arising from acts of the Contractor, without limitation, all fines, penalties, damages, liability, costs, expenses (including, without limitation, reasonable attorney's fees), and punitive damages (if any) arising out of or in connection with, any (i) violation of or failure to comply with any Applicable Requirement that bears upon the performance of the Work by the Contractor, a Subcontractor, or any person or entity from whom either is responsible, (ii) means, methods, procedures, techniques, or sequences of execution or performance of the Work, and (iii) failure to secure and pay for permits, fees, approvals, licenses, and inspections as required under the Contract Documents, or any violation of any permit or other approval of a public authority applicable to the Work, by the Contractor, a Subcontractor, or any person or entity for whom either is responsible~~.

§ 3.~~18.4~~18.3 The Contractor shall indemnify and hold harmless all of the persons or entities to be indemnified pursuant to Paragraph 3.18 from and against any costs and expenses (including reasonable attorney's fees) incurred by any of the indemnitees in enforcing any of the Contractor's defense, indemnity and hold harmless obligations under this Contract.

§ 3.18.~~4~~5 The provisions of this Section 3.18 shall survive the termination or expiration of the Contract.

ARTICLE 4 ARCHITECT

§ 4.1 GENERAL

§ 4.1.1 The Owner shall retain an architect lawfully licensed to practice architecture or an entity lawfully practicing architecture in the jurisdiction where the Project is located. That person or entity is identified as the Architect in the Agreement and is referred to throughout the Contract Documents as if singular in number. Any reference in the Contract Documents to the Architect's taking action or rendering a decision within a "reasonable time" is understood to mean no more than fourteen (14) days.

§ 4.1.2 Duties, responsibilities and limitations of authority of the Architect as set forth in the Contract Documents shall not be restricted, modified or extended without written consent of the Owner~~, Contractor~~ and Architect. Consent shall not be unreasonably withheld.

§ 4.1.3 If the employment of the Architect is terminated, the Owner shall employ a successor architect as to whom the Contractor has no reasonable objection and whose status under the Contract Documents shall be that of the Architect.

§ 4.2 ADMINISTRATION OF THE CONTRACT

§ 4.2.1 The Architect will provide administration of the Contract as described in the Contract Documents and will be an Owner's representative during construction until the later of: (i) the date the Architect issues the final Certificate f~~F~~or Payment or (ii) during the one-year period for the correction of Work, as applicable.. The Architect will have authority to act on behalf of the Owner only to the extent provided in the Contract Documents.

AIA Document A201™ – 2007. Copyright © 1911, 1915, 1918, 1925, 1937, 1951, 1958, 1961, 1963, 1966, 1970, 1976, 1987, 1997 and 2007 by The American Institute of Architects. **All rights reserved. WARNING: This AIA® Document is protected by U.S. Copyright Law and International Treaties. Unauthorized reproduction or distribution of this AIA® Document, or any portion of it, may result in severe civil and criminal penalties, and will be prosecuted to the maximum extent possible under the law.** This draft was produced by AIA software at 12:33:47 on 05/14/2009 under Order No.1000392252_1 which expires on 4/23/2010, and is not for resale.
User Notes: BRIDGE A201 Non-Homeownership (6-18-09) (6) (1111997498)

§ 4.2.2 The Architect will visit the site at intervals appropriate to the stage of construction, or as otherwise agreed with the Owner, to become generally familiar with the progress and quality of the portion of the Work completed, and to determine in general if the Work observed is being performed in a manner indicating that the Work, when fully completed, will be in accordance with the Contract Documents. However, the Architect will not be required to make exhaustive or continuous on-site inspections to check the quality or quantity of the Work. The Architect will not have control over, charge of, or responsibility for, the construction means, methods, techniques, sequences or procedures, or for the safety precautions and programs in connection with the Work, since these are solely the Contractor's rights and responsibilities under the Contract Documents, except as provided in Section 3.3.1 or if the Architect has included Specifications, designs or requirements in the Contract Documents governing the construction means, methods, techniques, sequences or safety precautions.

§ 4.2.3 On the basis of the site visits, the Architect will keep the Owner reasonably informed about the progress and quality of the portion of the Work completed, and report to the Owner (1) known deviations from the Contract Documents and from the most recent construction schedule submitted by the Contractor, and (2) defects and deficiencies observed in the Work. ~~The Architect will not be responsible for the Contractor's failure to perform the Work in accordance with the requirements of the Contract Documents. The Architect will not have control over or charge of and will not be responsible for acts or omissions of the Contractor, Subcontractors, or their agents or employees, or any other persons or entities performing portions of the Work.~~

§ 4.2.4 COMMUNICATIONS FACILITATING CONTRACT ADMINISTRATION

Communications by the Owner or the Architect and their representatives to Subcontractors and material suppliers shall generally by through the Contractor. The Owner or the Architect may communicate with Subcontractors to confirm information regarding Subcontractors provided to the Owner or the Architect by the Contractor. Communications by and with separate contractors shall be through the Owner or the Architect.~~Except as otherwise provided in the Contract Documents or when direct communications have been specially authorized, the Owner and Contractor shall endeavor to communicate with each other through the Architect about matters arising out of or relating to the Contract. Communications by and with the Architect's consultants shall be through the Architect. Communications by and with Subcontractors and material suppliers shall be through the Contractor. Communications by and with separate contractors shall be through the Owner.~~

§ 4.2.5 Based on the Architect's evaluations of the Work and Contractor's Applications for Payment, ~~the Architect will review and certify the amounts due the Contractor's Applications for Payment,~~ the Architect will review the Contractor's draft Certificates for Payment and make recommendations to the Owner regarding amounts due to the Contractor. ~~and will issue Certificates for Payment in such amounts.~~

§ 4.2.6 The Owner or the Architect, subject to the consent of the Owner, have~~s~~ authority to reject Work that does not conform to the Contract Documents. ~~Whenever the Architect considers it necessary or advisable, the Architect will have authority to require~~ The Owner or the Architect, with the consent of the Owner, may require additional inspection or testing of the Work in accordance with Sections 13.5.2 and 13.5.3, whether or not such Work is fabricated, installed or completed. ~~However, neither this authority of the Architect nor a decision made in good faith either to exercise or not to exercise such authority shall give rise to a duty or responsibility of the Architect or the Owner to the Contractor, Subcontractors, material and equipment suppliers, their agents or employees, or other persons or entities performing portions of the Work.~~

§ 4.2.7 The Architect will review and approve, or take other appropriate action upon, the Contractor's submittals such as Shop Drawings, Product Data and Samples, but only for the limited purpose of checking for conformance with information given and the design concept expressed in the Contract Documents. The Architect's action will be taken in accordance with the submittal schedule approved by the Architect or, in the absence of an approved submittal schedule, with reasonable promptness while allowing sufficient time in the Architect's professional judgment to permit adequate review. Review of such submittals is not conducted for the purpose of determining the accuracy and completeness of other details such as dimensions and quantities, or for substantiating instructions for installation or performance of equipment or systems, all of which remain the responsibility of the Contractor as required by the Contract Documents. The Architect's review of the Contractor's submittals shall not relieve the Contractor of the obligations under Sections 3.3, 3.5 and 3.12. The Architect's review shall not constitute approval of safety precautions or, unless otherwise specifically stated by the Architect, of any construction means, methods, techniques, sequences or procedures. The Architect's approval of a specific item shall not indicate approval of an

AIA Document A201™ – 2007. Copyright © 1911, 1915, 1918, 1925, 1937, 1951, 1958, 1961, 1963, 1966, 1970, 1976, 1987, 1997 and 2007 by The American Institute of Architects. **All rights reserved. WARNING: This AIA® Document is protected by U.S. Copyright Law and International Treaties. Unauthorized reproduction or distribution of this AIA® Document, or any portion of it, may result in severe civil and criminal penalties, and will be prosecuted to the maximum extent possible under the law.** This draft was produced by AIA software at 12:33:47 on 05/14/2009 under Order No.1000392252_1 which expires on 4/23/2010, and is not for resale.
User Notes: BRIDGE A201 Non-Homeownership (6-18-09) (6) (1111997498)

assembly of which the item is a component. The Contractor shall pay for the cost of the Architect's review if the review indicates that Contractor's submittal is repeatedly not in conformance with the Contract Documents.

§ 4.2.8 The Architect will prepare ~~Change Orders and~~ Construction Change Directives, and may authorize minor changes in the Work as provided in Section 7.4. The Architect will investigate and make determinations and recommendations regarding concealed and unknown conditions as provided in Section 3.7.4.

§ 4.2.9 The Architect will conduct inspections to determine the date or dates of Substantial Completion and the date of final completion; issue Certificates of Substantial Completion pursuant to Section 9.8; receive and forward to the Owner, for the Owner's review and records, written warranties and related documents required by the Contract and assembled by the Contractor pursuant to Section 9.10; and will subject to the Owner's review, approve ~~issue~~ a final Certificate for Payment pursuant to Section 9.10.

§ 4.2.10 If the Owner and Architect agree, the Architect will provide one or more project representatives to assist in carrying out the Architect's responsibilities at the site. The duties, responsibilities and limitations of authority of such project representatives shall be as set forth in an exhibit to be incorporated in the Contract Documents.

§ 4.2.11 The Architect will interpret and ~~decide~~ make recommendations on matters concerning performance under, and requirements of, the Contract Documents on written request of either the Owner or Contractor. The Architect's response to such requests will be made in writing within any time limits agreed upon or otherwise with reasonable promptness.

§ 4.2.12 Interpretations and ~~decisions~~ recommendations of the Architect will be consistent with the intent of, and reasonably inferable from, the Contract Documents and will be in writing or in the form of drawings. ~~When making such interpretations and decisions, the Architect will endeavor to secure faithful performance by both Owner and Contractor, will not show partiality to either and will not be liable for results of interpretations or decisions rendered in good faith.~~

§ 4.2.13 The Architect's decisions on matters relating to aesthetic effect, in connection with administration of the Contract will be final if consistent with the intent expressed in the Contract Documents.

§ 4.2.14 The Architect will review and respond to requests for information about the Contract Documents. The Architect's response to such requests will be made in writing within any time limits agreed upon or otherwise with reasonable promptness. If appropriate, the Architect will prepare and issue supplemental Drawings and Specifications in response to the requests for information.

ARTICLE 5 SUBCONTRACTORS

§ 5.1 DEFINITIONS

§ 5.1.1 A Subcontractor is a person or entity who has a direct contract with the Contractor to perform a portion of the Work at the site, including, but not limited to, any entity described in Section 3.12.10. The term "Subcontractor" is referred to throughout the Contract Documents as if singular in number and means a Subcontractor or an authorized representative of the Subcontractor. The term "Subcontractor" does not include a separate contractor or subcontractors of a separate contractor.

§ 5.1.2 A Sub-subcontractor is a person or entity who has a direct or indirect contract with a Subcontractor to perform a portion of the Work at the site, including, but not limited to, any entity described in Section 3.12.10. The term "Sub-subcontractor" is referred to throughout the Contract Documents as if singular in number and means a Sub-subcontractor or an authorized representative of the Sub-subcontractor.

§ 5.2 AWARD OF SUBCONTRACTS AND OTHER CONTRACTS FOR PORTIONS OF THE WORK

§ 5.2.1 The Contractor shall select all Subcontractors, and in connection with such selection shall provide the Owner with a draft copy of its form subcontract, and disclose to the Owner the name, trade, and subcontract amounts for each subcontractor prior to the commencement of the Work. Subcontractors shall have the required licenses and expertise necessary to perform the proposed subcontract work. Unless otherwise stated in the Contract Documents or the bidding requirements, the Contractor, as soon as practicable after award of the Contract, but in any event prior to entering into a contract with a proposed subcontractor, shall furnish in writing to the Owner through the Architect the names of persons or entities (including those who are to furnish materials or equipment fabricated to a special design) proposed for each principal portion of the Work. The Architect may reply within 14 days to the Contractor

AIA Document A201™ – 2007. Copyright © 1911, 1915, 1918, 1925, 1937, 1951, 1958, 1961, 1963, 1966, 1970, 1976, 1987, 1997 and 2007 by The American Institute of Architects. **All rights reserved. WARNING: This AIA® Document is protected by U.S. Copyright Law and International Treaties. Unauthorized reproduction or distribution of this AIA® Document, or any portion of it, may result in severe civil and criminal penalties, and will be prosecuted to the maximum extent possible under the law.** This draft was produced by AIA software at 12:33:47 on 05/14/2009 under Order No.1000392252_1 which expires on 4/23/2010, and is not for resale.
User Notes: BRIDGE A201 Non-Homeownership (6-18-09) (6) (1111997498)

in writing stating (1) whether the Owner or the Architect has reasonable objection to any such proposed person or entity or (2) that the Architect requires additional time for review. Failure of the Owner or Architect to reply within the 14 day period shall constitute notice of no reasonable objection. If any contract between the Contractor and a Subcontractor is materially altered so that it differs from the form subcontract provided to the Owner with regard to terms other than (1) the description of the Work to be performed pursuant to the subcontract, and (2) the subcontract price, that subcontract shall be submitted to Owner for its review prior to the commencement of the Work. The Owner's review of any subcontract shall not limit or otherwise impair Contractor's obligations to require each subcontract to comply with the Contract Documents. Review by the Owner, if any, shall in no way be deemed to be a representation by the Owner that the subcontract complies with the Contract Documents, or the enforceability or business advantage of the subcontract. Contractor shall assure all subcontracts contain the Lender requirements attached as an Exhibit to the Contract.

§ 5.2.2 The Contractor shall not contract with a proposed person or entity to whom the Owner or Architect has made reasonable and timely objection. The Contractor shall not be required to contract with anyone to whom the Contractor has made reasonable objection.

§ 5.2.3 If the Owner ~~or Architect~~ has reasonable objection to a person or entity proposed by the Contractor, the Contractor shall propose another to whom the Owner ~~or Architect~~ has no reasonable objection. If the proposed but rejected Subcontractor was reasonably capable of performing the Work, the Contract Sum and Contract Time shall be increased or decreased by the difference, if any, occasioned by such change, and an appropriate Change Order shall be issued before commencement of the substitute Subcontractor's Work. However, no increase in the Contract Sum or Contract Time shall be allowed for such change unless the Contractor has acted promptly and responsively in submitting names as required.

§ 5.2.4 The Contractor shall not substitute a Subcontractor, person or entity previously selected if the Owner or Architect makes reasonable objection to such substitution.

§ 5.3 SUBCONTRACTUAL RELATIONS

By appropriate agreement, written where legally required for validity, the Contractor shall require each Subcontractor, to the extent of the Work to be performed by the Subcontractor, to be bound to the Contractor by terms of the Contract Documents, and to assume toward the Contractor all the obligations and responsibilities, including the responsibility for safety of the Subcontractor's Work, which the Contractor, by these Documents, assumes toward the Owner and Architect. Each subcontract agreement shall preserve and protect the rights of the Owner and Architect under the Contract Documents with respect to the Work to be performed by the Subcontractor so that subcontracting thereof will not prejudice such rights, and shall allow to the Subcontractor, unless specifically provided otherwise in the subcontract agreement, the benefit of all rights, remedies and redress against the Contractor that the Contractor, by the Contract Documents, has against the Owner. Where appropriate, the Contractor shall require each Subcontractor to enter into similar agreements with Sub-subcontractors. The Contractor shall make available to each proposed Subcontractor, prior to the execution of the subcontract agreement, copies of the Contract Documents to which the Subcontractor will be bound, and, upon written request of the Subcontractor, identify to the Subcontractor terms and conditions of the proposed subcontract agreement that may be at variance with the Contract Documents. Subcontractors will similarly make copies of applicable portions of such documents available to their respective proposed Sub-subcontractors. Any part of the Work performed for the Contractor by a Subcontractor shall be pursuant to a written subcontract between the Contractor and such Subcontractor, consistent with the requirements of this Contract. Each subcontract shall, among other matters:

.1 Require that the Work be performed in accordance with the requirements of the Contract Documents;

.2 Require the Subcontractor to carry and maintain liability insurance in accordance with the Contract Documents;

.3 Require the Subcontractor to furnish such certificates and waivers, including waivers of mechanic's lien rights, as the Lender or the Owner may reasonably request; and

.4 Require the Subcontractor to cooperate with the Lender to the Work to the same extent as the Contractor is required to cooperate with the Lender according to the Contract Documents; and

AIA Document A201™ – 2007. Copyright © 1911, 1915, 1918, 1925, 1937, 1951, 1958, 1961, 1963, 1966, 1970, 1976, 1987, 1997 and 2007 by The American Institute of Architects. **All rights reserved. WARNING: This AIA® Document is protected by U.S. Copyright Law and International Treaties. Unauthorized reproduction or distribution of this AIA® Document, or any portion of it, may result in severe civil and criminal penalties, and will be prosecuted to the maximum extent possible under the law.** This draft was produced by AIA software at 12:33:47 on 05/14/2009 under Order No.1000392252_1 which expires on 4/23/2010, and is not for resale.
User Notes: BRIDGE A201 Non-Homeownership (6-18-09) (6) (1111997498)

.5 Shall specifically provide that the Owner is an intended third-party beneficiary of such subcontract and that the Subcontractor recognizes the rights of the Owner under Section 5.4 below.

Formatted: Indent: Left: 0.5", Hanging: 0.33"

§ 5.4 CONTINGENT ASSIGNMENT OF SUBCONTRACTS

§ 5.4.1 Each subcontract agreement for a portion of the Work is assigned by the Contractor to the Owner, provided that

.1 assignment is effective only after termination of the Contract by the Owner for cause pursuant to Section 14.2 and only for those subcontract agreements that the Owner accepts by notifying the Subcontractor and Contractor in writing; and

.2 assignment is subject to the prior rights of the surety, if any, obligated under bond relating to the Contract.

~~When~~ If the Owner accepts the assignment of a subcontract agreement as set forth above, then, the Owner assumes the Contractor's rights and obligations under the subcontract.

§ 5.4.2 Upon acceptance of such assignment by the Owner, if the Work has been suspended for more than 30 days after termination of the Contract by the Owner pursuant to Section 14.2 below, the Subcontractor's compensation shall be equitably adjusted for increases in direct costs incurred by such Subcontractor as a result of the suspension.~~cost resulting from the suspension.~~

§ 5.4.3 Upon acceptance of such assignment ~~to~~ by the Owner under this Section 5.4, the Owner may further assign the subcontract to a successor contractor or other entity. If the Owner assigns the subcontract to a successor contractor or other entity, the Owner shall nevertheless remain legally responsible for all of the successor contractor's obligations under the subcontract except is Owner obtains a release from the applicable Subcontractor.

§ 5.4.4 Each subcontract shall specifically provide that the Owner shall only be responsible to the Subcontractor for those obligations of the Contractor that accrue subsequent to the Owner's exercise of any rights under this conditional assignment.

ARTICLE 6 CONSTRUCTION BY OWNER OR BY SEPARATE CONTRACTORS

§ 6.1 OWNER'S RIGHT TO PERFORM CONSTRUCTION AND TO AWARD SEPARATE CONTRACTS

§ 6.1.1 The Owner reserves the right to perform construction or operations related to the Project with the Owner's own forces, and to award separate contracts in connection with other portions of the Project or other construction or operations on the site under Conditions of the Contract identical or substantially similar to these including those portions related to insurance and waiver of subrogation. If the Contractor claims that delay or additional cost is involved because of such action by the Owner, the Contractor shall make such Claim as provided in Article 15.

§ 6.1.2 When separate contracts are awarded for different portions of the Project or other construction or operations on the site, the term "Contractor" in the Contract Documents in each case shall mean the Contractor who executes each separate Owner-Contractor Agreement.

§ 6.1.3 The Owner shall provide for coordination of the activities of the Owner's own forces and of each separate contractor with the Work of the Contractor. The Contractor shall do its utmost to cooperate with each separate contractor and shall coordinate its construction schedule with the schedules of the other contractors and the Owner to expedite the timely completion of the Work.~~, who shall cooperate with them. The Contractor shall participate with other separate contractors and the Owner in reviewing their construction schedules.~~ The Contractor shall make any revisions to the construction schedule deemed necessary after a joint review and mutual agreement. The construction schedules shall then constitute the schedules to be used by the Contractor, separate contractors and the Owner until subsequently revised.

§ 6.1.4 Unless otherwise provided in the Contract Documents, when the Owner performs construction or operations related to the Project with the Owner's own forces, the Owner shall be deemed to be subject to the same obligations and to have the same rights that apply to the Contractor under the Conditions of the Contract, including, without excluding others, those stated in Article 3, this Article 6 and Articles 10, 11 and 12.

AIA Document A201™ – 2007. Copyright © 1911, 1915, 1918, 1925, 1937, 1951, 1958, 1961, 1963, 1966, 1970, 1976, 1987, 1997 and 2007 by The American Institute of Architects. **All rights reserved. WARNING: This AIA® Document is protected by U.S. Copyright Law and International Treaties. Unauthorized reproduction or distribution of this AIA® Document, or any portion of it, may result in severe civil and criminal penalties, and will be prosecuted to the maximum extent possible under the law.** This draft was produced by AIA software at 12:33:47 on 05/14/2009 under Order No.1000392252_1 which expires on 4/23/2010, and is not for resale.
User Notes: BRIDGE A201 Non-Homeownership (6-18-09) (6) (1111997498)

§ 6.2 MUTUAL RESPONSIBILITY

§ 6.2.1 The Contractor shall afford the Owner and separate contractors reasonable opportunity for introduction and storage of their materials and equipment and performance of their activities, and shall connect and coordinate the Contractor's construction and operations with theirs as required by the Contract Documents.

§ 6.2.2 If part of the Contractor's Work depends for proper execution or results upon construction or operations by the Owner or a separate contractor, the Contractor shall, prior to proceeding with that portion of the Work, promptly report to the Architect ~~apparent~~ known discrepancies or defects in such other construction that would render it unsuitable for such proper execution and results. Failure of the Contractor so to report shall constitute an acknowledgment that the Owner's or separate contractor's completed or partially completed construction is fit and proper to receive the Contractor's Work, except as to defects not then reasonably discoverable.

§ 6.2.3 The Contractor shall reimburse the Owner for costs the Owner incurs that are payable to a separate contractor because of the Contractor's delays, improperly timed activities or defective construction. The Owner shall be responsible to the Contractor for costs the Contractor incurs because of a separate contractor's delays, improperly timed activities, damage to the Work or defective construction.

§ 6.2.4 The Contractor shall promptly remedy damage the Contractor wrongfully causes to completed or partially completed construction or to property of the Owner or separate contractors as provided in Section 10.2.5.

§ 6.2.5 The Owner and each separate contractor shall have the same responsibilities for cutting and patching as are described for the Contractor in Section 3.14.

§ 6.3 OWNER'S RIGHT TO CLEAN UP

If a dispute arises among the Contractor, separate contractors and the Owner as to the responsibility under their respective contracts for maintaining the premises and surrounding area free from waste materials and rubbish, the Owner may clean up and the Architect will allocate the cost among those responsible.

ARTICLE 7 CHANGES IN THE WORK

§ 7.1 GENERAL

§ 7.1.1 Changes in the Work may be accomplished after execution of the Contract, and without invalidating the Contract, by Change Order, Construction Change Directive or order for a minor change in the Work, subject to the limitations stated in this Article 7 and elsewhere in the Contract Documents.

§ 7.1.2 Notwithstanding any provision to the contrary in the Contract Documents, a Change Order shall be based upon agreement among the Owner or the Owner's authorized representative, the Contractor and the Lender to the Work, as applicable. Failure of the Lender to the Work to approve a Change Order shall not be grounds for finding any party to this Contract in default. A Construction Change Directive issued by the Owner may or may not be agreed to by the Contractor. When submitting its proposed Change Order, the Contractor shall include a detailed breakdown of the impact of the proposed change on the cost of labor, materials, and the Schedule, and shall furnish documentation regarding the proposed Change Order, including spreadsheets upon request of the Owner or Architect. The Contractor shall submit Change Orders within fourteen (14) days of the date the Contractor discovers the circumstances giving rise to the Change Order request.~~A Change Order shall be based upon agreement among the Owner, Contractor and Architect; a Construction Change Directive requires agreement by the Owner and Architect and may or may not be agreed to by the Contractor; an order for a minor change in the Work may be issued by the Architect alone.~~

§ 7.1.3 Changes in the Work shall be performed under applicable provisions of the Contract Documents, and the Contractor shall proceed promptly, unless otherwise provided in the Change Order, Construction Change Directive or order for a minor change in the Work.

§ 7.1.4 Notwithstanding any provision to the contrary in the Contract Documents, no Change in the Work, whether by way of alteration or addition to the Work, shall be the basis for an addition to the Contract Sum or a change in the Contract Time unless and until such alteration or addition has been authorized by a Change Order or Construction Change Directive executed and issued in accordance with an in strict compliance with the requirements of the Contract Documents.

AIA Document A201™ – 2007. Copyright © 1911, 1915, 1918, 1925, 1937, 1951, 1958, 1961, 1963, 1966, 1970, 1976, 1987, 1997 and 2007 by The American Institute of Architects. **All rights reserved. WARNING: This AIA® Document is protected by U.S. Copyright Law and International Treaties. Unauthorized reproduction or distribution of this AIA® Document, or any portion of it, may result in severe civil and criminal penalties, and will be prosecuted to the maximum extent possible under the law.** This draft was produced by AIA software at 12:33:47 on 05/14/2009 under Order No.1000392252_1 which expires on 4/23/2010, and is not for resale.
User Notes: BRIDGE A201 Non-Homeownership (6-18-09) (6) (1111997498)

This requirement is of the essence o the Contract Documents. Accordingly, in the absence of an executed Change Order, no (1) course of conduct or dealings between the parties, nor (2) express or implied acceptance of alterations or additions to the Work, nor (3) any claims that the Owner has been unjustly enriched by any alterations or additions to the Work (whether or not there is in fact any such unjust enrichment) shall be the basis for any claim by the Contractor to increase the Contract Sum or to change the Contract Time. All Change Orders shall be final and bindings on the Owner and the Contractor

§ 7.2 CHANGE ORDERS

§ 7.2.1 A Change Order is a written instrument prepared by the ~~Architect and signed by the Owner,~~ Contractor and signed by the Owner and the Contractor~~Architect~~ stating their agreement upon all of the following:

- **.1** The change in the Work;
- **.2** The amount of the adjustment, if any, in the Contract Sum; and
- **.3** The extent of the adjustment, if any, in the Contract Time.

§ 7.2.2 Agreement on any Change Order shall constitute a final settlement of all matters relating to the change in the Work that is the subject of the Change Order, including, but not limited to, all direct and indirect costs associated with such change and any and all adjustments to the Contract Sum and the Contract Time.

Formatted: AIA Body Text Indented

§ 7.3 CONSTRUCTION CHANGE DIRECTIVES

§ 7.3.1 A Construction Change Directive is a written order prepared by the Architect and signed by the Owner and Architect, directing a change in the Work prior to agreement on adjustment, if any, in the Contract Sum or Contract Time, or both. The Owner may by Construction Change Directive, without invalidating the Contract, order changes in the Work within the general scope of the Contract consisting of additions, deletions or other revisions, the Contract Sum and Contract Time being adjusted accordingly.

§ 7.3.2 A Construction Change Directive shall be used in the absence of total agreement on the terms of a Change Order.

§ 7.3.3 If the Construction Change Directive provides for an adjustment to the Contract Sum, the adjustment shall be based on one of the following methods:

- **.1** Mutual acceptance of a lump sum properly itemized and supported by sufficient substantiating data to permit evaluation;
- **.2** Unit prices stated in the Contract Documents or subsequently agreed upon;
- **.3** Cost to be determined in a manner agreed upon by the parties and a mutually acceptable fixed or percentage fee; or
- **.4** As provided in Section 7.3.7.

§ 7.3.4 If unit prices are stated in the Contract Documents or subsequently agreed upon, and if quantities originally contemplated are materially changed in a proposed Change Order or Construction Change Directive so that application of such unit prices to quantities of Work proposed will cause substantial inequity to the Owner or Contractor, the applicable unit prices shall be equitably adjusted.

§ 7.3.5 Upon receipt of a Construction Change Directive, the Contractor shall promptly proceed with the change in the Work involved and advise the Architect and the Owner of the Contractor's agreement or disagreement with the method, if any, provided in the Construction Change Directive for determining the proposed adjustment in the Contract Sum or Contract Time.

§ 7.3.6 A Construction Change Directive signed by the Contractor indicates the Contractor's agreement therewith, including adjustment in Contract Sum and Contract Time or the method for determining them. Such agreement shall be effective immediately and shall be recorded as a Change Order.

§ 7.3.7 If the Contractor does not respond promptly or disagrees with the method for adjustment in the Contract Sum, the Architect and the Owner shall determine the method and the adjustment on the basis of reasonable expenditures and savings of those performing the Work attributable to the change, including, in case of an increase in the Contract Sum, an amount for overhead and profit as set forth in the Agreement, or if no such amount is set forth in the Agreement, a reasonable amount. In such case, and also under Section 7.3.3.3, the Contractor shall keep and present, in such form as the Architect and the Owner may prescribe, an itemized accounting together with appropriate

AIA Document A201™ – 2007. Copyright © 1911, 1915, 1918, 1925, 1937, 1951, 1958, 1961, 1963, 1966, 1970, 1976, 1987, 1997 and 2007 by The American Institute of Architects. **All rights reserved. WARNING: This AIA® Document is protected by U.S. Copyright Law and International Treaties. Unauthorized reproduction or distribution of this AIA® Document, or any portion of it, may result in severe civil and criminal penalties, and will be prosecuted to the maximum extent possible under the law.** This draft was produced by AIA software at 12:33:47 on 05/14/2009 under Order No.1000392252_1 which expires on 4/23/2010, and is not for resale.
User Notes: BRIDGE A201 Non-Homeownership (6-18-09) (6) (1111997498)

supporting data. Unless otherwise provided in the Contract Documents, costs for the purposes of this Section 7.3.7 shall be limited to the following:

.1 Costs of labor, including social security, old age and unemployment insurance, fringe benefits required by agreement or custom, and workers' compensation insurance;

.2 Costs of materials, supplies and equipment, including cost of transportation, whether incorporated or consumed;

.3 Rental costs of machinery and equipment, exclusive of hand tools, whether rented from the Contractor or others;

.4 Costs of premiums for all bonds and insurance, permit fees, and sales, use or similar taxes related to the Work; and

.5 Additional costs of supervision and field office personnel directly attributable to the change.

§ 7.3.8 The amount of credit to be allowed by the Contractor to the Owner for a deletion or change that results in a net decrease in the Contract Sum shall be actual net cost as confirmed by the Architect. When both additions and credits covering related Work or substitutions are involved in a change, the allowance for overhead and profit shall be figured on the basis of net increase, if any, with respect to that change.

§ 7.3.9 Pending final determination of the total cost of a Construction Change Directive to the Owner, the Contractor may request payment for Work completed under the Construction Change Directive in Applications for Payment. The Architect will make an interim determination for purposes of monthly certification for payment for those costs and certify for payment the amount that the Architect determines, in the Architect's professional judgment, to be reasonably justified. The Architect's interim determination of cost shall adjust the Contract Sum on the same basis as a Change Order, subject to the right of either party to disagree and assert a Claim in accordance with Article 15.

§ 7.3.10 When the Owner and Contractor agree with a determination made by the Architect concerning the adjustments in the Contract Sum and Contract Time, or otherwise reach agreement upon the adjustments, such agreement shall be effective immediately and ~~the Architect will prepare a~~shall be documented by preparation and execution of an appropriate Change Order. Change Orders may be issued for all or any part of a Construction Change Directive.

§ 7.3.11 Notwithstanding any other provisions of the Contract Documents, with regard to any Claim by the Contractor for increased overhead and profit based upon work to be performed pursuant to a Change Order or Construction Change Directive, such Claim for increased overhead and profit shall be based upon documented overhead expenses and shall be consistent with the provisions of the Contract Documents concerning the Contractor's Fee. Such amount, if any, shall include all times of expense not specifically designated in direct costs of the Work, but will not be increased unless directly attributable to the change. When both additions and credits are involved in any one change, the allowance for overhead and profit shall be figured on the basis of the net increase if any.

§ 7.4 MINOR CHANGES IN THE WORK

The Architect has authority to order minor changes in the Work not involving adjustment in the Contract Sum or extension of the Contract Time and not inconsistent with the intent of the Contract Documents and if the Owner does not object to the change in advance of the issuance of the order. Such changes will be effected by written order signed by the Architect and shall be binding on the Owner and Contractor.

ARTICLE 8 TIME

§ 8.1 DEFINITIONS

§ 8.1.1 Unless otherwise provided, Contract Time is the period of time, including authorized adjustments, allotted in the Contract Documents for Substantial Completion of the Work.

§ 8.1.2 The date of commencement of the Work is the date established in the Agreement.

§ 8.1.3 The date of Substantial Completion is the date set forth on the Certificate of Substantial Completion certified by the Architect and signed by the Owner ~~certified by the Architect~~ in accordance with Section 9.8.

§ 8.1.4 The term "day" as used in the Contract Documents shall mean calendar day unless otherwise specifically defined.

AIA Document A201™ – 2007. Copyright © 1911, 1915, 1918, 1925, 1937, 1951, 1958, 1961, 1963, 1966, 1970, 1976, 1987, 1997 and 2007 by The American Institute of Architects. **All rights reserved. WARNING: This AIA® Document is protected by U.S. Copyright Law and International Treaties. Unauthorized reproduction or distribution of this AIA® Document, or any portion of it, may result in severe civil and criminal penalties, and will be prosecuted to the maximum extent possible under the law.** This draft was produced by AIA software at 12:33:47 on 05/14/2009 under Order No.1000392252_1 which expires on 4/23/2010, and is not for resale.
User Notes: BRIDGE A201 Non-Homeownership (6-18-09) (6) (1111997498)

§ 8.2 PROGRESS AND COMPLETION

§ 8.2.1 Time limits stated in the Contract Documents are of the essence of the Contract. By executing the Agreement the Contractor has accounted for and anticipated foreseeable delays (including, but not limited to, delays due to weather) and confirms that the Contract Time is a reasonable period for performing the Work.

§ 8.2.2 The Contractor shall not knowingly, except by agreement or instruction of the Owner in writing, prematurely commence operations on the site or elsewhere prior to the effective date of insurance required by Article 11 to be furnished by the Contractor and Owner. The date of commencement of the Work shall not be changed by the effective date of such insurance. Unless the date of commencement is established by the Contract Documents or a notice to proceed given by the Owner, the Contractor shall notify the Owner in writing not less than five days or other agreed period before commencing the Work to permit the timely filing of mortgages, mechanic's liens and other security interests.

§ 8.2.3 The Contractor shall proceed expeditiously with adequate forces and shall achieve Substantial Completion within the Contract Time.

§ 8.3 DELAYS AND EXTENSIONS OF TIME

§ 8.3.1 The Contract Time shall be extended by Change Order for each day the Contractor is delayed in the commencement or progress of the Work provided that the Contractor demonstrates that the following conditions have been met:~~If the Contractor is delayed at any time in the commencement or progress of the Work by an act or neglect of the Owner or Architect, or of an employee of either, or of a separate contractor employed by the Owner; or by changes ordered in the Work; or by labor disputes, fire, unusual delay in deliveries, unavoidable casualties or other causes beyond the Contractor's control; or by delay authorized by the Owner pending mediation and arbitration; or by other causes that the Architect determines may justify delay, then the Contract Time shall be extended by Change Order for such reasonable time as the Architect may determine.~~

.1 at the time that the event causing the delay commences, the Contractor is in compliance with the Contract Documents and has provided the Owner with an update to the Schedule;

.2 the delay will prevent the Contractor from achieving substantial completion within the Contract Time;

.3 performance of the Work is not, was not, or would not have been delayed by any other cause for which the Contractor is not entitled to an extension in the Contract Time under the Contract Documents;

.4 the delay is not caused, or could not have been anticipated, by the Contractor;

.5 the delay could not be limited or avoided by the Contractor's timely notice to the Owner of the delay or reasonable likelihood that the delay would occur;

.6 the delay is of a duration of more than one day; and

.7 the delay is caused by: (i) labor disputes, fire, acts of the public enemy, unavoidable casualties or other similar causes beyond the Contractor's control; (ii) unknown physical site conditions which could not have been ascertainable from an inspection of the site, from information available from the local municipality and other public bodies or from the Contract Documents; (iii) errors or omissions in the Plans and Specifications; (iv) the Owner's decision to suspend the Work unless such decision is the result of a breach by the Contractor of its obligations under the Contract Documents; (v) the failure of the Owner to timely perform any Contract obligation unless such failure is the result of a breach by the Contractor of its obligations under the Contract Documents; or (vi) the Owner's decision to materially change the scope of the Work unless such decision is the result of a breach by the Contractor of its obligations under the Contract Documents.

Formatted: Default Paragraph Font

Formatted: Font: Arial Narrow

Formatted: Indent: Left: 0.25", Hanging: 0.25"

§ 8.3.2 Claims relating to time shall be made in accordance with applicable provisions of Article 15.

§ 8.3.3 Notwithstanding anything to the contrary in the Contract Documents, an extension in the Contract Time, to the extent permitted under Subparagraph 8.3.1 shall be the sole remedy of the Contractor for any (1) delay in the commencement, prosecution, or completion of the Work, (2) hindrance of obstruction in the performance of the Work, (3) loss of productivity, or (4) other similar claims (collectively referred to in this Subparagraph 8.3.3 as

AIA Document A201™ – 2007. Copyright © 1911, 1915, 1918, 1925, 1937, 1951, 1958, 1961, 1963, 1966, 1970, 1976, 1987, 1997 and 2007 by The American Institute of Architects. **All rights reserved. WARNING: This AIA® Document is protected by U.S. Copyright Law and International Treaties. Unauthorized reproduction or distribution of this AIA® Document, or any portion of it, may result in severe civil and criminal penalties, and will be prosecuted to the maximum extent possible under the law.** This draft was produced by AIA software at 12:33:47 on 05/14/2009 under Order No.1000392252_1 which expires on 4/23/2010, and is not for resale.
User Notes: BRIDGE A201 Non-Homeownership (6-18-09) (6) (1111997498)

"Delays") whether or not such Delays are foreseeable. The Contractor shall not be entitled to any compensation or recovery of any damages in connection with any Delay, including, without limitation, consequential damages, lost opportunity costs, impact damages, or other similar remuneration. The Owner's exercise of any of its right or remedies under the Contract Documents (including, without limitation, ordering changes in the Work, or directing suspension, rescheduling, or correction of the Work), regardless of the extent or frequency of the Owner's exercise of such rights or remedies, shall not be construed as active interference with the Contractor's performance of the Work.~~This Section 8.3 does not preclude recovery of damages for delay by either party under other provisions of the Contract Documents.~~

ARTICLE 9 PAYMENTS AND COMPLETION

§ 9.1 CONTRACT SUM

The Contract Sum is stated in the Agreement and, including authorized adjustments, is the total amount payable by the Owner to the Contractor for performance of the Work under the Contract Documents.

§ 9.2 SCHEDULE OF VALUES

~~Where the Contract is based on a stipulated sum or Guaranteed Maximum Price, the Contractor shall submit to the Architect, before the first Application for Payment, a~~The schedule of values allocating the entire Contract Sum to the various portions of the Work is attached hereto as Exhibit A.~~and prepared in such form and supported by such data to substantiate its accuracy as the Architect may require.~~ This schedule, unless objected to by the Architect, shall be used as a basis for reviewing the Contractor's Applications for Payment. The schedule of values, and any amendment thereto approved in writing by the Owner pursuant to a Change Order, shall indicate which work will be completed by Subcontractors and which work will be completed by the Contractor's own forces. General Conditions, overhead and profit shall be called out as separate items.

Formatted: Font: Bold

§ 9.3 APPLICATIONS FOR PAYMENT

§ 9.3.1 At least ten days before the date established for each progress payment unless otherwise required by the Contract Documents, the Contractor shall submit to the Architect an itemized Application for Payment prepared in accordance with the schedule of values, if required under Section 9.2., for completed portions of the Work. Such application shall be notarized, if required, and supported by such data substantiating the Contractor's right to payment as the Owner or Architect may require, such as copies of requisitions from Subcontractors and material suppliers, and shall reflect retainage if provided for in the Contract Documents.

§ 9.3.1.1 As provided in Section 7.3.9, such applications may include requests for payment on account of changes in the Work that have been properly authorized by Construction Change Directives, or by interim determinations of the Architect approved by the Owner, but not yet included in Change Orders.

§ 9.3.1.2 Applications for Payment shall not include requests for payment for portions of the Work for which the Contractor does not intend to pay a Subcontractor or material supplier, unless such Work has been performed by others whom the Contractor intends to pay.

§ 9.3.2 Unless otherwise provided in the Contract Documents, payments shall be made on account of materials and equipment delivered and suitably stored at the site for subsequent incorporation in the Work. If approved in advance by the Owner and the Owner's Lender(s), as applicable, payment may similarly be made for materials and equipment suitably stored off the site at a location agreed upon in writing. Payment for materials and equipment stored on or off the site shall be conditioned upon compliance by the Contractor with procedures satisfactory to the Owner to establish the Owner's title to such materials and equipment or otherwise protect the Owner's interest, and shall include the costs of applicable insurance, storage and transportation to the site for such materials and equipment stored off the site.

§ 9.3.3 The Contractor warrants that title to all Work covered by an Application for Payment will pass to the Owner no later than the time of payment. The Contractor further warrants that upon submittal of an Application for Payment all Work for which Certificates for Payment have been previously issued and payments received from the Owner shall, to the best of the Contractor's knowledge, information and belief, be free and clear of liens, claims, security interests or encumbrances in favor of the Contractor, Subcontractors, material suppliers, or other persons or entities making a claim by reason of having provided labor, materials and equipment relating to the Work.

§ 9.3.4 If requested by Owner with each Application for Payment, the Contractor shall furnish the Owner with waivers and releases from all Subcontractors and materialpersons and/or the subcontractors thereof, in such form as

AIA Document A201™ – 2007. Copyright © 1911, 1915, 1918, 1925, 1937, 1951, 1958, 1961, 1963, 1966, 1970, 1976, 1987, 1997 and 2007 by The American Institute of Architects. **All rights reserved. WARNING: This AIA® Document is protected by U.S. Copyright Law and International Treaties. Unauthorized reproduction or distribution of this AIA® Document, or any portion of it, may result in severe civil and criminal penalties, and will be prosecuted to the maximum extent possible under the law.** This draft was produced by AIA software at 12:33:47 on 05/14/2009 under Order No.1000392252_1 which expires on 4/23/2010, and is not for resale.
User Notes: BRIDGE A201 Non-Homeownership (6-18-09) (6) (1111997498)

is form as is acceptable to the Owner. The waiver and release forms to be submitted with each Application for Payment shall include the following:

(a) completed conditional waiver and release forms for all Subcontractors (and their lower tier subcontractor, if any) for whose work in the preceding month payment is sought in the Application for Payment; and

(b) completed unconditional waiver and release forms for all Subcontractors and all of their lower tier subcontractor and materialpersons for whose work and/or materials payment was made by the Owner in response to the Contractor's immediately preceding Application for Payment.

Each waiver and release form shall cover all Work, labor and materials, including, but not limited to equipment and fixtures of all kinds, done, performed or furnished in connection with the portion of the Work included in the Application for Payment to which it pertains, and it shall be completed in all respects and shall be signed only by an authorized representative of the Subcontractor or materialpersons named therein.

§ 9.3.5 Contractor's Obligation to Maintain Lien-Free Title. If any claim of mechanic's lien or stop notice is filed or made against the real property of the Work, the Contractor shall immediately pay and fully discharge the mechanic's lien or stop notice claim, or, in the alternative, may deliver to the Owner a release of lien or stop notice by surety bond in a legally sufficient form and amount to discharge the mechanic's lien or stop notice. The Contractor shall provide whatever documentation, deposits or surety is reasonably required by the title insurance company providing title insurance on the Work in order to obtain lien-free endorsements prior to the Owner's payment of any payment, including any Progress Payment. If the Contractor fails to immediately provide the documentation, deposits, records of payment or surety bonds required by this Section, the Owner may (1) obtain any deposits or surety, or (2) make payments to claimants against the Work, the Contractor, the Owner or the Owner's affiliates in good faith, as reasonably required to release the mechanic's lien or stop notice claim. The Owner may withhold the cost of obtaining such deposits or surety or of making such payments from any payment that would otherwise be due to the Contractor. Failure of the Owner to withhold any or part of any payment pursuant to this Section shall not be a waiver of any right of the Owner under the Contract. Withholding of any payment or part of any payment by the Owner pursuant to this Section shall not be a breach of the Contract.

§ 9.3.6 Withholding of Payments Due to Claims of Subcontractors. If any Subcontractor, material supplier to the Work, or lower tier subcontractor or material supplier files or serves any claim or lien, stop notice, common count or other demand for payment against the Owner, or the real property of the Work, the Owner may either (1) withhold from any Progress Payment or other payment an amount up to one hundred and fifty percent (150%) of the amount necessary to satisfy the claim, stop notice, common count or other demand for payment, including all anticipated costs and fees related to the defense of such claim, including but not limited to attorneys' fees, or (2) release the Progress Payment or other payment. Failure of the Owner to withhold any or part of a Progress Payment pursuant to this Section shall not be a waiver of any right of the Owner under the Contract. Withholding of any payment by the Owner pursuant to this Section shall not be a breach of the Contract.

§ 9.3 7 Defense and Indemnity of Actions Brought by Subcontractors. The Contractor shall defend the Owner (and the Owner's partners or members, as applicable), the Owner's affiliates and employees, and successors in any and all actions brought by Ssubcontractors or material suppliers against the Owner to foreclose a mechanic's lien on the real property of the Work, to enforce any stop notice against the Work or for common counts or any other claim arising out of the Work, except if such actions or claims are caused solely by the Owner's failure to pay the Contractor in breach of its obligation under the terms of this Contract. The Contractor shall indemnify the Owner and its affiliates and employees, and successors with respect to such actions or claims, including, but not limited to, reasonable attorneys' fees, and for amounts paid by the Owner in good faith settlement of mechanic's lien foreclosure, stop notice and common counts actions against the real property of the Work.

Formatted: Default Paragraph Font, Font: Arial Narrow, Bold

§ 9.4 CERTIFICATES FOR PAYMENT

§ 9.4.1 The Architect will, within seven days after receipt of the Contractor's ~~Application~~draft Certificate for Payment, (which shall be delivered by the Contractor to the Architect and the Owner concurrently with the submission of the Application for Payment) either, ~~issue to the Owner a Certificate for Payment, with a copy to the Contractor, for such amount as the Architect determines is properly due~~subject to the Owner's review, approve the Contractor's draft Certificate of Payment, or notify the Contractor and Owner in writing of the Architect's reasons for withholding ~~certification~~ approval of the draft Certificate for Payment in whole or in part as provided in Section 9.5.1.

AIA Document A201™ – 2007. Copyright © 1911, 1915, 1918, 1925, 1937, 1951, 1958, 1961, 1963, 1966, 1970, 1976, 1987, 1997 and 2007 by The American Institute of Architects. **All rights reserved. WARNING: This AIA® Document is protected by U.S. Copyright Law and International Treaties. Unauthorized reproduction or distribution of this AIA® Document, or any portion of it, may result in severe civil and criminal penalties, and will be prosecuted to the maximum extent possible under the law.** This draft was produced by AIA software at 12:33:47 on 05/14/2009 under Order No.1000392252_1 which expires on 4/23/2010, and is not for resale.
User Notes: BRIDGE A201 Non-Homeownership (6-18-09) (6) (1111997498)

§ 9.4.2 The ~~issuance~~ approval of a Certificate for Payment will constitute a representation by the Architect to the Owner, based on the Architect's evaluation of the Work and the data comprising the Application for Payment, that, to the best of the Architect's knowledge, information and belief, the Work has progressed to the point indicated and that the quality of the Work is in accordance with the Contract Documents. The foregoing representations are subject to an evaluation of the Work for conformance with the Contract Documents upon Substantial Completion, to results of subsequent tests and inspections, to correction of minor deviations from the Contract Documents prior to completion and to specific qualifications expressed by the Architect. The ~~issuance~~ approval of a Certificate for Payment will further constitute a representation that the Contractor is entitled to payment in the amount certified. However, the ~~issuance~~ approval of a Certificate for Payment will not be a representation that the Architect has (1) made exhaustive or continuous on-site inspections to check the quality or quantity of the Work, (2) reviewed construction means, methods, techniques, sequences or procedures, (3) reviewed copies of requisitions received from Subcontractors and material suppliers and other data requested by the Owner to substantiate the Contractor's right to payment, or (4) made examination to ascertain how or for what purpose the Contractor has used money previously paid on account of the Contract Sum.

§ 9.5 DECISIONS TO WITHHOLD CERTIFICATION

§ 9.5.1 The Architect may withhold approval of a Certificate for Payment in whole or in part, to the extent reasonably necessary to protect the Owner, if in the Architect's opinion the representations to the Owner required by Section 9.4.2 cannot be made. If the Architect is unable to certify payment in the amount of the Application, the Architect will notify the Contractor and Owner as provided in Section 9.4.1. If the Contractor and Architect cannot agree on a revised amount, the Architect, ~~will promptly issue~~with the consent of the Owner, will promptly approve a Certificate for Payment for the amount for which the Architect is able to make such representations to the Owner. The Architect may also withhold approval of a Certificate for Payment or, because of subsequently discovered evidence, may nullify the whole or a part of a Certificate for Payment previously issued, to such extent as may be necessary in the Architect's opinion to protect the Owner from loss for which the Contractor is responsible, including loss resulting from acts and omissions described in Section 3.3.2, because of

- **.1** defective Work not remedied;
- **.2** third party claims filed or reasonable evidence indicating probable filing of such claims unless security acceptable to the Owner is provided by the Contractor;
- **.3** failure of the Contractor to make payments properly to Subcontractors or for labor, materials or equipment;
- **.4** reasonable evidence that the Work cannot be completed for the unpaid balance of the Contract Sum;
- **.5** damage to the Owner or a separate contractor;
- **.6** reasonable evidence that the Work will not be completed within the Contract Time, and that the unpaid balance would not be adequate to cover actual or liquidated damages for the anticipated delay; or
- **.7** ~~repeated~~ failure to carry out the Work in accordance with the Contract Documents.

§ 9.5.2 When the above reasons for withholding certification are removed, certification will be made for amounts previously withheld.

§ 9.5.3 If the Architect withholds certification for payment under Section 9.5.1.3, the Owner may, at its sole option, issue joint checks to the Contractor and to any Subcontractor or material or equipment suppliers to whom the Contractor failed to make payment for Work properly performed or material or equipment suitably delivered. If the Owner makes payments by joint check, the Owner shall notify the Architect and the Architect will reflect such payment on the next Certificate for Payment.

§ 9.5.4 The Owner shall not be deemed to be in breach of this Contract by reason of the withholding of any payment from the Contractor in whole or in part when (1) the Architect has withheld a Certificate of Payment in order to protect the Owner from loss because of the items listed in Subparagraph 9.5.1, or (2) the Owner has determined in good faith that such payment must be withheld to protect the Owner from loss because of the items listed in Subparagraph 9.5.1.

§ 9.5.5 If the Contractor disputes any determination by the Architect with respect to any Certificate for Payment, the Contractor shall nevertheless expeditiously continue to prosecute the Work. If the Owner withholds payment in good faith due to a dispute between the Owner and the Contractor, and such withholdings of payment is not authorized by the Contract Documents, the Contractor shall continue to expeditiously prosecute the Work, provided

AIA Document A201™ – 2007. Copyright © 1911, 1915, 1918, 1925, 1937, 1951, 1958, 1961, 1963, 1966, 1970, 1976, 1987, 1997 and 2007 by The American Institute of Architects. **All rights reserved. WARNING: This AIA® Document is protected by U.S. Copyright Law and International Treaties. Unauthorized reproduction or distribution of this AIA® Document, or any portion of it, may result in severe civil and criminal penalties, and will be prosecuted to the maximum extent possible under the law.** This draft was produced by AIA software at 12:33:47 on 05/14/2009 under Order No.1000392252_1 which expires on 4/23/2010, and is not for resale.
User Notes: BRIDGE A201 Non-Homeownership (6-18-09) (6) (1111997498)

the disputed funds are either withheld by the Lenders or are deposited in escrow until the dispute is resolved.

§ 9.6 PROGRESS PAYMENTS

§ 9.6.1 After the Architect has ~~issued~~ approved a Certificate for Payment, the Owner shall make payment in the manner and within the time provided in the Contract Documents, and shall so notify the Architect.

§ 9.6.2 The Contractor shall pay each Subcontractor no later than seven days after receipt of payment from the Owner the amount to which the Subcontractor is entitled, reflecting percentages actually retained from payments to the Contractor on account of the Subcontractor's portion of the Work. The Contractor shall, by appropriate agreement with each Subcontractor, require each Subcontractor to make payments to Sub-subcontractors in a similar manner. Notwithstanding anything in this Section 9.6.2 to the contrary, the Owner may elect, in the Owner's sole discretion, to make any payment requested by the Contractor on behalf of a Subcontractor jointly payable to the Contractor and such Subcontractor. The Contractor and the Subcontractor shall be responsible for the allocation and disbursement of funds included as part of any such joint payment. In no event shall any joint payment be construed to create any (i) contract between the Owner and the subcontractor, (ii) obligations from the Owner to such subcontractor, or (iii) rights in such subcontractor against the Owner.

§ 9.6.3 ~~The Architect will, on request, furnish to a Subcontractor, if practicable, information regarding percentages of completion or amounts applied for by the Contractor and action taken thereon by the Architect and Owner on account of portions of the Work done by such Subcontractor.~~INTENTIONALLY OMITTED

§ 9.6.4 The Owner has the right to request written evidence from the Contractor that the Contractor has properly paid Subcontractors and material and equipment suppliers amounts paid by the Owner to the Contractor for subcontracted Work. If the Contractor fails to furnish such evidence within seven days, the Owner shall have the right to contact Subcontractors to ascertain whether they have been properly paid. Neither the Owner nor Architect shall have an obligation to pay or to see to the payment of money to a Subcontractor, except as may otherwise be required by law.

§ 9.6.5 Contractor payments to material and equipment suppliers shall be treated in a manner similar to that provided in Sections 9.6.2, ~~9.6.3~~ and 9.6.4.

§ 9.6.6 A Certificate for Payment, a progress payment, or partial or entire use or occupancy of the Project by the Owner shall not constitute acceptance of Work not in accordance with the Contract Documents.

§ 9.6.7 Unless the Contractor provides the Owner with a payment bond in the full penal sum of the Contract Sum, payments received by the Contractor for Work properly performed by Subcontractors and suppliers shall be held by the Contractor for those Subcontractors or suppliers who performed Work or furnished materials, or both, under contract with the Contractor for which payment was made by the Owner. Nothing contained herein shall require money to be placed in a separate account and not commingled with money of the Contractor, shall create any fiduciary liability or tort liability on the part of the Contractor for breach of trust or shall entitle any person or entity to an award of punitive damages against the Contractor for breach of the requirements of this provision.

§ 9.7 FAILURE OF PAYMENT

§9.7.1 If the Architect does not ~~issue~~ approve a Certificate for Payment, through no fault of the Contractor, within seven days after receipt of the Contractor's Application for Payment, or if the Owner does not pay the Contractor within seven days after the date established in the Contract Documents the amount certified by the Architect or awarded by binding dispute resolution, then the Contractor may, upon seven additional days' written notice to the Owner and Architect, stop the Work until payment of the amount owing has been received. The Contract Time shall be extended appropriately and the Contract Sum shall be increased by the amount of the Contractor's reasonable costs of shut-down, delay and start-up, plus interest as provided for in the Contract Documents.

Formatted: Font: Arial Narrow, Bold

§ 9.7.2 If the Owner is entitled to reimbursement or payment from the Contractor under or pursuant to the Contract Documents, such payment shall be made promptly upon demand by the Owner. Notwithstanding anything contained in the Contract Documents to the contrary, if the Contractor fails to promptly make any payment due the Owner, or if the Owner incurs reasonable costs and expenses related to cure of any default of the Contractor or to correct defective Work, the Owner shall have an absolute right to offset such amount against the Contract Sums and may, at the Owner's sole discretion, elect either to (1) deduct an amount equal to the amount to which the Owner is entitled from any payment thereafter due the Contractor from the Owner, or (2) issue a written notice to the Contractor reducing the Contract Sum by an amount equal to that which the Owner is entitled.

AIA Document A201™ – 2007. Copyright © 1911, 1915, 1918, 1925, 1937, 1951, 1958, 1961, 1963, 1966, 1970, 1976, 1987, 1997 and 2007 by The American Institute of Architects. **All rights reserved. WARNING: This AIA® Document is protected by U.S. Copyright Law and International Treaties. Unauthorized reproduction or distribution of this AIA® Document, or any portion of it, may result in severe civil and criminal penalties, and will be prosecuted to the maximum extent possible under the law.** This draft was produced by AIA software at 12:33:47 on 05/14/2009 under Order No.1000392252_1 which expires on 4/23/2010, and is not for resale.
User Notes: BRIDGE A201 Non-Homeownership (6-18-09) (6) (1111997498)

§ 9.8 SUBSTANTIAL COMPLETION

§ 9.8.1 Substantial Completion is the stage in the progress of the Work when the Work or designated portion thereof is sufficiently complete in accordance with the Contract Documents so that the Owner can occupy or utilize the Work for its intended use; provided, however, that as a condition precedent to Substantial Completion, the Owner has received a certificate of occupancy and any other permits, approvals, licenses and other documents from any governmental authority having jurisdiction thereof necessary for the beneficial occupancy of the Project, which are the responsibility of the Contractor. The Contractor shall perform the Work such that the Owner may obtain a final certificate of occupancy within the time required by any temporary certificate of occupancy.

§ 9.8.2 When the Contractor considers that the Work, or a portion thereof which the Owner agrees to accept separately, is substantially complete, the Contractor shall notify the Architect and the Owner of such determination. Promptly thereafter, the Owner or the Architect shall prepare ~~and submit to the Architect~~ a comprehensive list of items to be completed or corrected by the Contractor prior to final payment (the "Punchlist"). Failure to include an item on such list does not alter the responsibility of the Contractor to complete all Work in accordance with the Contract Documents.

§ 9.8.3 No later than ten (10) days following the Contractor's receipt of the Punchlist, the Contractor shall complete and/or correct the items designated therein, and submit a request to the Owner for an additional inspection to determine substantial completion. No later than ten (10) days following the Owner's receipt of the Contractor's request, the Owner or ~~Upon receipt of the Contractor's list,~~ the Architect will make an inspection to determine whether the Work or designated portion thereof is substantially complete. If the Architect's or the Owner's inspection discloses any item, whether or not included on the ~~Contractor's~~ Punchlist, which is not sufficiently complete in accordance with the Contract Documents so that the Owner can occupy or utilize the Work or designated portion thereof for its intended use, the Contractor shall, before issuance of the Certificate of Substantial Completion, complete or correct such item upon notification by the Architect and the Owner. In such case, the Contractor shall then submit a request for another inspection by the Architect to determine Substantial Completion. In the event that such items are not reasonably completed or corrected by this inspection and additional visits by the Owner and Architect are required thereafter, then the Contractor shall pay for the costs of the hourly service charge of the Architect.

§ 9.8.4 When the Work or designated portion thereof is substantially complete, the Architect will prepare a Certificate of Substantial Completion that when signed by the Owner shall establish the date of Substantial Completion, shall establish responsibilities of the Owner and Contractor for security, maintenance, heat, utilities, damage to the Work and insurance, and shall fix the time within which the Contractor shall finish all items on the list accompanying the Certificate. Warranties required by the Contract Documents shall commence on the date of Substantial Completion of the Work or designated portion thereof unless otherwise provided in the Certificate of Substantial Completion.

§ 9.8.5 The Certificate of Substantial Completion shall be submitted to the Owner and Contractor for their written acceptance of responsibilities assigned to them in such Certificate. Upon such acceptance and consent of surety, if any, the Owner shall make payment of retainage applying to such Work or designated portion thereof. Such payment shall be adjusted for Work that is incomplete or not in accordance with the requirements of the Contract Documents.

§ 9.8.6 If the Certificate of Substantial Completion is conditioned upon, or contains any list of, unfinished items which must be completed or corrected whether or note such items appeared on the initial Punchlist, or if anytime prior to Final Payment, Owner discovers additional items which must be completed or corrected, the Owner may withhold from any payment otherwise due under this Contract, including any remaining Progress Payment, Final Payment or any retained percentage, an additional amount not more than 150% of the cost of completing those items.

If a percentage of payment is withheld, the estimated completion costs shall be determined by the Owner in good faith. If the Owner withholds any payment or percentage of payment pursuant to this Section, such payment or percentage of payment shall not be released to the Contractor until each item has been corrected and inspected by the Owner. Withholding of any amount by the Owner pursuant to this Section shall not be a breach of this Contract. Failure of the Owner to withhold any amount pursuant to this Section shall not prejudice any legal rights of the Owner or constitute a waiver of any kind.

AIA Document A201™ – 2007. Copyright © 1911, 1915, 1918, 1925, 1937, 1951, 1958, 1961, 1963, 1966, 1970, 1976, 1987, 1997 and 2007 by The American Institute of Architects. **All rights reserved. WARNING: This AIA® Document is protected by U.S. Copyright Law and International Treaties. Unauthorized reproduction or distribution of this AIA® Document, or any portion of it, may result in severe civil and criminal penalties, and will be prosecuted to the maximum extent possible under the law.** This draft was produced by AIA software at 12:33:47 on 05/14/2009 under Order No.1000392252_1 which expires on 4/23/2010, and is not for resale.
User Notes: BRIDGE A201 Non-Homeownership (6-18-09) (6) (1111997498)

§ 9.9 PARTIAL OCCUPANCY OR USE

§ 9.9.1 The Owner may occupy or use any completed or partially completed portion of the Work at any stage when such portion is designated by separate agreement with the Contractor, provided such occupancy or use is consented to by the insurer as required under Section 11.3.1.5 and authorized by public authorities having jurisdiction over the Project. Such partial occupancy or use may commence whether or not the portion is substantially complete, provided the Owner and Contractor have accepted in writing the responsibilities assigned to each of them for payments, retainage, if any, security, maintenance, heat, utilities, damage to the Work and insurance, and have agreed in writing concerning the period for correction of the Work and commencement of warranties required by the Contract Documents. When the Contractor considers a portion substantially complete, the Contractor shall prepare and submit a list to the Architect as provided under Section 9.8.2. Consent of the Contractor to partial occupancy or use shall not be unreasonably withheld. The stage of the progress of the Work shall be determined by written agreement between the Owner and Contractor or, if no agreement is reached, by decision of the Architect.

§ 9.9.2 Immediately prior to such partial occupancy or use, the Owner, Contractor and Architect shall jointly inspect the area to be occupied or portion of the Work to be used in order to determine and record the condition of the Work.

§ 9.9.3 Unless otherwise agreed upon, partial occupancy or use of a portion or portions of the Work shall not constitute acceptance of Work not complying with the requirements of the Contract Documents.

§ 9.10 FINAL COMPLETION AND FINAL PAYMENT

§ 9.10.1 Upon receipt of the Contractor's written notice that the Work is ready for final inspection and acceptance and upon receipt of a final Application for Payment, the Architect and the Owner will promptly make such inspection and, when the Architect and the Owner finds the Work acceptable under the Contract Documents and the Contract fully performed, including, but not limited to any work set forth on the Punchlist, the Architect, with the consent of the Owner, will promptly ~~issue~~ approve a final Certificate for Payment stating that to the best of the Architect's knowledge, information and belief, and on the basis of the Architect's on-site visits and inspections, the Work has been completed in accordance with terms and conditions of the Contract Documents and that the entire balance found to be due the Contractor and noted in the final Certificate is due and payable. The Architect's final Certificate for Payment will constitute a further representation that conditions listed in Section 9.10.2 as precedent to the Contractor's being entitled to final payment have been fulfilled.

§ 9.10.2 In accordance with Section 12.2 of the Contract, neither final payment nor any remaining retained percentage shall become due until the Owner has accepted the Work and, if the Owner files a Notice of Completion, thirty-five (35) days have elapsed from such filing, or if the Owner does not file a Notice of Completion, forty-five (45) days have elapsed from completion of the Work. If the Owner files a Notice of Completion such notice shall be filed in the office of the appropriate County Recorder, and shall be filed within the time frame provided for in California Civil Code Section 3093. The Owner shall accept the Work only after the following have occurred:

.1 The Contractor has submitted to the Architect and the Owner: (1) an affidavit that payrolls, bills for materials and equipment, and other indebtedness connected with the Work for which the Owner or the Owner's property might be responsible or encumbered (less amounts withheld by Owner) have been paid or otherwise satisfied; (2) a certificate evidencing that insurance required by the Contract Documents to remain in force after final payment is currently in effect and will not be canceled or allowed to expire until at least 30 days' prior written notice has been given to the Owner; (3) a written statement that the Contractor knows of no substantial reason that the insurance will not be renewable to cover the period required by the Contract Documents; (4) consent of surety, if any, to final payment; (5) three complete sets of "as built" drawings and other documents set forth in Section 3.11; (6) copies of complete installation, operation and maintenance manuals, including all manufacturers' literature, of equipment and materials used in the Project; (7) assignments of warranties of the Contractor and all Subcontractors and materialpersons; (8) the names, addresses and telephone numbers of all Subcontractors, and principal vendors on the Project; (9) all inspection reports, permits and if applicable, temporary and final certificates of occupancy and licenses necessary for the occupancy of the Project; and (10) a final statement of the cost of the Work allocated in accordance with the Schedule of Values, audited or certified by a certified public accountant, and in a form which has been approved by the Owner for the Work.

AIA Document A201™ – 2007. Copyright © 1911, 1915, 1918, 1925, 1937, 1951, 1958, 1961, 1963, 1966, 1970, 1976, 1987, 1997 and 2007 by The American Institute of Architects. **All rights reserved. WARNING: This AIA® Document is protected by U.S. Copyright Law and International Treaties. Unauthorized reproduction or distribution of this AIA® Document, or any portion of it, may result in severe civil and criminal penalties, and will be prosecuted to the maximum extent possible under the law.** This draft was produced by AIA software at 12:33:47 on 05/14/2009 under Order No.1000392252_1 which expires on 4/23/2010, and is not for resale.
User Notes: BRIDGE A201 Non-Homeownership (6-18-09) (6) (1111997498)

.2 All persons, firms and corporations, including all laborers, material persons, suppliers and Subcontractors who have furnished equipment, supplied materials or performed work for or in connection with the Work, including but not limited to those persons who could file a claim of lien, have been paid or will be paid in full out of the remaining retained percentage; and those persons, firms and corporations have submitted their final statements with a final release and waiver of all rights to mechanic's lien, stop notice or recourse against surety on the bond, (which may be subject to final payment if those persons have not been paid in full). The Contractor shall make these waivers available to the Owner for inspection by the Owner. In the event a dispute has arisen between the Contractor and one of the parties listed above in this Section which prevents the Contractor from obtaining the waiver of rights required by this Section from that party, the Contractor may satisfy the requirements of this Section by (a) supplying a payment bond issued by a surety licensed to do business in the State of California and acceptable to the Owner to remove the effect of any lien, stop notice, or related claim against the Work or the real property upon which the Work is built, and (b) agreeing to defend and indemnify the Owner against any actions filed by such person who has supplied materials to or performed work for or in connection with the Work. The Contractor shall also have submitted an affidavit to the Owner that all waivers described in this Article have been obtained from all parties described in this Article or that the claims of such parties have been satisfied by the obtaining of a bond.

.3 All labor has been performed and materials supplied and incorporated into the Work in a good workperson like manner consistent with the Contract Documents.

.4 The Work, premises and surrounding area have been cleaned up consistent with the Contract Documents.

.5 All portions of the Work requiring inspection any governmental authority have been inspected and approved by such authority and all requisite certificates of occupancy, approvals, licenses and permits have been issued.

.6 The Contractor has submitted a conditional lien waiver followed promptly by an unconditional lien waiver upon the Contractor's receipt of payment, and the Owner has assurances from the title company that the Site and the Work are free from all liens related to the Work.

.7 The Lenders to the Work have authorized release of the Final Payment, if applicable.~~Neither final payment nor any remaining retained percentage shall become due until the Contractor submits to the Architect (1) an affidavit that payrolls, bills for materials and equipment, and other indebtedness connected with the Work for which the Owner or the Owner's property might be responsible or encumbered (less amounts withheld by Owner) have been paid or otherwise satisfied, (2) a certificate evidencing that insurance required by the Contract Documents to remain in force after final payment is currently in effect and will not be canceled or allowed to expire until at least 30 days' prior written notice has been given to the Owner, (3) a written statement that the Contractor knows of no substantial reason that the insurance will not be renewable to cover the period required by the Contract Documents, (4) consent of surety, if any, to final payment and (5), if required by the Owner, other data establishing payment or satisfaction of obligations, such as receipts, releases and waivers of liens, claims, security interests or encumbrances arising out of the Contract, to the extent and in such form as may be designated by the Owner. If a Subcontractor refuses to furnish a release or waiver required by the Owner, the Contractor may furnish a bond satisfactory to the Owner to indemnify the Owner against such lien. If such lien remains unsatisfied after payments are made, the Contractor shall refund to the Owner all money that the Owner may be compelled to pay in discharging such lien, including all costs and reasonable attorneys' fees.~~

Formatted: Indent: Left: 0.5", Hanging: 0.5"

§ 9.10.3 If, after Substantial Completion of the Work, final completion thereof is materially delayed through no fault of the Contractor or by issuance of Change Orders affecting final completion, and the Architect so confirms, the Owner shall, upon application by the Contractor and certification by the Architect, and without terminating the Contract, make payment of the balance due for that portion of the Work fully completed and accepted. If the remaining balance for Work not fully completed or corrected is less than retainage stipulated in the Contract Documents, and if bonds have been furnished, the written consent of surety and the Owner's Lenders. as applicable

AIA Document A201™ – 2007. Copyright © 1911, 1915, 1918, 1925, 1937, 1951, 1958, 1961, 1963, 1966, 1970, 1976, 1987, 1997 and 2007 by The American Institute of Architects. **All rights reserved. WARNING: This AIA® Document is protected by U.S. Copyright Law and International Treaties. Unauthorized reproduction or distribution of this AIA® Document, or any portion of it, may result in severe civil and criminal penalties, and will be prosecuted to the maximum extent possible under the law.** This draft was produced by AIA software at 12:33:47 on 05/14/2009 under Order No.1000392252_1 which expires on 4/23/2010, and is not for resale.
User Notes: BRIDGE A201 Non-Homeownership (6-18-09) (6) (1111997498)

to payment of the balance due for that portion of the Work fully completed and accepted shall be submitted by the Contractor to the Architect prior to certification of such payment. Such payment shall be made under terms and conditions governing final payment, except that it shall not constitute a waiver of claims.

§ 9.10.4 The making of final payment shall not constitute a waiver of any ~~Claims~~ claims by the Owner. ~~except those arising from~~

~~.1 liens, Claims, security interests or encumbrances arising out of the Contract and unsettled;~~
~~.2 failure of the Work to comply with the requirements of the Contract Documents; or~~
~~.3 terms of special warranties required by the Contract Documents.~~

§ 9.10.5 Acceptance of final payment by the Contractor, a Subcontractor or material supplier shall constitute a waiver of claims by that payee except those previously made in writing and identified by that payee as unsettled at the time of final Application for Payment.

ARTICLE 10 PROTECTION OF PERSONS AND PROPERTY

§ 10.1 SAFETY PRECAUTIONS AND PROGRAMS

The Contractor shall be solely responsible for initiating, maintaining and supervising all safety precautions and programs in connection with the performance of the Contract, and the performance of the Contract and for providing safe conditions for the performance of the Work. The Owner shall have no liability or responsibility for the physical condition or safety of the site or any improvements located on the site until acceptance of the Work by the Owner.

§ 10.2 SAFETY OF PERSONS AND PROPERTY

§ 10.2.1 The Contractor shall take reasonable precautions for safety of, and shall provide reasonable protection to prevent damage, injury or loss to

.1 employees on the Work and other persons who may be affected thereby;

.2 the Work and materials and equipment to be incorporated therein, whether in storage on or off the site, under care, custody or control of the Contractor or the Contractor's Subcontractors or Sub-subcontractors; and

.3 other property at the site or adjacent thereto, such as trees, shrubs, lawns, walks, pavements, roadways, structures and utilities not designated for removal, relocation or replacement in the course of construction.

§ 10.2.2 The Contractor shall comply with and give notices required by ~~applicable~~ the Applicable ~~laws, statutes, ordinances, codes, rules and regulations, and lawful orders of public authorities~~Requirements bearing on safety of persons or property or their protection from damage, injury or loss.

§ 10.2.3 The Contractor shall erect and maintain, as required by existing conditions and performance of the Contract, reasonable safeguards for safety and protection, including posting danger signs and other warnings against hazards, promulgating safety regulations and notifying owners and users of adjacent sites and utilities. The Contractor shall also be responsible for, at the Contractor's sole cost and expense, all measures necessary to protect any property adjacent to the Project and improvements thereon. Any damage to such property or improvements shall be promptly repaired by the Contractor.

§ 10.2.4 When use or storage of explosives or other hazardous materials or equipment or unusual methods are necessary for execution of the Work, the Contractor shall exercise utmost care and carry on such activities under supervision of properly qualified personnel. The Contractor shall also give the Owner and the Architect reasonable advance notice.

§ 10.2.5 The Contractor shall promptly remedy damage and loss (other than damage or loss insured under property insurance required by the Contract Documents) to property referred to in Sections 10.2.1.2 and 10.2.1.3 caused in whole or in part by the Contractor, a Subcontractor, a Sub-subcontractor, or anyone directly or indirectly employed by any of them, or by anyone for whose acts they may be liable and for which the Contractor is responsible under Sections 10.2.1.2 and 10.2.1.3, except damage or loss attributable to acts or omissions of the Owner or Architect or anyone directly or indirectly employed by either of them, or by anyone for whose acts either of them may be liable, and not attributable to the fault or negligence of the Contractor. The foregoing obligations of the Contractor are in addition to the Contractor's obligations under Section 3.18.

DRAFT

AIA Document A201™ – 2007. Copyright © 1911, 1915, 1918, 1925, 1937, 1951, 1958, 1961, 1963, 1966, 1970, 1976, 1987, 1997 and 2007 by The American Institute of Architects. **All rights reserved. WARNING: This AIA® Document is protected by U.S. Copyright Law and International Treaties. Unauthorized reproduction or distribution of this AIA® Document, or any portion of it, may result in severe civil and criminal penalties, and will be prosecuted to the maximum extent possible under the law.** This draft was produced by AIA software at 12:33:47 on 05/14/2009 under Order No.1000392252_1 which expires on 4/23/2010, and is not for resale.
User Notes: BRIDGE A201 Non-Homeownership (6-18-09) (6) (1111997498)

§ 10.2.6 The Contractor shall designate a responsible member of the Contractor's organization at the site whose duty shall be the prevention of accidents. This person shall be the Contractor's superintendent unless otherwise designated by the Contractor in writing to the Owner and Architect.

§ 10.2.7 The Contractor shall not permit any part of the construction or site to be loaded so as to cause damage or create an unsafe condition. When all or a portion of the Work is suspended for any reason, the Contractor shall securely fasten down all coverings and protect the Work, as necessary, from injury by any cause.

§ 10.2.8 INJURY OR DAMAGE TO PERSON OR PROPERTY

If either party suffers injury or damage to person or property because of an act or omission of the other party, or of others for whose acts such party is legally responsible, written notice of such injury or damage, whether or not insured, shall be given to the other party within a reasonable time not exceeding 21 days after discovery. The notice shall provide sufficient detail to enable the other party to investigate the matter, including, but not limited to statements of witness. In addition, if death, serious personal injuries, or serious damages occur then the accident shall be reported immediately by telephone or messenger to the Owner and the Architect.

§ 10.3 HAZARDOUS MATERIALS

§ 10.3.1 The Contractor is responsible for compliance with any requirements included in the Contract Documents regarding hazardous materials. If the Contractor encounters a hazardous material or substance (as defined in the Federal Comprehensive Environmental Response, Compensation and Liability Act of 1980, as amended), including but not limited to asbestos or polychlorinated biphenyl (PCB), not addressed in the Contract Documents and if reasonable precautions will be inadequate to prevent foreseeable bodily injury or death to persons resulting from such a material or substance, ~~including but not limited to asbestos or polychlorinated biphenyl (PCB),~~ encountered on the site by the Contractor, then the Contractor shall, upon recognizing the condition, immediately stop Work in the affected area and report the condition to the Owner and Architect in writing. The Contractor shall continue all other Work that is not affected by such condition.

§ 10.3.2 Upon receipt of the Contractor's written notice, the Owner shall obtain the services of a licensed laboratory to verify the presence or absence of the material or substance reported by the Contractor and, in the event such material or substance is found to be present, to cause it to be rendered harmless. Unless otherwise required by the Contract Documents, the Owner shall furnish in writing to the Contractor and Architect the names and qualifications of persons or entities who are to perform tests verifying the presence or absence of such material or substance or who are to perform the task of removal or safe containment of such material or substance. The Contractor and the Architect will promptly reply to the Owner in writing stating whether or not either has reasonable objection to the persons or entities proposed by the Owner. If either the Contractor or Architect has an objection to a person or entity proposed by the Owner, the Owner shall propose another to whom the Contractor and the Architect have no reasonable objection. When the material or substance has been rendered harmless, Work in the affected area shall resume upon written agreement of the Owner and Contractor. By Change Order, the Contract Time shall be extended appropriately and the Contract Sum shall be increased in the amount of the Contractor's reasonable additional costs of shut-down, delay and start-up. The term "rendered harmless" shall be interpreted to mean that levels of asbestos and polychlorinated biphenyls are less than any applicable exposure standards set forth in Occupational Safety and Health Administration regulations or that any excess of such standards has been e~~i~~ncapsulated or other such action has been taken such that the levels are no longer harmful. In no event, however, shall the Owner have any responsibility for any substance or material that is brought to the Project site by the Contractor, any Subcontractor, any material supplier, or any entity for whom any of them is responsible. The Contractor agrees not to import any fill that are hazardous, toxic or made up of any items that are hazardous or toxic.

§ 10.3.3 Intentionally Deleted.

~~To the fullest extent permitted by law, the Owner shall indemnify and hold harmless the Contractor, Subcontractors, Architect, Architect's consultants and agents and employees of any of them from and against claims, damages, losses and expenses, including but not limited to attorneys' fees, arising out of or resulting from performance of the Work in the affected area if in fact the material or substance presents the risk of bodily injury or death as described in Section 10.3.1 and has not been rendered harmless, provided that such claim, damage, loss or expense is attributable to bodily injury, sickness, disease or death, or to injury to or destruction of tangible property (other than the Work itself), except to the extent that such damage, loss or expense is due to the fault or negligence of the party seeking indemnity.~~

AIA Document A201™ – 2007. Copyright © 1911, 1915, 1918, 1925, 1937, 1951, 1958, 1961, 1963, 1966, 1970, 1976, 1987, 1997 and 2007 by The American Institute of Architects. **All rights reserved. WARNING: This AIA® Document is protected by U.S. Copyright Law and International Treaties. Unauthorized reproduction or distribution of this AIA® Document, or any portion of it, may result in severe civil and criminal penalties, and will be prosecuted to the maximum extent possible under the law.** This draft was produced by AIA software at 12:33:47 on 05/14/2009 under Order No.1000392252_1 which expires on 4/23/2010, and is not for resale.
User Notes: BRIDGE A201 Non-Homeownership (6-18-09) (6) (1111997498)

10.3.4~~§ 10.3.~~4 The Owner shall not be responsible under this Section 10.3 for materials or substances the Contractor brings to the site unless such materials or substances are required by the Contract Documents. Contractor shall not permit any hazardous material or substance to be brought to or used on the Project site except to the extent such hazardous material or substance is necessary to and customarily used in the construction or residential projects like the Project. Any hazardous material or substance brought or used on the Project site by the Contractor, any Subcontractor, any material supplier, or any entity for whom any of them is responsible, shall be used, stored and disposed of in compliance with all applicable laws related to such hazardous materials or substances. Any damage to the property referred to in Sections 10.2.1.2 and 10.2.1.3 resulting from the improper storage or use of hazardous materials or substances shall be remedied by the Contractor at its sole cost and expense in accordance with applicable laws. The Contractor shall provide the Owner notice of any release of hazardous materials or substance at the Project site. In no event, however, shall the Owner have any responsibility for any substance or material that is brought to the Project site by the Contractor, any Subcontractor, any material supplier, or any entity for whom any of them is responsible. The Contractor agrees not to import any fill that are hazardous, toxic or made up of any items that are hazardous or toxic. ~~The Owner shall be responsible for materials or substances required by the Contract Documents, except to the extent of the Contractor's fault or negligence in the use and handling of such materials or substances.~~

§ 10.3.5~~5 4~~ The Contractor shall indemnify the Owner for the cost and expense the Owner incurs (1) for remediation of a material or substance the Contractor brings to the site and negligently handles, or (2) where the Contractor fails to perform its obligations under Section 10.3.1, except to the extent that the cost and expense are due to the Owner's fault or negligence.

§ 10.3.6~~6 5~~ If, without negligence or willful misconduct on the part of the Contractor, the Contractor is held liable by a government agency for the cost of remediation of a hazardous material or substance solely by reason of performing Work as required by the Contract Documents, the Owner shall indemnify the Contractor for all cost and expense thereby incurred.

§ 10.4 EMERGENCIES

In an emergency affecting safety of persons or property, the Contractor shall act, at the Contractor's discretion, to prevent threatened damage, injury or loss. Additional compensation or extension of time claimed by the Contractor on account of an emergency shall be determined as provided in Article 15 and Article 7.

ARTICLE 11 INSURANCE AND BONDS

§ 11.1 CONTRACTOR'S LIABILITY INSURANCE

§ 11.1.1 The Contractor shall maintain insurance of the types and in the amounts set forth in the Owner's Insurance Requirements Exhibit and in the Lender & Investor Requirements Exhibit attached to the Contract and incorporated herein. To the extent there is a conflict between the Owner's Insurance requirements and the insurance requirements set forth in the Lender & Investor Requirements Exhibit, the Contractor shall comply with the most extensive requirements.

~~purchase from and maintain in a company or companies lawfully authorized to do business in the jurisdiction in which the Project is located such insurance as will protect the Contractor from claims set forth below which may arise out of or result from the Contractor's operations and completed operations under the Contract and for which the Contractor may be legally liable, whether such operations be by the Contractor or by a Subcontractor or by anyone directly or indirectly employed by any of them, or by anyone for whose acts any of them may be liable:~~

- ~~.1 Claims under workers' compensation, disability benefit and other similar employee benefit acts that are applicable to the Work to be performed;~~
- ~~.2 Claims for damages because of bodily injury, occupational sickness or disease, or death of the Contractor's employees;~~
- ~~.3 Claims for damages because of bodily injury, sickness or disease, or death of any person other than the Contractor's employees;~~
- ~~.4 Claims for damages insured by usual personal injury liability coverage;~~
- ~~.5 Claims for damages, other than to the Work itself, because of injury to or destruction of tangible property, including loss of use resulting therefrom;~~
- ~~.6 Claims for damages because of bodily injury, death of a person or property damage arising out of ownership, maintenance or use of a motor vehicle;~~
- ~~.7 Claims for bodily injury or property damage arising out of completed operations; and~~
- ~~.8 Claims involving contractual liability insurance applicable to the Contractor's obligations under Section 3.18.~~

AIA Document A201™ – 2007. Copyright © 1911, 1915, 1918, 1925, 1937, 1951, 1958, 1961, 1963, 1966, 1970, 1976, 1987, 1997 and 2007 by The American Institute of Architects. **All rights reserved. WARNING: This AIA® Document is protected by U.S. Copyright Law and International Treaties. Unauthorized reproduction or distribution of this AIA® Document, or any portion of it, may result in severe civil and criminal penalties, and will be prosecuted to the maximum extent possible under the law.** This draft was produced by AIA software at 12:33:47 on 05/14/2009 under Order No.1000392252_1 which expires on 4/23/2010, and is not for resale.
User Notes: BRIDGE A201 Non-Homeownership (6-18-09) (6) (1111997498)

~~**§ 11.1.2** The insurance required by Section 11.1.1 shall be written for not less than limits of liability specified in the Contract Documents or required by law, whichever coverage is greater. Coverages, whether written on an occurrence or claims-made basis, shall be maintained without interruption from the date of commencement of the Work until the date of final payment and termination of any coverage required to be maintained after final payment, and, with respect to the Contractor's completed operations coverage, until the expiration of the period for correction of Work or for such other period for maintenance of completed operations coverage as specified in the Contract Documents.~~

~~**§ 11.1.3** Certificates of insurance acceptable to the Owner shall be filed with the Owner prior to commencement of the Work and thereafter upon renewal or replacement of each required policy of insurance. These certificates and the insurance policies required by this Section 11.1 shall contain a provision that coverages afforded under the policies will not be canceled or allowed to expire until at least 30 days' prior written notice has been given to the Owner. An additional certificate evidencing continuation of liability coverage, including coverage for completed operations, shall be submitted with the final Application for Payment as required by Section 9.10.2 and thereafter upon renewal or replacement of such coverage until the expiration of the time required by Section 11.1.2. Information concerning reduction of coverage on account of revised limits or claims paid under the General Aggregate, or both, shall be furnished by the Contractor with reasonable promptness.~~

~~**§ 11.1.4** The Contractor shall cause the commercial liability coverage required by the Contract Documents to include (1) the Owner, the Architect and the Architect's Consultants as additional insureds for claims caused in whole or in part by the Contractor's negligent acts or omissions during the Contractor's operations; and (2) the Owner as an additional insured for claims caused in whole or in part by the Contractor's negligent acts or omissions during the Contractor's completed operations.~~

§ 11.2 OWNER'S LIABILITY INSURANCE

The Owner shall be responsible for purchasing and maintaining the Owner's usual liability insurance, as Owner deems necessary.

§ 11.3 PROPERTY INSURANCE

§ 11.3.1 Unless otherwise provided, the Owner shall purchase and maintain, in a company or companies lawfully authorized to do business in the jurisdiction in which the Project is located, property insurance written on a builder's risk "all-risk" or equivalent policy form in the amount of the initial Contract Sum, plus value of subsequent Contract Modifications and cost of materials supplied or installed by others, comprising total value for the entire Project at the site on a replacement cost basis without optional deductibles. Such property insurance shall be maintained, unless otherwise provided in the Contract Documents or otherwise agreed in writing by all persons and entities who are beneficiaries of such insurance, until final payment has been made as provided in Section 9.10 or until no person or entity other than the Owner has an insurable interest in the property required by this Section 11.3 to be covered, whichever is later. This insurance shall include interests of the Owner, the Contractor, Subcontractors and Sub-subcontractors in the Project.

§ 11.3.1.1 Property insurance shall be on an "all-risk" or equivalent policy form and shall include, without limitation, insurance against the perils of fire (with extended coverage) and physical loss or damage including, without duplication of coverage, theft, vandalism, malicious mischief, collapse, ~~earthquake,~~ flood (if the site is in a flood zone), windstorm, falsework, testing and startup, temporary buildings and debris removal including demolition occasioned by enforcement of any applicable legal requirements, and shall cover reasonable compensation for Architect's and Contractor's services and expenses required as a result of such insured loss.

§ 11.3.1.2 If the Owner does not intend to purchase such property insurance required by the Contract and with all of the coverages in the amount described above, the Owner shall so inform the Contractor in writing prior to commencement of the Work. The Contractor may then effect insurance that will protect the interests of the Contractor, Subcontractors and Sub-subcontractors in the Work, and by appropriate Change Order the cost thereof shall be charged to the Owner. If the Contractor is damaged by the failure or neglect of the Owner to purchase or maintain insurance as described above, without so notifying the Contractor in writing, then the Owner shall bear all reasonable costs properly attributable thereto.

AIA Document A201™ – 2007. Copyright © 1911, 1915, 1918, 1925, 1937, 1951, 1958, 1961, 1963, 1966, 1970, 1976, 1987, 1997 and 2007 by The American Institute of Architects. **All rights reserved. WARNING: This AIA® Document is protected by U.S. Copyright Law and International Treaties. Unauthorized reproduction or distribution of this AIA® Document, or any portion of it, may result in severe civil and criminal penalties, and will be prosecuted to the maximum extent possible under the law.** This draft was produced by AIA software at 12:33:47 on 05/14/2009 under Order No.1000392252_1 which expires on 4/23/2010, and is not for resale.
User Notes: BRIDGE A201 Non-Homeownership (6-18-09) (6) (1111997498)

§ 11.3.1.3 If the property insurance requires deductibles, the Owner shall pay costs not covered because of such deductibles. Notwithstanding the foregoing, if the cause of any loss payment under such insurance is the fault of the Contractor, then the Contractor shall pay such deductible.

Formatted: Font: Bold

§ 11.3.1.4 This property insurance shall cover portions of the Work stored off the site, and also portions of the Work in transit.

§ 11.3.1.5 Partial occupancy or use in accordance with Section 9.9 shall not commence until the insurance company or companies providing property insurance have consented to such partial occupancy or use by endorsement or otherwise. The Owner and the Contractor shall take reasonable steps to obtain consent of the insurance company or companies and shall, without mutual written consent, take no action with respect to partial occupancy or use that would cause cancellation, lapse or reduction of insurance.

§ 11.3.2 BOILER AND MACHINERY INSURANCE

The Owner shall purchase and maintain boiler and machinery insurance required by the Contract Documents or by law, which shall specifically cover such insured objects during installation and until final acceptance by the Owner; this insurance shall include interests of the Owner, Contractor, Subcontractors and Sub-subcontractors in the Work, and the Owner and Contractor shall be named insureds.

§ 11.3.3 LOSS OF USE INSURANCE

The Owner, at the Owner's option, may purchase and maintain such insurance as will insure the Owner against loss of use of the Owner's property due to fire or other hazards, however caused. The Owner waives all rights of action against the Contractor for loss of use of the Owner's property, including consequential losses due to fire or other hazards however caused to the extent (1) of actual recovery of any insurance proceeds under policies obtained pursuant to this Subparagraph 11.3.3 and (2) permitted by the applicable policies of insurance.

§ 11.3.4 If the Contractor requests in writing that insurance for risks other than those described herein or other special causes of loss be included in the property insurance policy, the Owner shall, if possible, include such insurance, and the cost thereof shall be charged to the Contractor by appropriate Change Order.

§ 11.3.5 If during the Project construction period the Owner insures properties, real or personal or both, at or adjacent to the site by property insurance under policies separate from those insuring the Project, or if after final payment property insurance is to be provided on the completed Project through a policy or policies other than those insuring the Project during the construction period, the Owner shall waive all rights in accordance with the terms of Section 11.3.7 for damages caused by fire or other causes of loss covered by this separate property insurance. All separate policies shall provide this waiver of subrogation by endorsement or otherwise.

§ 11.3.6 Before an exposure to loss may occur, the Owner shall file with the Contractor a ~~copy of each policy that includes~~certificate of insurance evidencing such insurance coverages required by this Section 11.3. Each policy shall contain all generally applicable conditions, definitions, exclusions and endorsements related to this Project. Each policy shall contain a provision that the policy will not be canceled or allowed to expire, and that its limits will not be reduced, until at least 30 days' prior written notice has been given to the Contractor.

§ 11.3.7 WAIVERS OF SUBROGATION

~~The~~ If permitted by the parties' insurance companies without penalty, the Owner and Contractor waive all rights against (1) each other and any of their subcontractors, sub-subcontractors, agents and employees, each of the other, and (2) the Architect, Architect's consultants, separate contractors described in Article 6, if any, and any of their subcontractors, sub-subcontractors, agents and employees, for damages caused by fire or other causes of loss to the extent of actual recovery of any insurance proceeds under any~~covered by~~ property insurance obtained pursuant to this Section 11.3 or other property insurance applicable to the Work, except such rights as they have to proceeds of such insurance held by the Owner in good faith.~~as fiduciary.~~ The Owner or Contractor, as appropriate, shall require of the Architect, Architect's consultants, separate contractors described in Article 6, if any, and the subcontractors, sub-subcontractors, agents and employees of any of them, by appropriate agreements, written where legally required for validity, similar waivers each in favor of other parties enumerated herein. The policies shall provide such waivers of subrogation by endorsement or otherwise. A waiver of subrogation shall be effective as to a person or entity even though that person or entity would otherwise have a duty of indemnification, contractual or otherwise, did not pay the insurance premium directly or indirectly, and whether or not the person or entity had an insurable interest in the property damaged.

AIA Document A201™ – 2007. Copyright © 1911, 1915, 1918, 1925, 1937, 1951, 1958, 1961, 1963, 1966, 1970, 1976, 1987, 1997 and 2007 by The American Institute of Architects. **All rights reserved. WARNING: This AIA® Document is protected by U.S. Copyright Law and International Treaties. Unauthorized reproduction or distribution of this AIA® Document, or any portion of it, may result in severe civil and criminal penalties, and will be prosecuted to the maximum extent possible under the law.** This draft was produced by AIA software at 12:33:47 on 05/14/2009 under Order No.1000392252_1 which expires on 4/23/2010, and is not for resale.
User Notes: BRIDGE A201 Non-Homeownership (6-18-09) (6) (1111997498)

§ 11.3.8 A loss insured under the Owner's property insurance shall be adjusted by the Owner ~~as fiduciary~~in good faith and made payable to the Owner in good faith~~as fiduciary~~ for the insureds, as their interests may appear, subject to requirements of any applicable mortgagee clause and of Section 11.3.10. The Contractor shall pay Subcontractors their just shares of insurance proceeds received by the Contractor, and by appropriate agreements, written where legally required for validity, shall require Subcontractors to make payments to their Sub-subcontractors in similar manner.

§ 11.3.9 If required in writing by a party in interest, the Owner in good faith~~as fiduciary~~ shall, upon occurrence of an insured loss, give bond for proper performance of the Owner's duties. The cost of required bonds shall be charged against proceeds received. ~~as fiduciary.~~ The Owner shall deposit in a separate account proceeds so received, which the Owner shall distribute in accordance with such agreement as the parties in interest may reach, or as determined in accordance with the method of binding dispute resolution selected in the Agreement between the Owner and Contractor. If after such loss no other special agreement is made and unless the Owner terminates the Contract for convenience, replacement of damaged property shall be performed by the Contractor after notification of a Change in the Work in accordance with Article 7.

§ 11.3.10 The Owner in good faith~~as fiduciary~~ shall have power to adjust and settle a loss with insurers unless one of the parties in interest shall object in writing within five days after occurrence of loss to the Owner's exercise of this power; if such objection is made, the dispute shall be resolved in the manner selected by the Owner and Contractor as the method of binding dispute resolution in the Agreement. If the Owner and Contractor have selected arbitration as the method of binding dispute resolution, the Owner ~~as fiduciary~~in good faith shall make settlement with insurers or, in the case of a dispute over distribution of insurance proceeds, in accordance with the directions of the arbitrators.

§ 11.4 PERFORMANCE BOND AND PAYMENT BOND

§ 11.4.1 The Contractor shall be required to furnish a Performance Bond and a Labor and Material (Payment) Bond, each bond to be in the amount of 100% of the Contract Sum as security for the faithful performance and payment of all obligations under the Contract Documents. These bonds shall be in such form and with such sureties as are licensed in the State of California and are named in the current list of "Surety Companies Acceptable on Federal Bonds" as published in the Federal Register by the Audit Staff Bureau of Accounts, U.S. Treasury Department and for amounts which are not in excess of the acceptable amount set forth on such list for the respective surety.~~The Owner shall have the right to require the Contractor to furnish bonds covering faithful performance of the Contract and payment of obligations arising thereunder as stipulated in bidding requirements or specifically required in the Contract Documents on the date of execution of the Contract.~~

§ 11.4.2 Upon the request of any person or entity appearing to be a potential beneficiary of bonds covering payment of obligations arising under the Contract, the Contractor shall promptly furnish a copy of the bonds or shall permit a copy to be made.~~Upon the request of any person or entity appearing to be a potential beneficiary of bonds covering payment of obligations arising under the Contract, the Contractor shall promptly furnish a copy of the bonds or shall authorize a copy to be furnished.~~

ARTICLE 12 UNCOVERING AND CORRECTION OF WORK

§ 12.1 UNCOVERING OF WORK

§ 12.1.1 If a portion of the Work is covered contrary to the Architect's or Owner's request or to requirements specifically expressed in the Contract Documents, it must, if requested in writing by the Architect or the Owner, be uncovered for the Architect's or Owner's examination and be replaced at the Contractor's expense without change in the Contract Time or Contract Sum.

§ 12.1.2 If a portion of the Work has been covered that the Architect or the Owner has not specifically requested to examine prior to its being covered the Owner, the Architect with the consent of the Owner may request to see such Work and it shall be uncovered by the Contractor. If such Work is in accordance with the Contract Documents, costs of uncovering and replacement shall, by appropriate Change Order, be at the Owner's expense. If such Work is not in accordance with the Contract Documents, such costs and the cost of correction shall be at the Contractor's expense unless the condition was caused by the Owner or a separate contractor in which event the Owner shall be responsible for payment of such costs.

AIA Document A201™ – 2007. Copyright © 1911, 1915, 1918, 1925, 1937, 1951, 1958, 1961, 1963, 1966, 1970, 1976, 1987, 1997 and 2007 by The American Institute of Architects. **All rights reserved. WARNING: This AIA® Document is protected by U.S. Copyright Law and International Treaties. Unauthorized reproduction or distribution of this AIA® Document, or any portion of it, may result in severe civil and criminal penalties, and will be prosecuted to the maximum extent possible under the law.** This draft was produced by AIA software at 12:33:47 on 05/14/2009 under Order No.1000392252_1 which expires on 4/23/2010, and is not for resale.
User Notes: BRIDGE A201 Non-Homeownership (6-18-09) (6) (1111997498)

§ 12.2 CORRECTION OF WORK

§ 12.2.1 BEFORE OR AFTER SUBSTANTIAL COMPLETION

The Contractor shall promptly correct Work rejected by the Architect or the Owner or failing to conform to the requirements of the Contract Documents, or damaged by the Contractor, Subcontractor or anyone for whom any of them is responsible whether discovered before or after Substantial Completion and whether or not fabricated, installed or completed. Costs of correcting such rejected Work, including additional testing and inspections, the cost of uncovering and replacement, and compensation for the Architect's services and expenses made necessary thereby, shall be at the Contractor's expense. If prior to the date of Substantial Completion the Contractor, a Subcontractor, or any for whom either is responsible uses or damages any portion of the Work, including, without limitation, mechanical, electrical, plumbing, and other building systems, machinery, equipment, or other mechanical device, the Contractor shall cause such item to be restored to "like new" condition at no expense to the Owner. In addition, the Contractor shall promptly remedy damage and loss arising in conjunction with the Project caused in whole or in part by the Contractor, a Subcontractor, a Sub-subcontractor, or any directly or indirectly employed by any of them, or anyone for whose acts they may be liable and for which the Contractor is responsible.

§ 12.2.2 AFTER SUBSTANTIAL COMPLETION

§ 12.2.2.1 In addition to and not in limitation of the Contractor's obligations under Section 3.5, or any other obligation under the Contract Documents if, within one year after the date of Substantial Completion of the Work or designated portion thereof or after the date for commencement of warranties established under Section 9.9.1, or by terms of an applicable special warranty required by the Contract Documents, any of the Work is found to be not in accordance with the requirements of the Contract Documents, the Contractor shall correct it promptly after receipt of written notice from the Owner to do so unless the Owner has previously given the Contractor a written acceptance of such condition. This obligation shall apply to any repair or replacement part of the Work that is damaged by the defective Work. ~~The Owner shall give such notice promptly after discovery of the condition. During the one-year period for correction of Work, if the Owner fails to notify the Contractor and give the Contractor an opportunity to make the correction, the Owner waives the rights to require correction by the Contractor and to make a claim for breach of warranty.~~ If the Contractor fails to correct nonconforming Work within ~~a reasonable time during that period~~seven (7) days after receipt of notice from the Owner or Architect, or fails to diligently prosecute such correction to completion the Owner may correct it in accordance with Section 2.4.

§ 12.2.2.2 The one-year period for correction of Work shall be extended with respect to portions of Work first performed after Substantial Completion by the period of time between Substantial Completion and the actual completion of that portion of the Work.

§ 12.2.2.3 Upon completion of any Work under or pursuant to this paragraph 12.2, the one (1) year correction period in connection with the Work requiring correction shall be renewed and recommence. The obligations under paragraph 12.2 shall cover any repairs and replacement to any part of the Work or other property that is damaged by the defective Work.~~The one-year period for correction of Work shall not be extended by corrective Work performed by the Contractor pursuant to this Section 12.2.~~

§ 12.2.3 The Contractor shall remove from the site portions of the Work that are not in accordance with the requirements of the Contract Documents and are neither corrected by the Contractor nor accepted by the Owner.

§ 12.2.4 The Contractor shall bear the cost of correcting destroyed or damaged construction, whether completed or partially completed, of the Owner or separate contractors caused by the Contractor's correction or removal of Work that is not in accordance with the requirements of the Contract Documents.

§ 12.2.5 Nothing contained in this Section 12.2 shall be construed to establish a period of limitation with respect to other obligations the Contractor has under the Contract Documents. Enforcement of the Contractor's repair obligation shall be in addition to and not in limitation of any other rights or remedies available to the Owner. Establishment of the one-year period for correction of Work as described in Section 12.2.2 relates only to the specific obligation of the Contractor to correct the Work, and has no relationship to the time within which the obligation to comply with the Contract Documents may be sought to be enforced, nor to the time within which proceedings may be commenced to establish the Contractor's liability with respect to the Contractor's obligations other than specifically to correct the Work.

AIA Document A201™ – 2007. Copyright © 1911, 1915, 1918, 1925, 1937, 1951, 1958, 1961, 1963, 1966, 1970, 1976, 1987, 1997 and 2007 by The American Institute of Architects. **All rights reserved. WARNING: This AIA® Document is protected by U.S. Copyright Law and International Treaties. Unauthorized reproduction or distribution of this AIA® Document, or any portion of it, may result in severe civil and criminal penalties, and will be prosecuted to the maximum extent possible under the law.** This draft was produced by AIA software at 12:33:47 on 05/14/2009 under Order No.1000392252_1 which expires on 4/23/2010, and is not for resale.
User Notes: BRIDGE A201 Non-Homeownership (6-18-09) (6) (1111997498)

§ 12.3 ACCEPTANCE OF NONCONFORMING WORK
If the Owner prefers to accept Work that is not in accordance with the requirements of the Contract Documents, the Owner may do so instead of requiring its removal and correction, in which case the Contract Sum will be reduced as appropriate and equitable. Such adjustment shall be effected whether or not final payment has been made.

ARTICLE 13 MISCELLANEOUS PROVISIONS
§ 13.1 GOVERNING LAW
The Contract shall be governed by the laws of the State of California. ~~place where the Project is located except that, if the parties have selected arbitration as the method of binding dispute resolution, the Federal Arbitration Act shall govern Section 15.4.~~

§ 13.2 SUCCESSORS AND ASSIGNS
§ 13.2.1 The Owner and Contractor respectively bind themselves, their partners, successors, assigns and legal representatives to covenants, agreements and obligations contained in the Contract Documents. ~~Except as provided in Section 13.2.2, neither party to t~~The Contractor shall not assign the Contract as a whole without written consent of the ~~other~~Owner. If ~~either party~~the Contractor attempts to make such an assignment without such consent, ~~that party~~the Contractor shall nevertheless remain legally responsible for all obligations under the Contract.

§ 13.2.2 The Owner may, without consent of the Contractor, assign the Contract to a lender providing construction financing for the Project, if the lender assumes the Owner's rights and obligations under the Contract Documents. The Contractor shall execute all consents reasonably required to facilitate such assignment.

§ 13.3 WRITTEN NOTICE
Written notice shall be deemed to have been duly served if delivered in person to the individual, to a member of the firm or entity, or to an officer of the corporation for which it was intended; or if delivered at, or sent by registered or certified mail or by courier service providing proof of delivery to, the last business address known to the party giving notice.

§ 13.4 RIGHTS AND REMEDIES
§ 13.4.1 Except as expressly provided in the Contract Documents, ~~D~~duties and obligations imposed by the Contract Documents and rights and remedies available thereunder shall be in addition to and not a limitation of duties, obligations, rights and remedies otherwise imposed or available by law.

§ 13.4.2 No waiver shall be implied from any delay or failure by the Owner to take action on any breach of the Contractor or to pursue any remedy allowed under the Contract or applicable law. Any extension of time granted to Contractor to perform any obligation under the Contract shall not operate as a waiver or release from any of its obligations under the Contract. Consent by the Owner to any act or omission by the Contractor shall not be construed to be a consent to any other or subsequent act or omission or to waive the requirement for the Owner's written consent to future waivers.

§13.4.3 Titles of articles, paragraphs and subparagraphs are for convenience only and neither limit nor amplify the provisions of this Contract in itself. Wherever possible, each provision of the Contract shall be interpreted in a manner as to be effective and valid under applicable law. If, however, any provision of the Contract, or portion thereof, is prohibited by law or found invalid under any law, only such provision or portion thereof shall be ineffective, without in any manner invalidating or affecting the remaining provisions of the Contract or valid portions of such provisions, which are hereby deemed severable.

§ 13.4.4 Nothing expressed or implied in the Contract is intended or shall be construed to confer upon or give any person or entity, others than the parties hereto, any right or remedies under or by reason of the Contract.

§13.4.5 In any action or proceeding to enforce, arising of, alleging breach of, or for declaratory relief with regard to the Contract, the prevailing party shall be entitled to recover its reasonable attorneys' fees and other costs associated with the action or proceeding.

§13.4.6 Each party hereto agrees to do all acts and things and to make, execute and deliver such written instruments, as shall from time to time be reasonably required to carry out the terms and provisions of the Contract Documents.

AIA Document A201™ – 2007. Copyright © 1911, 1915, 1918, 1925, 1937, 1951, 1958, 1961, 1963, 1966, 1970, 1976, 1987, 1997 and 2007 by The American Institute of Architects. **All rights reserved. WARNING: This AIA® Document is protected by U.S. Copyright Law and International Treaties. Unauthorized reproduction or distribution of this AIA® Document, or any portion of it, may result in severe civil and criminal penalties, and will be prosecuted to the maximum extent possible under the law.** This draft was produced by AIA software at 12:33:47 on 05/14/2009 under Order No.1000392252_1 which expires on 4/23/2010, and is not for resale.
User Notes: BRIDGE A201 Non-Homeownership (6-18-09) (6) (1111997498)

§13.4.7 Any specific requirement in the Contract that the responsibilities or obligations of the Contractor also apply to a Subcontractor is added for emphasis and is also hereby deemed to include a Subcontractor of any tier. The omission of a reference to a Subcontractor in connection with any of the Contractor's responsibilities or obligations shall not be construed to diminish, abrogate, or limit any responsibilities or obligations of a subcontractor of any tier under the Contract Documents or the applicable subcontract.~~No action or failure to act by the Owner, Architect or Contractor shall constitute a waiver of a right or duty afforded them under the Contract, nor shall such action or failure to act constitute approval of or acquiescence in a breach there under, except as may be specifically agreed in writing.~~

§ 13.5 TESTS AND INSPECTIONS

§ 13.5.1 Tests, inspections and approvals of portions of the Work shall be made as required by the Contract Documents and by applicable laws, statutes, ordinances, codes, rules and regulations or lawful orders of public authorities. Unless otherwise provided, the ~~Contractor~~ Owner shall make arrangements for such tests, inspections and approvals with an independent testing laboratory or entity acceptable to the Owner, or with the appropriate public authority, and shall bear all related costs of tests, inspections and approvals. ~~The Contractor shall give the Architect timely notice of when and where tests and inspections are to be made so that the Architect may be present for such procedures.~~ The Owner shall bear costs of (1) tests, inspections or approvals that do not become requirements until after bids are received or negotiations concluded, and (2) tests, inspections or approvals where building codes or applicable laws or regulations prohibit the Owner from delegating their cost to the Contractor.

§ 13.5.2 If the Architect, Owner or public authorities having jurisdiction determine that portions of the Work require additional testing, inspection or approval not included under Section 13.5.1, the Architect will, upon written authorization from the Owner, instruct the Contractor to make arrangements for such additional testing, inspection or approval by an entity acceptable to the Owner, and the Contractor shall give timely notice to the Architect of when and where tests and inspections are to be made so that the Architect may be present for such procedures. Such costs, except as provided in Section 13.5.3, shall be at the Owner's expense.

§ 13.5.3 If such procedures for testing, inspection or approval under Sections 13.5.1 and 13.5.2 reveal failure of the portions of the Work to comply with requirements established by the Contract Documents, all costs made necessary by such failure including those of repeated procedures and compensation for the Architect's services and expenses shall be at the Contractor's expense. The Contractor also agrees that the cost of testing services required for the convenience of the Contractor in his scheduling and performance of the Work, and the cost of testing services related to remedial operations performed to correct deficiencies in the Work, shall be borne by the Contractor.

§ 13.5.4 Required certificates of testing, inspection or approval shall, unless otherwise required by the Contract Documents, be secured by the Contractor and promptly delivered to the Architect.

§ 13.5.5 If the Architect is to observe tests, inspections or approvals required by the Contract Documents, the Architect will do so promptly and, where practicable, at the normal place of testing.

§ 13.5.6 Tests or inspections conducted pursuant to the Contract Documents shall be made promptly to avoid unreasonable delay in the Work.

§ 13.6 INTEREST

Payments due and unpaid under the Contract Documents shall bear interest from the date payment is due at such rate as the parties may agree upon in writing or, in the absence thereof, at the legal rate prevailing from time to time at the place where the Project is located.

§ 13.7 TIME LIMITS ON CLAIMS

All statutes of limitation shall be consistent with California law.~~The Owner and Contractor shall commence all claims and causes of action, whether in contract, tort, breach of warranty or otherwise, against the other arising out of or related to the Contract in accordance with the requirements of the final dispute resolution method selected in the Agreement within the time period specified by applicable law, but in any case not more than 10 years after the date of Substantial Completion of the Work. The Owner and Contractor waive all claims and causes of action not commenced in accordance with this Section 13.7.~~

AIA Document A201™ – 2007. Copyright © 1911, 1915, 1918, 1925, 1937, 1951, 1958, 1961, 1963, 1966, 1970, 1976, 1987, 1997 and 2007 by The American Institute of Architects. **All rights reserved. WARNING: This AIA® Document is protected by U.S. Copyright Law and International Treaties. Unauthorized reproduction or distribution of this AIA® Document, or any portion of it, may result in severe civil and criminal penalties, and will be prosecuted to the maximum extent possible under the law.** This draft was produced by AIA software at 12:33:47 on 05/14/2009 under Order No.1000392252_1 which expires on 4/23/2010, and is not for resale.
User Notes: BRIDGE A201 Non-Homeownership (6-18-09) (6) (1111997498)

ARTICLE 14 TERMINATION OR SUSPENSION OF THE CONTRACT

§ 14.1 TERMINATION BY THE CONTRACTOR

§ 14.1.1 The Contractor may terminate the Contract if the Work is stopped for a period of ~~30~~0 consecutive days through no act or fault of the Contractor or a Subcontractor, Sub-subcontractor or their agents or employees or any other persons or entities performing portions of the Work under direct or indirect contract with the Contractor, for any of the following reasons:

- **.1** Issuance of an order of a court or other public authority having jurisdiction that requires all Work to be stopped;
- **.2** An act of government, such as a declaration of national emergency that requires all Work to be stopped;
- ~~**.3** Because the Architect has not issued a Certificate for Payment and has not notified the Contractor of the reason for withholding certification as provided in Section 9.4.1, or because the Owner has not made payment on a Certificate for Payment within the time stated in the Contract Documents; or~~
- ~~**.4** The Owner has failed to furnish to the Contractor promptly, upon the Contractor's request, reasonable evidence as required by Section 2.2.1.~~

§ 14.1.2 The Contractor may terminate the Contract if, through no act or fault of the Contractor or a Subcontractor, Sub-subcontractor or their agents or employees or any other persons or entities performing portions of the Work under direct or indirect contract with the Contractor, repeated suspensions, delays or interruptions of the entire Work by the Owner as described in Section 14.3 constitute in the aggregate more than 100 percent of the total number of days scheduled for completion, or 120 days in any 365-day period, whichever is less.

§ 14.1.3 If one of the reasons described in Section 14.1.1 ~~or~~, 14.1.2, or 14.1.4 exists, the Contractor may, upon seven days' written notice to the Owner and Architect, terminate the Contract and recover from the Owner payment for Work executed in accordance with the Contract Documents, including reasonable overhead and profit, costs incurred by reason of such termination, and actual damages; provided, however, the Contractor shall not be entitled to damages for termination under Section 14.1.1.1 and 14.1.1.2. The Owner shall be credited for (i) payments previously made to the Contractor for the terminated portion of the Work, (ii) claims that the Owner has against the Contractor under the Contract, and (iii) the value of the materials, supplies, equipment, or other items that are to be disposed of by the Contractor that are part of the Contract Sum. Such payment shall be the sole and exclusive remedy to which Contractor is entitled for termination pursuant to Sections 14.1.1, 14.1.2 and 14.1.4.

§ 14.1.4 If the Work is stopped for a period of 60 consecutive days through no act or fault of the Contractor or a Subcontractor or their agents or employees or any other persons performing portions of the Work under contract with the Contractor because the Owner has repeatedly failed to fulfill the Owner's obligations under the Contract Documents with respect to matters important to the progress of the Work, the Contractor may, upon seven additional days' written notice to the Owner and the Architect, terminate the Contract and recover from the Owner as provided in Section 14.1.3.

§ 14.2 TERMINATION BY THE OWNER FOR CAUSE

§ 14.2.1 The Owner may terminate the Contract if the Contractor

- **.1** repeatedly refuses or fails to supply enough properly skilled workers or proper materials;
- **.2** fails to make payment to Subcontractors for materials or labor in accordance with the respective agreements between the Contractor and the Subcontractors;
- **.3** repeatedly disregards applicable laws, statutes, ordinances, codes, rules and regulations, or lawful orders of a public authority; or
- **.4** otherwise is ~~guilty of substantial~~in breach of a provision of the Contract Documents.

§ 14.2.2 When any of the above reasons exist, the Owner, ~~upon certification by the Initial Decision Maker that sufficient cause exists to justify such action,~~ may without prejudice to any other rights or remedies of the Owner and after giving the Contractor and the Contractor's surety, if any, seven days' written notice, terminate employment of the Contractor and may, subject to any prior rights of the surety:

- **.1** Exclude the Contractor from the site and take possession of all materials, equipment, tools, and construction equipment and machinery thereon owned by the Contractor;
- **.2** Accept assignment of subcontracts pursuant to Section 5.4; and
- **.3** Finish the Work by whatever reasonable method the Owner may deem expedient. Upon written request of the Contractor, the Owner shall furnish to the Contractor a detailed accounting of the costs incurred by the Owner in finishing the Work.

AIA Document A201™ – 2007. Copyright © 1911, 1915, 1918, 1925, 1937, 1951, 1958, 1961, 1963, 1966, 1970, 1976, 1987, 1997 and 2007 by The American Institute of Architects. **All rights reserved. WARNING: This AIA® Document is protected by U.S. Copyright Law and International Treaties. Unauthorized reproduction or distribution of this AIA® Document, or any portion of it, may result in severe civil and criminal penalties, and will be prosecuted to the maximum extent possible under the law.** This draft was produced by AIA software at 12:33:47 on 05/14/2009 under Order No.1000392252_1 which expires on 4/23/2010, and is not for resale.
User Notes: BRIDGE A201 Non-Homeownership (6-18-09) (6) (1111997498)

§ 14.2.3 When the Owner terminates the Contract for one of the reasons stated in Section 14.2.1, the Contractor shall not be entitled to receive further payment until all conditions set forth in Section 9.10 have been satisfied.~~the Work is finished.~~

§ 14.2.4 ~~If the unpaid balance of the Contract Sum exceeds costs of finishing the Work, including compensation for the Architect's services and expenses made necessary thereby, and other damages incurred by the Owner and not expressly waived, such excess shall be paid to the Contractor.~~ If such costs of finishing the Work~~-~~ and all damages related thereto exceed the unpaid balance, then the Contractor shall pay the difference to the Owner. ~~The amount to be paid to the Contractor or Owner, as the case may be, shall be certified by the Initial Decision Maker, upon application, and t~~This obligation for payment shall survive termination of the Contract.

§ 14.3 SUSPENSION BY THE OWNER FOR CONVENIENCE

§ 14.3.1 The Owner may, without cause, order the Contractor in writing to suspend, delay or interrupt the Work in whole or in part for such period of time as the Owner may determine.

§ 14.3.2 The Contract Sum and Contract Time shall be adjusted for increases in the cost and time caused by suspension, delay or interruption as described in Section 14.3.1. Adjustment of the Contract Sum shall include profit. No adjustment shall be made to the extent

- **.1** that performance is, was or would have been so suspended, delayed or interrupted by another cause for which the Contractor is responsible; or
- **.2** that an equitable adjustment is made or denied under another provision of the Contract.

§ 14.4 TERMINATION BY THE OWNER FOR CONVENIENCE

§ 14.4.1 The Owner may, at any time, terminate the Contract for the Owner's convenience and without cause.

§ 14.4.2 Upon receipt of written notice from the Owner of such termination for the Owner's convenience, the Contractor shall

- **.1** cease operations as directed by the Owner in the notice;
- **.2** take actions necessary, or that the Owner may direct, for the protection and preservation of the Work; and
- **.3** except for Work directed to be performed prior to the effective date of termination stated in the notice, terminate all existing subcontracts and purchase orders and enter into no further subcontracts and purchase orders.

§ 14.4.3 Upon such termination, the Contractor shall recover as its sole remedy payment for work properly performed in connection with the terminated portion of the Work prior to the effective date of termination and for items properly and timely fabricated off the project site, delivered and stored in accordance with the Owner's instructions. The Contractor hereby waives and forfeits all other claims for payment and damages, including, without limitation, anticipated profits. The Owner shall be credited for (i) payments previously made to the Contractor for the terminated portion of the Work, (ii) claims that the Owner has against the Contractor under the Contract, and (iii) the value of the materials, supplies, equipment, or other items that are to be disposed of by the Contractor that are part of the Contract Sum.~~In case of such termination for the Owner's convenience, the Contractor shall be entitled to receive payment for Work executed, and costs incurred by reason of such termination, along with reasonable overhead and profit on the Work not executed.~~

ARTICLE 15 CLAIMS AND DISPUTES

§ 15.1 CLAIMS

§ 15.1.1 DEFINITION

A Claim is a demand or assertion by one of the parties seeking, as a matter of right, payment of money, or other relief with respect to the terms of the Contract. The term "Claim" also includes other disputes and matters in question between the Owner and Contractor arising out of or relating to the Contract. The responsibility to substantiate Claims shall rest with the party making the Claim.

§ 15.1.2 NOTICE OF CLAIMS

Claims by either the Owner or Contractor must be initiated by written notice to the other party. ~~and to the Initial Decision Maker with a copy sent to the Architect, if the Architect is not serving as the Initial Decision Maker.~~ Claims by either party must be initiated within 21 days after occurrence of the event giving rise to such Claim or

AIA Document A201™ – 2007. Copyright © 1911, 1915, 1918, 1925, 1937, 1951, 1958, 1961, 1963, 1966, 1970, 1976, 1987, 1997 and 2007 by The American Institute of Architects. **All rights reserved. WARNING: This AIA® Document is protected by U.S. Copyright Law and International Treaties. Unauthorized reproduction or distribution of this AIA® Document, or any portion of it, may result in severe civil and criminal penalties, and will be prosecuted to the maximum extent possible under the law.** This draft was produced by AIA software at 12:33:47 on 05/14/2009 under Order No.1000392252_1 which expires on 4/23/2010, and is not for resale.
User Notes: BRIDGE A201 Non-Homeownership (6-18-09) (6) (1111997498)

within 21 days after the claimant first recognizes the condition giving rise to the Claim, whichever is later. The claimant shall use its best efforts to furnish the other party, as expeditiously as possible, with written notice of any Claim, including, without limitation, those in connection with concealed or unknown conditions, once such claim is recognized, and shall cooperate with the party against whom the claim is made in any effort to mitigate the alleged or potential damages, delay, or other adverse consequences arising out of the condition that is cause of such a Claim.

§ 15.1.3 CONTINUING CONTRACT PERFORMANCE

Pending final resolution of a Claim, except as otherwise agreed in writing or as provided in Section 9.7 and Article 14, the Contractor shall proceed diligently with performance of the Contract and the Owner shall continue to make payments in accordance with the Contract Documents. ~~The Architect will prepare Change Orders and issue Certificates for Payment in accordance with the decisions of the Initial Decision Maker.~~

§ 15.1.4 CLAIMS FOR ADDITIONAL COST

If the Contractor wishes to make a Claim for an increase in the Contract Sum, written notice as provided herein shall be given before proceeding to execute the Work. Prior notice is not required for Claims relating to an emergency endangering life or property arising under Section 10.4. All claims for additions to the Contract Sum shall be made in accordance with the Change Order procedure set forth in Article 7.

§ 15.1.5 CLAIMS FOR ADDITIONAL TIME

§ 15.1.5.1 If the Contractor wishes to make a Claim for an increase in the Contract Time, written notice as provided herein shall be given. The Contractor's Claim shall include an estimate of cost and of probable effect of delay on progress of the Work. In the case of a continuing delay, only one Claim is necessary. All claims for additions to the Contract Time shall be made in accordance with the Change Order procedure set forth in Article 7.

§ 15.1.5.2 If adverse weather conditions are the basis for a Claim for additional time, such Claim shall be documented by data substantiating that weather conditions were abnormal for the period of time, could not have been reasonably anticipated and had an adverse effect on the scheduled construction.

§ 15.1.6 CLAIMS FOR CONSEQUENTIAL DAMAGES

Notwithstanding anything in this Contract to the contrary, the Owner shall not be liable to the Contractor for special consequential damages of any type or for any cause, including contract claims or tort claims. ~~The Contractor and Owner waive Claims against each other for consequential damages arising out of or relating to this Contract. This mutual waiver includes~~

~~.1 damages incurred by the Owner for rental expenses, for losses of use, income, profit, financing, business and reputation, and for loss of management or employee productivity or of the services of such persons; and~~

~~.2 damages incurred by the Contractor for principal office expenses including the compensation of personnel stationed there, for losses of financing, business and reputation, and for loss of profit except anticipated profit arising directly from the Work.~~

~~This mutual waiver is applicable, without limitation, to all consequential damages due to either party's termination in accordance with Article 14. Nothing contained in this Section 15.1.6 shall be deemed to preclude an award of liquidated damages, when applicable, in accordance with the requirements of the Contract Documents.~~

§ 15.2 INITIAL DECISION

§ 15.2.1 INTENTIONALLY DELETED~~OMITTED~~~~Claims, excluding those arising under Sections 10.3, 10.4, 11.3.9, and 11.3.10, shall be referred to the Initial Decision Maker for initial decision. The Architect will serve as the Initial Decision Maker, unless otherwise indicated in the Agreement. Except for those Claims excluded by this Section 15.2.1, an initial decision shall be required as a condition precedent to mediation of any Claim arising prior to the date final payment is due, unless 30 days have passed after the Claim has been referred to the Initial Decision Maker with no decision having been rendered. Unless the Initial Decision Maker and all affected parties agree, the Initial Decision Maker will not decide disputes between the Contractor and persons or entities other than the Owner.~~

~~**§ 15.2.2** The Initial Decision Maker will review Claims and within ten days of the receipt of a Claim take one or more of the following actions: (1) request additional supporting data from the claimant or a response with supporting data from the other party, (2) reject the Claim in whole or in part, (3) approve the Claim, (4) suggest a compromise, or (5) advise the parties that the Initial Decision Maker is unable to resolve the Claim if the Initial Decision Maker lacks sufficient information to evaluate the merits of the Claim or if the Initial Decision Maker concludes that, in the~~

AIA Document A201™ – 2007. Copyright © 1911, 1915, 1918, 1925, 1937, 1951, 1958, 1961, 1963, 1966, 1970, 1976, 1987, 1997 and 2007 by The American Institute of Architects. **All rights reserved. WARNING: This AIA® Document is protected by U.S. Copyright Law and International Treaties. Unauthorized reproduction or distribution of this AIA® Document, or any portion of it, may result in severe civil and criminal penalties, and will be prosecuted to the maximum extent possible under the law.** This draft was produced by AIA software at 12:33:47 on 05/14/2009 under Order No.1000392252_1 which expires on 4/23/2010, and is not for resale.
User Notes: BRIDGE A201 Non-Homeownership (6-18-09) (6) (1111997498)

~~Initial Decision Maker's sole discretion, it would be inappropriate for the Initial Decision Maker to resolve the Claim.~~

~~**§ 15.2.3** In evaluating Claims, the Initial Decision Maker may, but shall not be obligated to, consult with or seek information from either party or from persons with special knowledge or expertise who may assist the Initial Decision Maker in rendering a decision. The Initial Decision Maker may request the Owner to authorize retention of such persons at the Owner's expense.~~

~~**§ 15.2.4** If the Initial Decision Maker requests a party to provide a response to a Claim or to furnish additional supporting data, such party shall respond, within ten days after receipt of such request, and shall either (1) provide a response on the requested supporting data, (2) advise the Initial Decision Maker when the response or supporting data will be furnished or (3) advise the Initial Decision Maker that no supporting data will be furnished. Upon receipt of the response or supporting data, if any, the Initial Decision Maker will either reject or approve the Claim in whole or in part.~~

~~**§ 15.2.5** The Initial Decision Maker will render an initial decision approving or rejecting the Claim, or indicating that the Initial Decision Maker is unable to resolve the Claim. This initial decision shall (1) be in writing; (2) state the reasons therefor; and (3) notify the parties and the Architect, if the Architect is not serving as the Initial Decision Maker, of any change in the Contract Sum or Contract Time or both. The initial decision shall be final and binding on the parties but subject to mediation and, if the parties fail to resolve their dispute through mediation, to binding dispute resolution.~~

~~**§ 15.2.6** Either party may file for mediation of an initial decision at any time, subject to the terms of Section 15.2.6.1.~~

~~**§ 15.2.6.1** Either party may, within 30 days from the date of an initial decision, demand in writing that the other party file for mediation within 60 days of the initial decision. If such a demand is made and the party receiving the demand fails to file for mediation within the time required, then both parties waive their rights to mediate or pursue binding dispute resolution proceedings with respect to the initial decision.~~

~~**§ 15.2.7** In the event of a Claim against the Contractor, the Owner may, but is not obligated to, notify the surety, if any, of the nature and amount of the Claim. If the Claim relates to a possibility of a Contractor's default, the Owner may, but is not obligated to, notify the surety and request the surety's assistance in resolving the controversy.~~

~~**§ 15.2.8** If a Claim relates to or is the subject of a mechanic's lien, the party asserting such Claim may proceed in accordance with applicable law to comply with the lien notice or filing deadlines.~~

§ 15.3 MEDIATION

§ 15.3.1 The parties acknowledge that in certain circumstances non-binding mediation may be the most productive and efficient method of resolving a dispute. The parties hereby agree, without binding themselves to choose mediation, to consider in their sole discretion, the use of mediation prior to resolving any dispute in accordance with Section 15.4, Arbitration below.~~Claims, disputes, or other matters in controversy arising out of or related to the Contract except those waived as provided for in Sections 9.10.4, 9.10.5, and 15.1.6 shall be subject to mediation as a condition precedent to binding dispute resolution.~~

~~**§ 15.3.2** The parties shall endeavor to resolve their Claims by mediation which, unless the parties mutually agree otherwise, shall be administered by the American Arbitration Association in accordance with its Construction Industry Mediation Procedures in effect on the date of the Agreement. A request for mediation shall be made in writing, delivered to the other party to the Contract, and filed with the person or entity administering the mediation. The request may be made concurrently with the filing of binding dispute resolution proceedings but, in such event, mediation shall proceed in advance of binding dispute resolution proceedings, which shall be stayed pending mediation for a period of 60 days from the date of filing, unless stayed for a longer period by agreement of the parties or court order. If an arbitration is stayed pursuant to this Section 15.3.2, the parties may nonetheless proceed to the selection of the arbitrator(s) and agree upon a schedule for later proceedings.~~

~~**§ 15.3.3** The parties shall share the mediator's fee and any filing fees equally. The mediation shall be held in the place where the Project is located, unless another location is mutually agreed upon. Agreements reached in mediation shall be enforceable as settlement agreements in any court having jurisdiction thereof.~~

AIA Document A201™ – 2007. Copyright © 1911, 1915, 1918, 1925, 1937, 1951, 1958, 1961, 1963, 1966, 1970, 1976, 1987, 1997 and 2007 by The American Institute of Architects. **All rights reserved. WARNING: This AIA® Document is protected by U.S. Copyright Law and International Treaties. Unauthorized reproduction or distribution of this AIA® Document, or any portion of it, may result in severe civil and criminal penalties, and will be prosecuted to the maximum extent possible under the law.** This draft was produced by AIA software at 12:33:47 on 05/14/2009 under Order No.1000392252_1 which expires on 4/23/2010, and is not for resale.
User Notes: BRIDGE A201 Non-Homeownership (6-18-09) (6) (1111997498)

§ 15.4 ARBITRATION

§ 15.4.1 ~~If t~~The parties have selected arbitration as the method for binding dispute resolution in the Agreement., ~~any~~ Any Claim ~~subject to, but~~ not resolved by~~, mediation~~ the parties shall be subject to arbitration which, unless the parties mutually agree otherwise, shall be administered by Arbitration Rules and Procedures of JAMS (the "JAMS Rules") currently in effect.~~the American Arbitration Association in accordance with its Construction Industry Arbitration Rules in effect on the date of the Agreement. A demand for arbitration shall be made in writing, delivered to the other party to the Contract, and filed with the person or entity administering the arbitration. The party filing a notice of demand for arbitration must assert in the demand all Claims then known to that party on which arbitration is permitted to be demanded.~~

§ 15.4.1.1 A demand for arbitration shall be made within a reasonable time after the claim has arisen,~~no earlier than concurrently with the filing of a request for mediation,~~ but in no event shall it be made after the date when the institution of legal or equitable proceedings based on the Claim would be barred by the applicable statute of limitations. For statute of limitations purposes, receipt of a written demand for arbitration by the person or entity administering the arbitration shall constitute the institution of legal or equitable proceedings based on the Claim.

§ 15.4.2 The foregoing agreement to arbitrate and other agreements to arbitrate with an additional person or entity duly consented to by parties to the Agreement shall be specifically enforceable under applicable law in any court having jurisdiction thereof. This consent to arbitrate shall not apply (1) when a person or entity necessary or beneficial to the full resolution of the claim cannot be joined in or bound by the arbitration proceeding; (2) if any change in the Contract Time or change in the date set forth for Substantial Completion could result from the arbitration; or (3) if the amount due in the controversy exceeds fifty thousand dollars ($50,000). ~~The award rendered by the arbitrator or arbitrators shall be final, and judgment may be entered upon it in accordance with applicable law in any court having jurisdiction thereof.~~ Such claims not subject to arbitration shall be resolved by a court of competent jurisdiction.

§ 15.4.3 Judgment on Final Award. The arbitrator or arbitrators shall make an award in writing that is consistent with the terms of this Agreement and the laws of the State of California and that includes findings of fact and a reasoned decision. The award rendered by the arbitrator or arbitrators shall be final, and judgment may be entered upon it in accordance with applicable law in any court having jurisdiction thereof. The foregoing agreement to arbitrate and other agreements to arbitrate with an additional person or entity duly consented to by parties to the Agreement shall be specifically enforceable under applicable law in any court having jurisdiction thereof.

§ 15.4.4 CONSOLIDATION OR JOINDER

§ 15.4.4.1 Either party, at its sole discretion, may consolidate an arbitration conducted under this Agreement with any other arbitration to which it is a party provided that (1) the arbitration agreement governing the other arbitration permits consolidation, (2) the arbitrations to be consolidated substantially involve common questions of law or fact, ~~and~~ (3) the arbitrations employ materially similar procedural rules and methods for selecting arbitrator(s), and (4) such consolidation is consistent with the limitation set forth in Section 15.4.2.

§ 15.4.4.2 Either party, at its sole discretion, may include by joinder persons or entities substantially involved in a common question of law or fact whose presence is required if complete relief is to be accorded in arbitration, provided that the party sought to be joined consents in writing to such joinder. Consent to arbitration involving an additional person or entity shall not constitute consent to arbitration of any claim, dispute or other matter in question not described in the written consent.

§ 15.4.4.3 The Owner and Contractor grant to any person or entity made a party to an arbitration conducted under this Section 15.4, whether by joinder or consolidation, the same rights of joinder and consolidation as the Owner and Contractor under this Agreement.

AIA Document A201™ – 2007. Copyright © 1911, 1915, 1918, 1925, 1937, 1951, 1958, 1961, 1963, 1966, 1970, 1976, 1987, 1997 and 2007 by The American Institute of Architects. **All rights reserved. WARNING: This AIA® Document is protected by U.S. Copyright Law and International Treaties. Unauthorized reproduction or distribution of this AIA® Document, or any portion of it, may result in severe civil and criminal penalties, and will be prosecuted to the maximum extent possible under the law.** This draft was produced by AIA software at 12:33:47 on 05/14/2009 under Order No.1000392252_1 which expires on 4/23/2010, and is not for resale.
User Notes: BRIDGE A201 Non-Homeownership (6-18-09) (6) (1111997498)

EXHIBIT R

PLANS

Please see pages 4-5 of the RFP

SAN FRANCISCO BAY AREA RAPID TRANSIT DISTRICT

BART

MACARTHUR BART PLAZA
CONTRACT DRAWINGS

CONTRACT NO. 17AJ-120

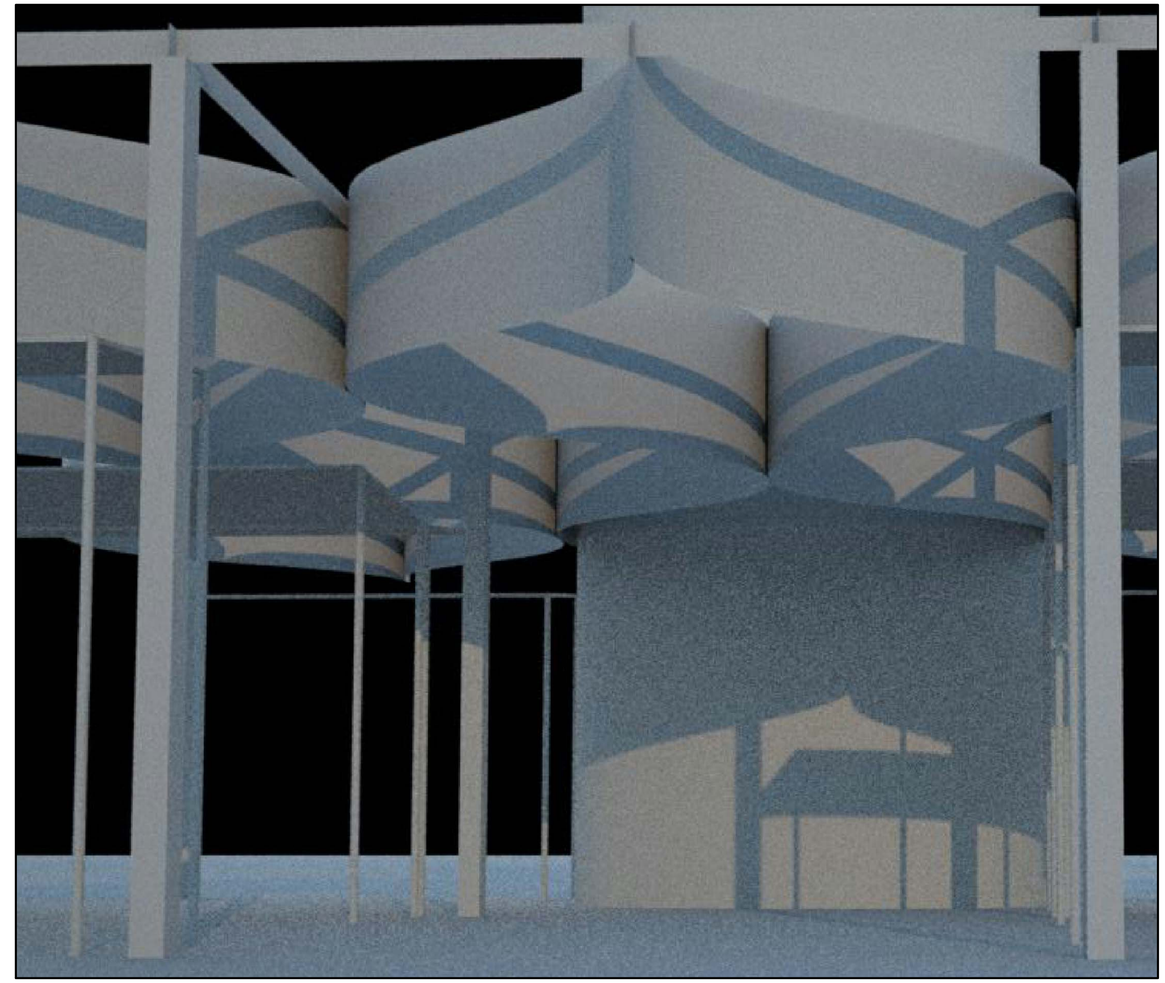

JANUARY 13, 2016

VOLUME 1 OF 1

CIVIL
STRUCTURAL
ARCHITECTURAL
ELECTRICAL

DESIGN TEAM

PGADESIGN, INC.: **PRIME**, LANDSCAPE ARCHITECTS	510.550.8851
SMITH ENGINEERING, INC.: STRUCTURAL ENGINEERS	510.444.0494
WHM INC.: ELECTRICAL ENGINEERS	925.376.2902
SANDIS: CIVIL ENGINEERS	510.590.3408
HOOD DESIGN: URBAN DESIGNERS	

DEVELOPER:

MACARTHUR TRANSIT COMMUNITY PARTNERS, LLC

ADD ALTERNATES

Add Alternate 1: Painting Underside of Freeway Structure and Piers as shown on sheet A001.

Add Alternate 2: Install new conduit to all lights as shown on sheet E102A.

Add Alternate 3: Install bench type I as shown on sheet C007.

hirsch Jan 11, 2016 - 4:38pm F:\MacPlaza OAK\DWG\Current Set-MacPlaza\COVER.dwg

MACARTHUR BART
PLAZA ADDITIONS

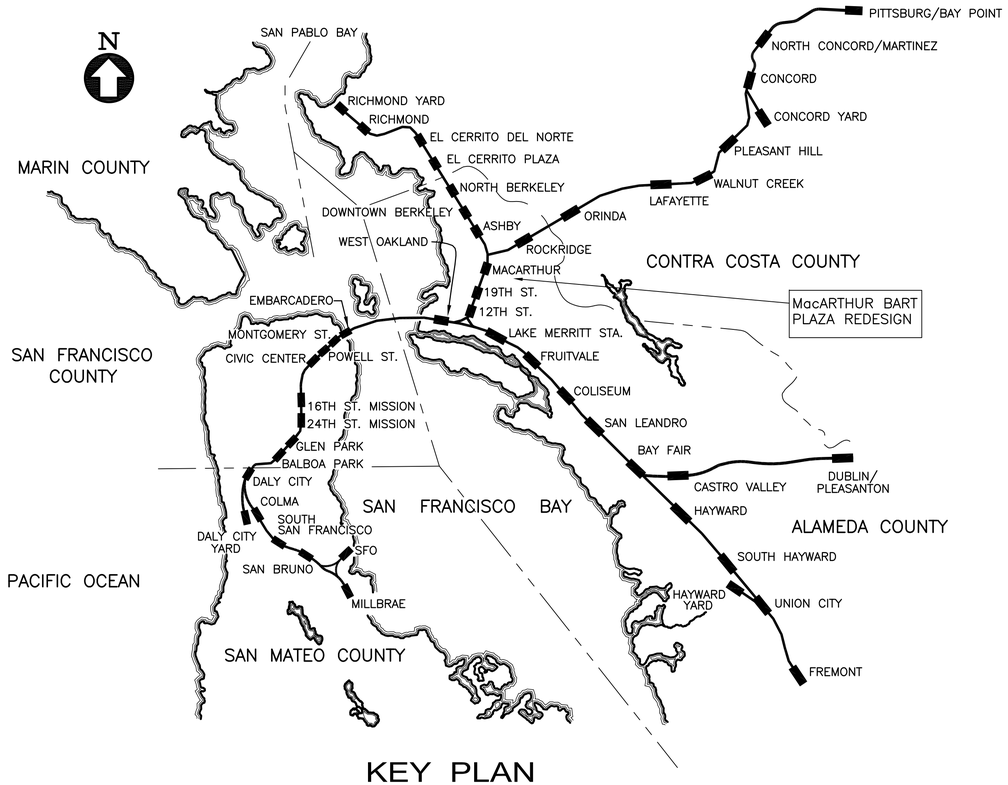

KEY PLAN

2 1 0 2 4 6 8 10 MILES
GRAPHIC SCALE

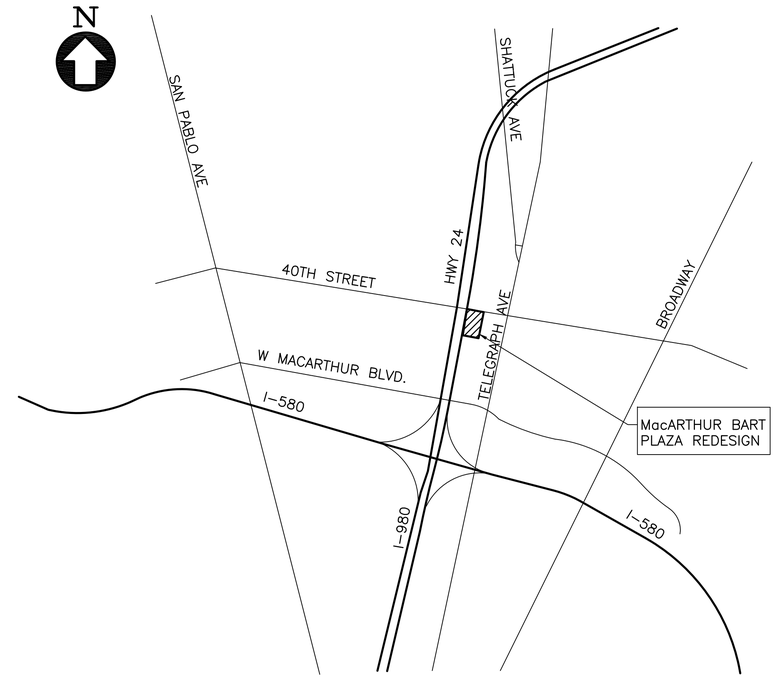

LOCATION MAP

NO SCALE

REV.	DATE	BY	SUB	APP.	DESCRIPTION
1	20150811	JH	CK	CK	REISSUED FOR BID
P	20130628				ISSUED FOR BID

DESIGNED: J. STOCKHAM
DRAWN: C. ANGERS
CHECKED: Y. CHEN
APPROVED: C. KENT
DATE: 20130628

LICENSED LANDSCAPE ARCHITECT
CHRISTOPHER W. KENT
Signature
MAY 31, 2014
Renewal Date
JUNE 28, 2013
Date
STATE OF CALIFORNIA

SAN FRANCISCO BAY AREA RAPID TRANSIT DISTRICT

PGADESIGN, INC.

SUBMITTED _____ APPROVED _____

MACARTHUR BART PLAZA ADDITIONS

PROJECT LOCATION MAP

CADD FILENAME: G001.DWG
SIZE: D
SCALE: AS NOTED
CONTRACT NO.: **17AJ-120**
REV.: **P**
CONTRACT SHEET NO.: **G001**
PAGE NO.:

jhirsch Sep 10, 2015 - 6:54am F:\MacPlaza.OAK\DWG\Current Set-MacPlaza\G001.dwg

INDEX OF DRAWINGS

GENERAL DRAWINGS

PAGE NO.	CONTRACT SHEET NO.	REV NO.	TITLE
000			COVER SHEET
001	G001	A	PROJECT LOCATION MAP
002	G002	A	INDEX OF DRAWINGS

CIVIL DRAWINGS

PAGE NO.	CONTRACT SHEET NO.	REV NO.	TITLE
003	CS50	00	GENERAL CIVIL NOTES, ABBREVIATIONS AND SYMBOLS SHEET 1 OF 2
004	CS51	00	GENERAL CIVIL NOTES, ABBREVIATIONS AND SYMBOLS SHEET 2 OF 2
005	C001	P	EXISTING CONDITIONS PLAN
006	C002	P	CONSTRUCTION PHASING AND ACCESS PLAN
007	C003	P	DEMOLITION PLAN
008	C004	P	LAYOUT PLAN
009	C005	P	PAVING PLAN
010	C006	P	GRADING AND DRAINAGE PLAN
011	C007	P	SITE DETAILS
012	C008	P	SITE DETAILS
013	CS06	00	SIDEWALK DETAILS
014	CS13	00	DRAINAGE DETAILS DITCHES AND UNDERDRAINS
015	CS15	00	DRAINAGE DETAILS STORM SEWER MANHOLES

STRUCTURAL DRAWINGS

PAGE NO.	CONTRACT SHEET NO.	REV NO.	TITLE
016	SS01	00	BIKE STATION ROOF FRAMING PLAN AND DETAIL
017	SS02	00	BIKE STATION CONNECTION AND IMAGES
018	SS03	P	BIKE STATION PANEL TO CLIP CONNECTION
019	SS04	P	BIKE STATION PARTIAL ELEVATION

ARCHITECTURAL DRAWINGS

PAGE NO.	CONTRACT SHEET NO.	REV NO.	TITLE
020	AS00	00	ABBREVIATIONS AND SYMBOLS
021	A001	P	REFLECTED CEILING PLAN
022	A002	P	LAYOUT DETAILS
023	A003	P	GUTTERS
024	A004	P	SIGNAGE PLAN
025	A005	P	SIGNAGE DETAILS

ELECTRICAL DRAWINGS

PAGE NO.	CONTRACT SHEET NO.	REV NO.	TITLE
026	E001	P	SYMBOLS, SCHEDULES AND DETAILS
027	E002	P	ELECTRICAL DETAILS AND DIAGRAMS
028	E003	P	UNIFIED OPTICAL NETWORK FIELD CONCENTRATOR SYSTEM TYPICAL POWER AND GROUNDING DIAGRAM
029	E008	P	UNIFIED OPTICAL NETWORK FIELD CONCENTRATOR SYSTEM TYPICAL TYPE 1 AND 2 SYSTEM WIRING INTERFACE
030	E009	P	UNIFIED OPTICAL NETWORK FIELD CONCENTRATOR SYSTEM TYPICAL TYPE 1 WIRING DIAGRAM
031	E010	P	UNIFIED OPTICAL NETWORK FIELD CONCENTRATOR SYSTEM TYPICAL TYPE 2 WIRING DIAGRAM
032	E011	P	UNIFIED OPTICAL NETWORK FIELD CONCENTRATOR SYSTEM TYPICAL CAMERA MOUNTING DETAILS
033	E013	P	BIKE LOCKER ACCESS PANEL REQUIREMENTS
034	E101	P	ELECTRICAL SITE DEMOLITION PLAN
035	E102	P	ELECTRICAL SITE LIGHTING AND POWER PLAN BASE BID
036	E102A	P	ELECTRICAL SITE LIGHTING AND POWER PLAN BID ALTERNATE 7
037	E103	P	ELECTRICAL SITE CCTV AND TELEPHONE SITE PLAN
038	ES01	00	BFS STANDARD DRAWING
039	ES02	00	BFS STANDARD DRAWING
040	ES23	00	BFS STANDARD DRAWING
041	ES41	00	BFS STANDARD DRAWING
042	ES77	00	BFS STANDARD DRAWING
043	BE102	C	ELECTRICAL SITE LIGHTING AND POWER PLAN (FOR REFERENCE ONLY)

REV.	DATE	BY	SUB	APP.	DESCRIPTION
2	20151211	JH	CK	CK	REISSUED FOR BID
1	20150811	JH	CK	CK	REISSUED FOR BID
P	20130628				ISSUED FOR BID

DESIGNED: J. STOCKHAM
DRAWN: C. ANGERS
CHECKED: Y. CHEN
APPROVED: C. KENT
DATE: 20130628

LICENSED LANDSCAPE ARCHITECT CHRISTOPHER M. KENT STATE OF CALIFORNIA MAY 31, 2014 Renewal Date JUNE 30, 2013 Date

SAN FRANCISCO BAY AREA RAPID TRANSIT DISTRICT

PGADESIGN, INC.

SUBMITTED _____ APPROVED _____

MACARTHUR BART PLAZA ADDITIONS

INDEX OF DRAWINGS

CADD FILENAME G002.DWG
SIZE: D SCALE NONE
CONTRACT NO. **17AJ-120** REV. **P**
CONTRACT SHEET NO. **G002** PAGE NO.

Jan 08, 2016 – 9:08am F:\MacPlaza.OAK\DWG\Current Set-MacPlaza\G002.dwg
Hirsch

ABBREVIATIONS

HORIZONTAL ALIGNMENT

BC	BEGIN CURVE
CC	CENTER OF CIRCULAR CURVE
CS	POINT OF CHANGE FROM CIRCULAR CURVE TO SPIRAL
E	SUPERELEVATION IN INCHES
EC	END CURVE
k_1	TANGENT DISTANCE OF SHIFTED PC REFERRED TO THE TS
k_2	TANGENT DISTANCE OF SHIFTED PT REFERRED TO THE ST
Lc	TOTAL LENGTH OF CIRCULAR CURVE FROM PC TO PT OR SC TO CS
Lsc	LENGTH OF COMPOUND SPIRAL FROM CS TO SC
Ls_1	LENGTH OF SPIRAL FROM TS TO SC
Ls_2	LENGTH OF SPIRAL FROM CS TO ST
p_1	OFFSET FROM INITIAL TANGENT TO PC OF THE SHIFTED CIRCLE OF SPIRALIZED CURVE
p_2	OFFSET FROM INITIAL TANGENT TO PT OF THE SHIFTED CIRCLE OF SPIRALIZED CURVE
pc	OFFSET BETWEEN CIRCLES AT POINT OF COMPOUND CURVATURE
PC	POINT OF CURVATURE/POINT OF CHANGE FROM TANGENT TO CIRCULAR CURVE
PCC	POINT OF COMPOUND CURVATURE
PI	POINT OF INTERSECTION OF TWO TANGENTS
POC	POINT ON CIRCULAR CURVE
POS	POINT ON SPIRAL
POT	POINT ON TANGENT
PRC	POINT OF REVERSE CURVATURE
PT	POINT OF TANGENCY/POINT OF CHANGE FROM CIRCULAR CURVE TO TANGENT
R	RADIUS
SC	POINT OF CHANGE FROM SPIRAL TO CIRCULAR CURVE
SS	POINT OF CHANGE FROM ONE SPIRAL TO ANOTHER
ST	POINT OF CHANGE FROM SPIRAL TO TANGENT
SPO	POINT OF ORIGIN OF COMPOUND SPIRAL
TAN	TANGENT
Ts_1	TANGENT DISTANCE FROM TS TO PI
Ts_2	TANGENT DISTANCE FROM ST TO PI
TS	POINT OF CHANGE FROM TANGENT TO SPIRAL
U	UNBALANCED SUPERELEVATION IN INCHES
Xs_1	TANGENT DISTANCE AT THE SC
Xs_2	TANGENT DISTANCE AT THE CS
Ys_1	TANGENT OFFSET AT THE SC
Ys_2	TANGENT OFFSET AT THE CS
Δ	TOTAL CENTRAL ANGLE OF THE SPIRALIZED CURVE
Δc	CENTRAL ANGLE OF CIRCULAR CURVE (Lc) FROM SC TO CS
Δc_1	CENTRAL ANGLE OF FIRST CIRCULAR CURVE OF COMPOUND CURVATURE
Δc_2	CENTRAL ANGLE OF SECOND CIRCULAR CURVE OF COMPOUND CURVATURE
θs_1	CENTRAL ANGLE OF SPIRAL LENGTH Ls_1 OR SPIRAL ANGLE OF FIRST SPIRAL IN SPIRALIZED CURVE
θs_2	CENTRAL ANGLE OF SPIRAL LENGTH Ls_2 OR SPIRAL ANGLE OF SECOND SPIRAL IN SPIRALIZED CURVE
θs_3	CENTRAL ANGLE OF COMPOUND SPIRAL OR COMPOUND SPIRAL ANGLE FROM CS TO SC

VERTICAL ALIGNMENT

BVC	BEGIN VERTICAL CURVE
EVC	END VERTICAL CURVE
PCVC	POINT OF COMPOUND VERTICAL CURVE
PIVC	POINT OF INTERSECTION OF TWO PROFILE TANGENTS
POVC	POINT ON VERTICAL CURVE
POVT	POINT ON VERTICAL TANGENT
PRVC	POINT OF REVERSE VERTICAL CURVE
VC	VERTICAL CURVE

GENERAL

AB	AGGREGATE BASE
ABAND	ABANDON
ABM	AIR–BLOWN MORTAR
ABT	ANCHOR BOLT
ABUT	ABUTMENT
AC	ASPHALT CONCRETE
ACD	ACCESS DOOR
ACI	AMERICAN CONCRETE INSTITUTE
ACOUS	ACOUSTICAL
ACP	ASBESTOS CEMENT PIPE
ACR	ACRE
AD	AREA DRAIN
ADJ	ADJUSTABLE
AHD	AHEAD
AL	ALUMINUM
ALT	ALTERNATE
ANCH	ANCHOR
ANSI	AMERICAN NATIONAL STANDARDS INSTITUTE
AP	ACCESS PANEL
APPROX	APPROXIMATE
ARCH	ARCHITECTURAL
AS	AGGREGATE SUBBASE
ASPH	ASPHALT
ASTM	AMERICAN SOCIETY FOR TESTING AND MATERIALS
AVE	AVENUE
BART	BAY AREA RAPID TRANSIT DISTRICT
BB	BEGINNING OF BRIDGE
BC	BOTTOM OF CURB
BCR	BEGIN CURB RETURN
BD	BOARD
BEG	BEGIN
BITUM	BITUMINOUS
BK	BACK
BKF	BACKFILL
BLDG	BUILDING
BLVD	BOULEVARD
BM	BENCHMARK
BR	BRIDGE
BS	BOTTOM OF SLOPE
BW	BARBED WIRE
C	COVER
C–C	CENTER TO CENTER
CALTRANS	CALIFORNIA DEPARTMENT OF TRANSPORTATION
CAP	CORRUGATED ALUMINUM PIPE
CB	CATCH BASIN
CEM	CEMENT
CER	CERAMIC
CF	CUBIC FOOT
CFM	CUBIC FEET PER MINUTE
CG	CENTER OF GRAVITY
CI	CAST IRON
CIP	CAST IRON PIPE
CJ	CONSTRUCTION JOINT
℄	CENTERLINE
CL	CHAIN LINK
CL&C	CEMENT LINED AND COATED
CLF	CHAIN LINK FENCE
CLG	CEILING
CLKG	CALKING
CLR	CLEAR, CLEARANCE
CNTR	COUNTER
CO	CLEANOUT
COL	COLUMN
CONC	CONCRETE
CONN	CONNECT
CONST	CONSTRUCT
CONT	CONTINUOUS
CONTN	CONSTRUCTION
COORD	COORDINATE
CORR	CORRIDOR
CP	CONCRETE PIPE
CSP	CORRUGATED STEEL PIPE
CTR	CENTER
CTSK	COUNTERSUNK
CTY	COUNTY
CULV	CULVERT
CUR	CURVE
CY	CUBIC YARD
D	DEPTH
DBL	DOUBLE
DD	DOWN DRAIN
DEL	DELINEATORS
DET	DETAIL
DF	DIRECT FIXATION
DGAC	DENSE GRADED ASPHALT CONCRETE
DI	DRAINAGE INLET
DIA	DIAMETER
DIAG	DIAGONAL
DIM	DIMENSION
DIP	DUCTILE IRON PIPE
DIR	DIRECTION
DN	DOWN
DR	DOOR
DRV	DRIVE
DRWY	DRIVEWAY
DS	DOWNSPOUT
DTR	DETOUR
DWG	DRAWING
E	EAST
(E)	EXISTING
EA	EACH
EB	EASTBOUND
ECR	END CURB RETURN
EE	EACH END
EJ	EXPANSION JOINT
EL	ELEVATION
EMB	EMBANKMENT
EOB	END OF BRIDGE
EP	EDGE OF PAVEMENT
EQ	EQUAL
EQPT	EQUIPMENT
ES	EDGE OF SHOULDER
ESMT	EASEMENT
ETW	EDGE OF TRAVELED WAY
EW	EACH WAY
EWL	END WALL
EXC	EXCAVATION
EXP JT	EXPANSION JOINT
EXPO	EXPOSED
EXT	EXTERIOR
FB	FLATBAR
FCO	FLOOR CLEAN OUT
FD	FLOOR DRAIN
FDN	FOUNDATION
FF	FILTER FABRIC
FG	FINISHED GRADE
FL	FLOW LINE
FLR	FLOOR
FR	FRAME
FT	FOOT, FEET
FTG	FOOTING
FWY	FREEWAY
GA	GAGE
GALV	GALVANIZED
GB	GYPSUM BOARD
GCL	GRADING CONTROL LINE
GD	GRADE
GDR	GUARD RAILING
GIP	GALVANIZED IRON PIPE
GL	GLASS
GM	GUIDE MARKER
GND	GROUND
GP	GRADING PLANE
GR	GRATE
GRL	GRILLE
GSP	GALVANIZED STEEL PIPE
H	HEIGHT
HDWE	HARDWARE
HEX	HEXAGON, HEXAGONAL
HI	HIGH
HM	HOLLOW METAL
HOR	HORIZONTAL
HP	HIGH POINT
HR	HANDRAIL
HS	HIGH STRENGTH
HT	HEIGHT
HW	HEADWALL
HWY	HIGHWAY
ID	INSIDE DIAMETER
IE	INVERT ELEVATION
IN	INCH, INCHES
INFO	INFORMATION
INSUL	INSULATION
INT	INTERIOR
INV	INVERT
INV EL	INVERT ELEVATION
IR	INSIDE RADIUS
IRR	IRRIGATION
JT	JOINT
L	LENGTH
LA	LANDSCAPE ARCHITECT
LB	POUND
LC	LANDSCAPE CONTRACTOR
LF	LINEAR FOOT
LG	LONG
LOC	LOCATION
LOL	LAYOUT LINE
LP	LOW POINT
LR	LONG RADIUS
LT	LEFT
LWP	LOW WORKING POINT
MAX	MAXIMUM
MED	MEDIAN
MEM	MEMBRANE
MET	METAL
MFR	MANUFACTURER
MH	MANHOLE
MIN	MINIMUM
MISC	MISCELLANEOUS
MO	MASONRY OPENING
MOD	MODIFY, MODIFIED
MON	MONUMENT
MPH	MILES PER HOUR
MTD	MOUNTED
MTL	MATERIAL
N	NORTH
(N)	NEW
N/A	NOT APPLICABLE
NB	NORTHBOUND
NIC	NOT IN CONTRACT
NO	NUMBER
NOM	NOMINAL
NTS	NOT TO SCALE
OC	ON CENTER
OD	OUTSIDE DIAMETER
OH	OVERHEAD
OPNG	OPENING
OPP	OPPOSITE
OPP HND	OPPOSITE HAND
OVC	OVERCROSSING
P/L	PROPERTY LINE
PB	PULLBOX
PC	PRECAST CONCRETE
PCC	PORTLAND CEMENT CONCRETE
PED	PEDESTRIAN
PERF	PERFORATED
PERM MTL	PERMEABLE MATERIAL
PG	PROFILE GRADE
PGL	PROFILE GRADE LINE
PH	PHASE
PLAS	PLASTER
PLC	PLASTIC COATED
PLYWD	PLYWOOD
PM	POST MILE
PPL	PREFORMED PERMEABLE LINER
PPP	PERFORATED PLASTIC PIPE
PR	PAIR
PS	POINT OF SWITCH, POSITION SWITCH
PSI	POUNDS PER SQUARE INCH
PSIG	POUNDS PER SQUARE INCH GAUGE
PT	POINT
PVC	POLYVINYL CHLORIDE
PVMT	PAVEMENT
R	RADIUS
R/W	RIGHT–OF–WAY
RC	REINFORCED CONCRETE
RCP	REINFORCED CONCRETE PIPE
RD	ROAD
RDN	ROOF DRAIN
RDWY	ROADWAY
REF	REFERENCE
REINF	REINFORCED, REINFORCING
REL	RELOCATE
REQD	REQUIRED
REV	REVISION
RP	REFERENCE POINT
RR	RAILROAD
RST	RESILIENT TILE
RT	RIGHT
RTE	ROUTE
RW	RETAINING WALL

REV.	DATE	BY	CHKD.	APP.	DESCRIPTION
00	08/04				DRAWN PER BECO EM001151

THIS DRAWING IS INTENDED SOLELY FOR BART USE IN ORDER TO DESIGN, CONSTRUCT, ALTER, OR MAINTAIN ITS FACILITIES. BART DOES NOT RECOMMEND OR WARRANT USE OF THE DRAWING FOR ANY OTHER PURPOSE. USE OF THE DRAWING BEYOND THE INTENDED PURPOSE WILL BE AT USER'S OWN RISK.

REGISTERED PROFESSIONAL ENGINEER CARSTEN Y. IWADATE No. C40566 Exp. 03-31-07 CIVIL STATE OF CALIFORNIA

BART

DESIGNED: BATC	DATE: 09/91
DRAWN:	
CHECKED:	
APPROVED:	

BART FACILITIES STANDARDS
CIVIL

GENERAL CIVIL NOTES,
ABBREVIATIONS AND SYMBOLS
SHEET 1 OF 2

REF. NO. CS50
SIZE: D SCALE NONE
CONTRACT REV. 00
SHEET NO. CS50 PG. NO.

ABBREVIATIONS

S	SOUTH
SAN	SANITARY
SB	SOUTHBOUND
SC	SOLID CORE
SCH	SCHEDULE
SD	STORM DRAIN
SDMH	STORM DRAIN MANHOLE
SEC	SECTION
SF	SQUARE FEET
SG	SUBGRADE
SHLDR	SHOULDER
SHT	SHEET
SIM	SIMILAR
SP	STEEL PIPE
SPA	SPACES, SPACING
SPEC	SPECIFICATION
SQ	SQUARE
SS	STAINLESS STEEL
SSMH	SANITARY SEWER MANHOLE
ST	STREET
STA	ALIGNMENT STATION
STD	STANDARD
STIFF	STIFFENER
STL	STEEL
STOR	STORAGE
STR	STRUCTURAL
SUSP	SUSPENDED
SVC	SERVICE
SW	SIDEWALK
SWL	SOUND WALL
SY	SQUARE YARD
SYM	SYMMETRICAL
T	TOP
T/R	TOP OF RAIL
T/W	TOP OF WALL
T&B	TOP & BOTTOM
TB	TEST BORING
TBD	TO BE DETERMINED
TC	TOP OF CURB
TC/C	TRAIN CONTROL AND COMMUNICATIONS
TD	TRENCH DRAIN
TEL	TELEPHONE
TEMP	TEMPORARY
TG	TOP OF GRATE (ELEVATION)
THK	THICK
TO	TURNOUT
TOC	TOP OF CONCRETE
TOL	TOLERANCE
TOS	TOP OF STEEL
TP	TOP OF PAVEMENT
TPR	TRACTION POWER
TR	TREAD
TRANS	TRANSITION
TRK	TRACK
TS	TUBE SECTION
TSL	TRAFFIC SIGNAL
TW	TRAVELED WAY
TYP	TYPICAL
UB	UTILITY BOX
UC	UNDERCUT
UCG	UNDERCROSSING
UD	UNDERDRAIN
UG	UNDERGROUND
UNF	UNFINISHED
UNO	UNLESS NOTED OTHERWISE
UP	UNION PACIFIC RAILROAD CO.
UWP	UPPER WORKING POINT
V	VENT
VAR	VARIES
VERT	VERTICAL
W	WEST
W/	WITH
W/O	WITHOUT
WB	WESTBOUND
WD	WOOD
WI	WIDTH
WL	WATER LINE
WP	WORK POINT
WPF	WATERPROOF, WATERPROOFING
WT	WEIGHT
WWF	WELDED WIRE FABRIC
XING	CROSSING
Z	ZONE

GENERAL NOTES

1. ALL ELEVATIONS ARE BASED ON NATIONAL GEODETIC VERTICAL DATUM (NGVD) 1929.
2. PLANE COORDINATES, DISTANCES, AND BEARINGS SHOWN ARE BASED ON CALIFORNIA STATE PLANE COORDINATE SYSTEM, ZONE III, NORTH AMERICAN DATUM 1983 (NAD '83). GRID DISTANCE FACTORS TO OBTAIN GROUND LEVEL DISTANCES ARE SHOWN ON OTHER CONTRACT DRAWINGS.
3. TOPOGRAPHIC BASE MAPPING WAS PREPARED BY DIGITAL PHOTOGRAMMETRIC METHODS. FOR DATE OF AERIAL PHOTOGRAPHY, SEE OTHER CONTRACT DRAWINGS.
4. ALL HORIZONTAL AND VERTICAL DISTANCES ARE IN FEET AND/OR DECIMALS OF FOOT EXCEPT AS NOTED OTHERWISE ON PLANS.
5. THE PROFILE IS ALWAYS CARRIED ON THE TOP OF LOWER RAIL THROUGH HORIZONTAL CURVES AND SPIRALS FOR THE DESIGNATED TRACK AND ALSO FOR TRACKS PARALLEL TO THE DESIGNATED TRACK. THE LENGTHS OF LINES ARE BASED ON CENTER OF TRACK ALIGNMENT.
6. FOR GENERAL UTILITY NOTES, ABBREVIATIONS AND SYMBOLS SEE:
   DRAWING US50 FOR PITTSBURG–ANTIOCH EXTENSION
   DRAWING US51 FOR DUBLIN–PLEASANTON EXTENSION
   DRAWING US52 FOR COLMA STATION EXTENSION
   DRAWING US53 FOR WARM SPRINGS EXTENSION
7. SEE DRAWING CS50 FOR ABBREVIATIONS.

SYMBOLS

EXISTING

DIRT ROAD
GUTTER
FENCE
PROPERTY/ RIGHT OF WAY
EASEMENT LINE
CURBED ROAD EDGE
PAVED ROAD EDGE
OFF–ROAD CURB
ASPHALT, PARKING
CONCRETE SLAB
SIDEWALK, DRIVEWAY
RETAINING WALL
CULVERT
GUARDRAIL/ MEDIAN BARRIER
MH — MANHOLE
POST
FLAGPOLE
SIGN
LARGE SIGN
UTILITY BOX
ANCHOR W/GUY WIRE
CB — CATCH BASIN
RAILROAD
WATER LINE
CONCRETE DITCH
TREE DRIP LINE/ SHRUBS
TREE
INDEX CONTOUR
DASHED INDEX CONT.
INTERMEDIATE CONTOUR
DEPRESSION CONTOUR

NEW

CURB
CURB AND GUTTER
EDGE OF PAVEMENT
RETAINING WALL
DIRT ROAD, DRIVE, OR WALK
CENTERLINE
TRACK CENTERLINE
CHAIN LINK FENCE
CHAIN LINK FENCE ON TOP OF RETAINING WALL OR TRAFFIC BARRIER
TOP OF CUT
TOE OF CUT
TOP OF FILL
TOE OF FILL
P–XXXX — R/W PARCEL NUMBER
LOT LINE
BOUNDARY LINE, SECTION LINE
P/L — PROPERTY LINE
R/W — RIGHT OF WAY LINE
ESMT — EASEMENT LINE
HIDDEN LINE
MATCH LINE
DITCH SHOWING DIRECTION OF FLOW
DIRECTION OF RUNOFF/FLOW
8" SD — STORM DRAIN
6" UD — UNDERDRAIN
95 — CURVE NUMBER
294.30 — ELEVATION OF FINISHED GRADE
MON 105 — PRIMARY SURVEY CONTROL POINT
PI/PIVC
CONTROL POINT ON HORIZONTAL OR VERTICAL CURVE

SDMH — STORM DRAIN MANHOLE
CO — CLEANOUT
DI/CB — STORM DRAIN INLET/ CATCH BASIN
STATION EQUATION

&	AND
∠	ANGLE
@	AT
#	BAR SIZE
⊕	CONTROL POINT
ø	DIAMETER
=	EQUAL TO
%	PERCENT
	WORK POINT
L, ∠	ANGLE SECTION
C OR MC	CHANNEL SECTION
W	WIDE FLANGE SECTION
>	GREATER THAN
<	LESS THAN
≥	GREATER THAN OR EQUAL TO
≤	LESS THAN OR EQUAL TO

1 / CS15 — DETAIL (NUMBER) OR SECTION (LETTER)
CS22 — DRAWING WHERE DETAIL OR SECTION IS CUT
DRAWING WHERE DETAIL OR SECTION IS SHOWN

REV.	DATE	BY	CHKD.	APP.	DESCRIPTION
00	08/04				DRAWN PER BECO EM001151

THIS DRAWING IS INTENDED SOLELY FOR BART USE IN ORDER TO DESIGN, CONSTRUCT, ALTER, OR MAINTAIN ITS FACILITIES. BART DOES NOT RECOMMEND OR WARRANT USE OF THE DRAWING FOR ANY OTHER PURPOSE. USE OF THE DRAWING BEYOND THE INTENDED PURPOSE WILL BE AT USER'S OWN RISK.

REGISTERED PROFESSIONAL ENGINEER — EDSTEN Y. IWAOKA — No. C40366 — Exp. 03-31-97 — CIVIL — STATE OF CALIFORNIA

BART

DESIGNED: BATC	DATE: 09/91
DRAWN:	
CHECKED:	
APPROVED:	

BART FACILITIES STANDARDS
CIVIL

GENERAL CIVIL NOTES, ABBREVIATIONS AND SYMBOLS
SHEET 2 OF 2

REF. NO. CS51
SIZE: D — SCALE: NONE
CONTRACT — REV. 00
SHEET NO. CS51 — PG. NO.

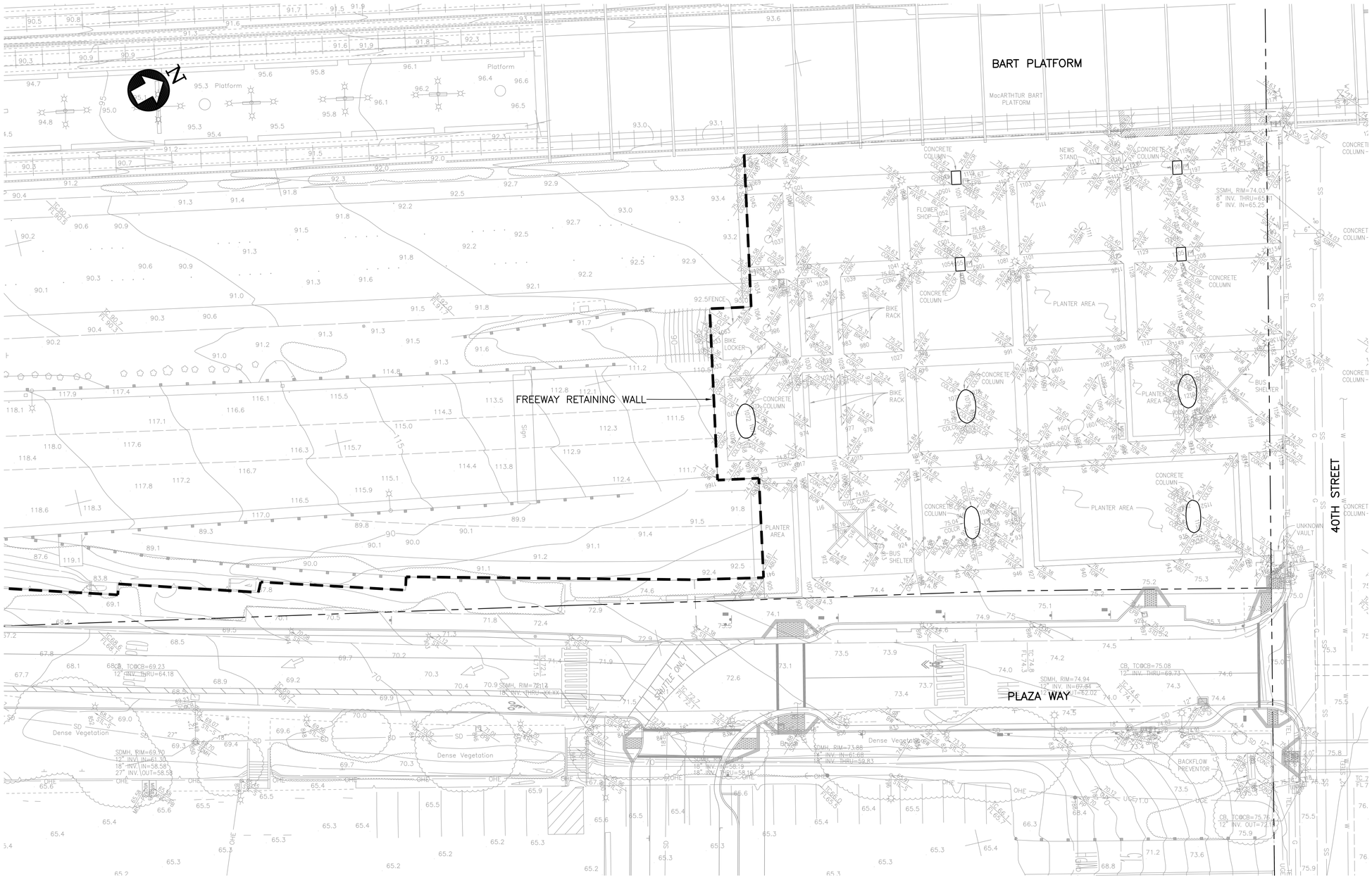

NOTES:

1. FOR LEGEND, ABBREVIATIONS, AND GENERAL NOTES, SEE CONTRACT SHEETS NO. CS50 AND CS51.

LEGEND:

PLAZA COLUMNS

PLAN

SCALE: 1"=20'

20' 0' 20' 40'

GRAPHIC SCALE

REV.	DATE	BY	SUB	APP.	DESCRIPTION
1	20150811	JH	CK	CK	REISSUED FOR BID
P	20130628				ISSUED FOR BID

DESIGNED: J. STOCKHAM
DRAWN: C. ANGERS
CHECKED: C. KENT
APPROVED: C. KENT
DATE: 20130628

LICENSED LANDSCAPE ARCHITECT — CHRISTOPHER W. KENT — Registration Number 2499 — Renewal Date JUNE 28, 2013 — Date MAY 9, 2014 — STATE OF CALIFORNIA

SAN FRANCISCO BAY AREA RAPID TRANSIT DISTRICT

PGAdesign, INC.

GENERAL ENGINEERING CONSULTANT

SUBMITTED _____

APPROVED _____

MACARTHUR BART PLAZA REPLACEMENT

EXISTING CONDITIONS PLAN

CADD FILENAME: C001.DWG
SIZE: D
SCALE: 1"=20'-0"
CONTRACT NO.: 17AJ-120
REV.: P
CONTRACT SHEET NO.: C001
PAGE NO.:

Jan 06, 2016 - 12:59pm F:\MacPlaza OAK\DWG\Current Set-MacPlaza\C001.dwg
hirsch

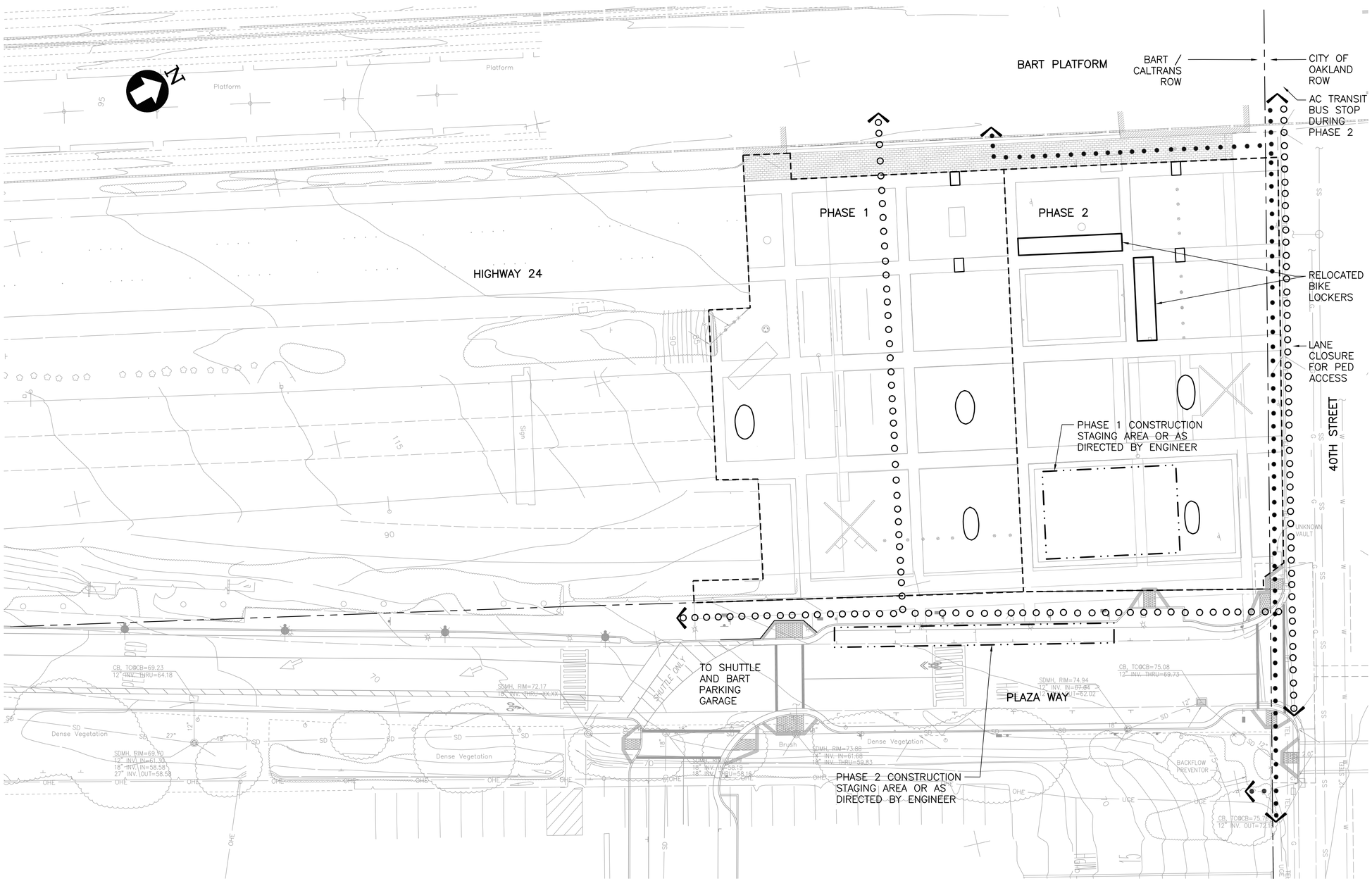

NOTES:

1. SCHEDULE CONSTRUCTION PER THIS EXHIBIT AND BE RESPONSIBLE FOR CONSTRUCTION STAGING, DETOURS AND TRAFFIC CONTROL PER THE REQUIREMENTS OF BART AND IN CONFORMANCE WITH BART STANDARD PLANS AND SPECIFICATIONS.
2. TRAFFIC CONTROL, STAGING AND DETOUR PLANS WILL BE PREPARED IN ACCORDANCE WITH CALTRANS AND MAINTENANCE WORK ZONES. PLANS ARE TO BE APPROVED BY BART PRIOR TO CONSTRUCTION OF EACH PHASE.
3. CONTRACTOR TO OBTAIN ENCROACHMENT PERMITS AND OTHER REQUIREMENTS FROM CALTRANS AND CITY OF OAKLAND PRIOR TO CONSTRUCTION.
4. POST NOTIFICATION 72 HOURS PRIOR TO RELOCATION OF BIKE LOCKERS.

LEGEND:

- - - - - - LIMITS OF WORK (CONSTRUCTION BARRIER)
● ● ● ● ● PEDESTRIAN ACCESS – PHASE 1
○ ○ ○ ○ ○ PEDESTRIAN ACCESS – PHASE 2

PLAN

SCALE: 1"=20'

20' 0' 20' 40'

GRAPHIC SCALE

REV.	DATE	BY	SUB	APP.	DESCRIPTION
1	20150811	JH	CK	CK	REISSUED FOR BID
P	20130628				ISSUED FOR BID

DESIGNED: J. STOCKHAM
DRAWN: C. ANGERS
CHECKED: Y. CHEN
APPROVED: C. KENT
DATE: 20130628

LICENSED LANDSCAPE ARCHITECT — CHRISTOPHER W. KENT — LICENSE NO. 2522 — MAY 31, 2014 — Renewal Date — JUNE 28, 2013 — Date — STATE OF CALIFORNIA

SAN FRANCISCO BAY AREA RAPID TRANSIT DISTRICT

PGADESIGN, INC.

SUBMITTED _____ APPROVED _____

MACARTHUR BART PLAZA REPLACEMENT

CONSTRUCTION PHASING AND ACCESS PLAN

CADD FILENAME: C002.DWG
SIZE: D
SCALE: 1"=20'-0"
CONTRACT NO.: 17AJ-120
REV.: P
CONTRACT SHEET NO.: C002
PAGE NO.:

Jan 06, 2016 – 12:58pm F:\MacPlaza.OAK\DWG\Current Set-MacPlaza\C002.dwg
Hirsch

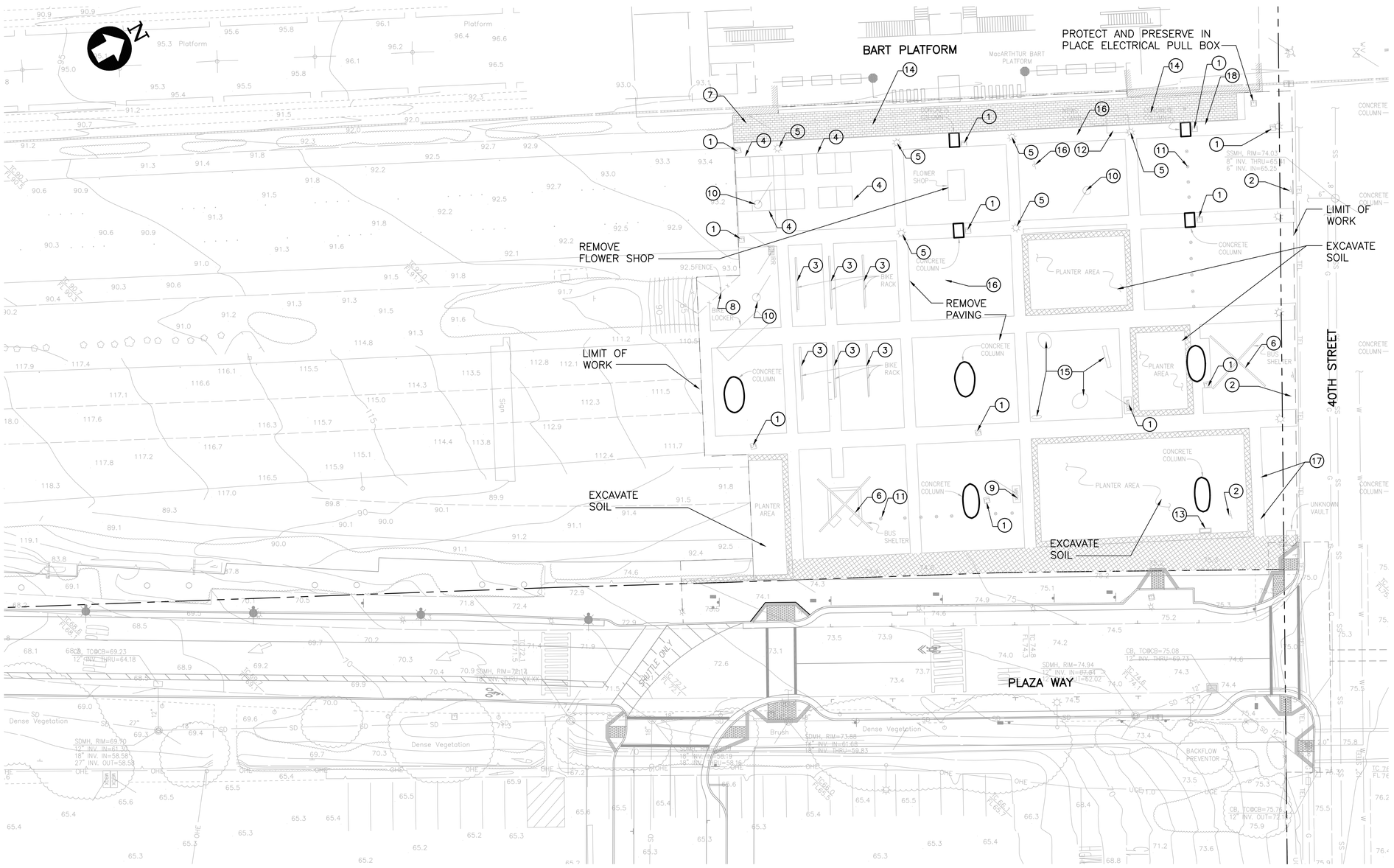

PLAN

SCALE: 1"=20'

NOTES:

1. FOR LEGEND, ABBREVIATIONS, AND GENERAL NOTES, SEE CONTRACT SHEETS NO. CS50 AND CS51.
2. SAWCUT EXISTING PAVEMENT AND/OR CONCRETE TO A NEAT LINE.
3. GIVE SALVAGED ITEMS NOT BEING RELOCATED WILL BE GIVEN TO BART.
4. 'RELOCATED' ITEMS WILL BE RE-INSTALLED ON SITE.
5. REMOVE EXISTING BASE OR SUBGRADE MATERIAL UNDER CONCRETE SHALL BE REMOVED DOWN TO THE LIMITS OF NEW WORK.
6. REMOVE AND SALVAGE TRASH RECEPTACLES

LEGEND:

- REMOVE CONCRETE PLANTER
- PRESERVE BRICK PAVERS
- PRESERVE PLAZA COLUMNS
- (1) RELOCATE ELECTRICAL BOX
- (2) REMOVE AND SALVAGE SIGN
- (3) RELOCATE BICYCLE RACKS
- (4) RELOCATE BICYCLE LOCKERS
- (5) FOR LIGHT DEMOLITION SEE SHEET E101
- (6) REMOVE WIND SCREEN AND BENCHES
- (7) CUT AND CAP IRRIGATION LINE AT BUILDING
- (8) REMOVE FENCING
- (9) HAVE USPS REMOVE MAILBOX, CALL 510.622.7450, KIM JOHNSON
- (10) PROTECT SANITARY SEWER MAN HOLE, SEE DETAIL 2/C008
- (11) REMOVE AND SALVAGE BOLLARDS
- (12) REMOVE, SALVAGE AND RELOCATE NEWS STAND
- (13) REMOVE AND SALVAGE BART SIGN
- (14) PROTECT AND PRESERVE (E) BRICK PAVERS IN THIS AREA
- (15) REMOVE, SALVAGE AND RELOCATE ART WORK. SEE A002 FOR MOUNTING AND REINSTALLATION DETAIL
- (16) REMOVE AND SALVAGE INFORMATION KIOSK
- (17) REMOVE AND SALVAGE AC TRANSIT BENCHES, COORDINATE WITH 'BUS BENCH' (818.313.8644) BEFORE REMOVAL
- (18) TELEPHONE TO REMAIN

20' 0' 20' 40'

GRAPHIC SCALE

REV.	DATE	BY	SUB	APP.	DESCRIPTION
1	20150811	JH	CK	CK	REISSUED FOR BID
P	20130628				ISSUED FOR BID

DESIGNED: J. STOCKHAM
DRAWN: C. ANGERS
CHECKED: Y. CHEN
APPROVED: C. KENT
DATE: 20130628

LICENSED LANDSCAPE ARCHITECT CHRISTOPHER M. KENT STATE OF CALIFORNIA MAY 31, 2014 Renewal Date JUNE 30, 2015

SAN FRANCISCO BAY AREA RAPID TRANSIT DISTRICT

PGAdesign, INC.

GENERAL ENGINEERING CONSULTANT

SUBMITTED _____ APPROVED _____

MACARTHUR STATION PLAZA REPLACEMENT

DEMOLITION PLAN

CADD FILENAME: C003.DWG
SIZE: D
SCALE: 1"=20'-0"
CONTRACT NO.: 17AJ-120
REV.: P
CONTRACT SHEET NO.: C003
PAGE NO.:

Jan 08, 2016 - 2:38pm F:\MacPlaza OAK\DWG\Current Set-MacPlaza\C003.dwg
Hirsch

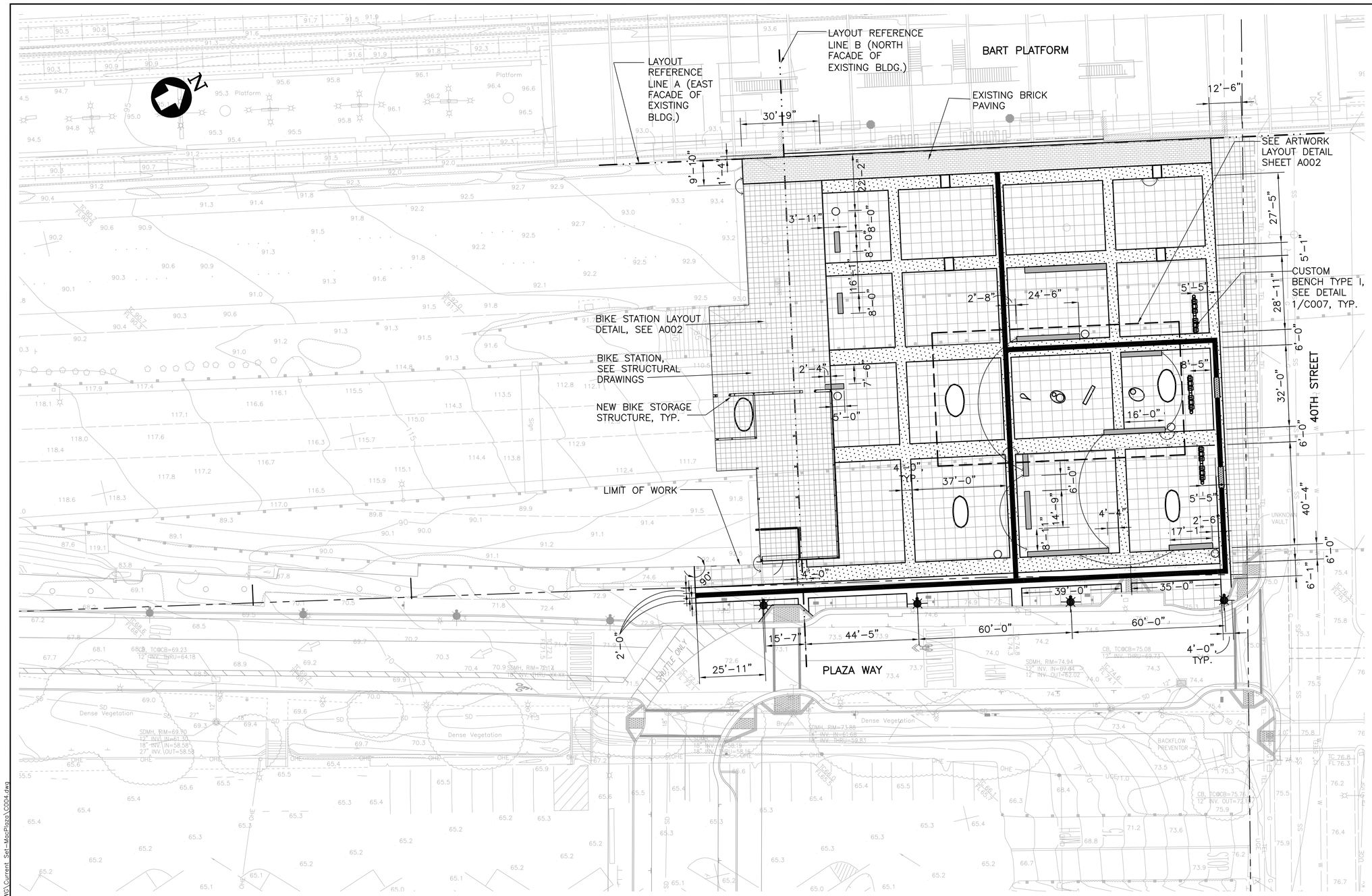

PLAN
SCALE: 1"=20'

NOTES:

1. FOR LEGEND, ABBREVIATIONS, AND GENERAL NOTES, SEE CONTRACT SHEETS NO. CS50 AND CS51.
2. DIMENSIONS ARE FROM OUTSIDE FACE OF BUILDING, WALLS, OR CURB UNLESS OTHERWISE NOTED, AND ARE TO BE VERIFIED IN THE FIELD PRIOR TO CONSTRUCTION AND MAJOR EXCAVATION. WRITTEN DIMENSIONS TAKE PRECEDENCE OVER SCALING.
3. UNLESS OTHERWISE NOTED, ANGLES TO BE RIGHT ANGLES, ARCS WHICH APPEAR TANGENT AND UNIFORM ARE TO BE TANGENT AND UNIFORM, LINES WHICH APPEAR PARALLEL ARE TO BE PARALLEL, AND ITEMS WHICH APPEAR CENTERED TO BE CENTERED, MAINTAIN LINES TRUE, LEVEL, PLUMB, AND SQUARE.
4. REFER TO GRADING PLANS FOR GRADING AND DRAINAGE STRUCTURES PRIOR TO INSTALLATION OF WALKS, WALLS, FOOTINGS, AND OTHER STRUCTURES.
5. ENGINEER TO APPROVE LAYOUT IN THE FIELD PRIOR TO CONSTRUCTION. AT TIME OF FIRST SITE VISIT AND BEFORE ANY MAJOR EXCAVATION, THE GENERAL LAYOUT OF SITE ELEMENTS SHOULD BE CONFIRMED. IN A SEPARATE SITE VISIT, ENGINEER TO CONFIRM LAYOUT OF FORMS.
6. VERIFY THAT CONDUITS AND SLEEVES ARE PLACED PRIOR TO POURING CONCRETE PAVING.
7. LOCATE ELECTRICAL JUNCTION BOXES FOR LIGHTS IN IN PAVING. LAYOUT TO BE APPROVED BY THE ENGINEER PRIOR TO TRENCHING.
8. QUANTITIES PROVIDED ARE FOR INFORMATION ONLY, VERIFY QUANTITIES AND NOTIFY ENGINEER OF DISCREPANCIES.

LEGEND:

- (E) PLAZA COLUMNS
- TRASH RECEPTACLES
- CAST-IN-PLACE CONCRETE SEATWALL
- TACTILE STRIP WITH DIRECTIONAL SURFACE TILE

20' 0' 20' 40'
GRAPHIC SCALE

REV.	DATE	BY	SUB	APP.	DESCRIPTION
1	20150811	JH	CK	CK	REISSUED FOR BID
P	20130628				ISSUED FOR BID

DESIGNED: J. STOCKHAM
DRAWN: C. ANGERS
CHECKED: Y. CHEN
APPROVED: C. KENT
DATE: 20130628

LICENSED LANDSCAPE ARCHITECT — CHRISTOPHER M. KENT — MAY 31, 2014 — Renewal Date — JUNE 28, 2013 — STATE OF CALIFORNIA

SAN FRANCISCO BAY AREA RAPID TRANSIT DISTRICT

PGAdesign, INC.

SUBMITTED _____ APPROVED _____

MACARTHUR STATION PLAZA REPLACEMENT

LAYOUT PLAN

CADD FILENAME: C004.DWG
SIZE: D SCALE: 1"=20'-0"
CONTRACT NO. 17AJ-120 REV. P
CONTRACT SHEET NO. C004 PAGE NO.

Jan 11, 2016 – 4:46pm F:\MacPlaza.OAK\DWG\Current Set-MacPlaza\C004.dwg
Hirsch

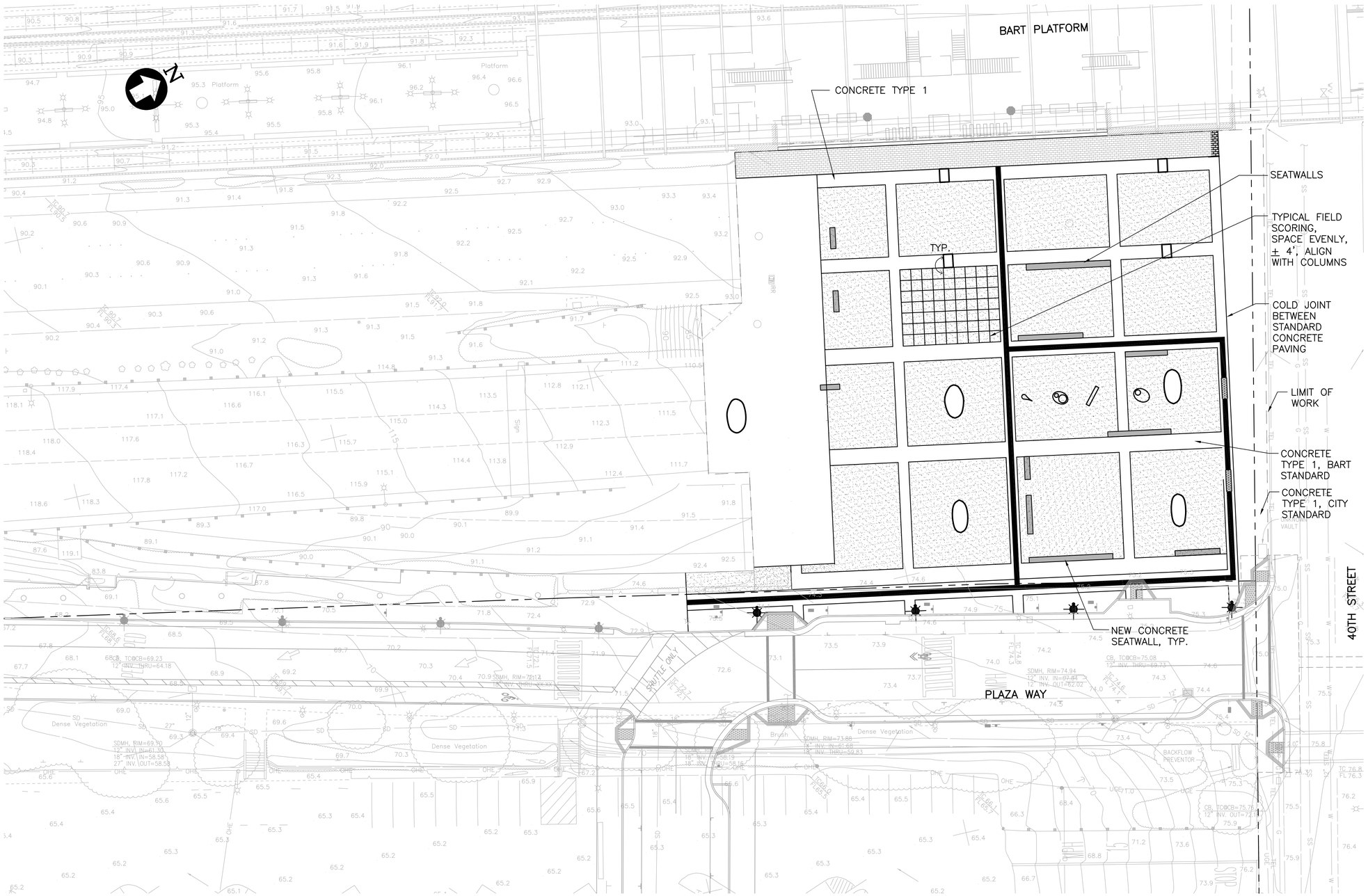

PLAN

SCALE: 1"=20'

NOTES:

1. FOR LEGEND, ABBREVIATIONS, AND GENERAL NOTES, SEE CONTRACT SHEETS NO. CS50 AND CS51.
2. FOR NEW CONCRETE SIDEWALK, USE DETAIL 2/CS06 FOR WET CLAY SUBGRADE CONDITION; FOR DRY CLAY SUBGRADE CONDITION, USE THE SAME DETAIL 2/CS06 BUT ELIMINATE THE LIME TREATMENT.
3. COLD JOINT POUR BETWEEN CITY CONCRETE POUR AND BART CONCRETE POUR.

LEGEND:

- CONCRETE TYPE 1, STANDARD GRAY
- CONCRETE TYPE 2, LAMP BLACK
- CAST–IN–PLACE CONCRETE SEATWALL, SEE DETAIL 1/C008
- TACTILE STRIP WITH DIRECTIONAL SURFACE TILE
- EXISTING BRICK VENEER PAVERS
- (E) PLAZA COLUMNS

20' 0' 20' 40'

GRAPHIC SCALE

REV.	DATE	BY	SUB	APP.	DESCRIPTION
1	20150811	JH	CK	CK	REISSUED FOR BID
A	20130628				ISSUED FOR BID

DESIGNED: J. STOCKHAM
DRAWN: C. ANGERS
CHECKED: Y. CHEN
APPROVED: C. KENT
DATE: 20130628

LICENSED LANDSCAPE ARCHITECT CHRISTOPHER W. KENT No. 3011 SIGN HERE MAY 30, 2014 Renewal Date JUNE 28, 2013 Date STATE OF CALIFORNIA

SAN FRANCISCO BAY AREA RAPID TRANSIT DISTRICT

PGAdesign, INC.

SUBMITTED _____ APPROVED _____

MACARTHUR STATION PLAZA REPLACEMENT

PAVING PLAN

CADD FILENAME: C005.DWG
SIZE: D SCALE: 1"=20'–0"
CONTRACT NO. 17AJ-120 REV. P
CONTRACT SHEET NO. C005 PAGE NO.

jhirsch Jan 08, 2016 – 3:05pm F:\MacPlaza OAK\DWG\Current Set–MacPlaza\C005.dwg

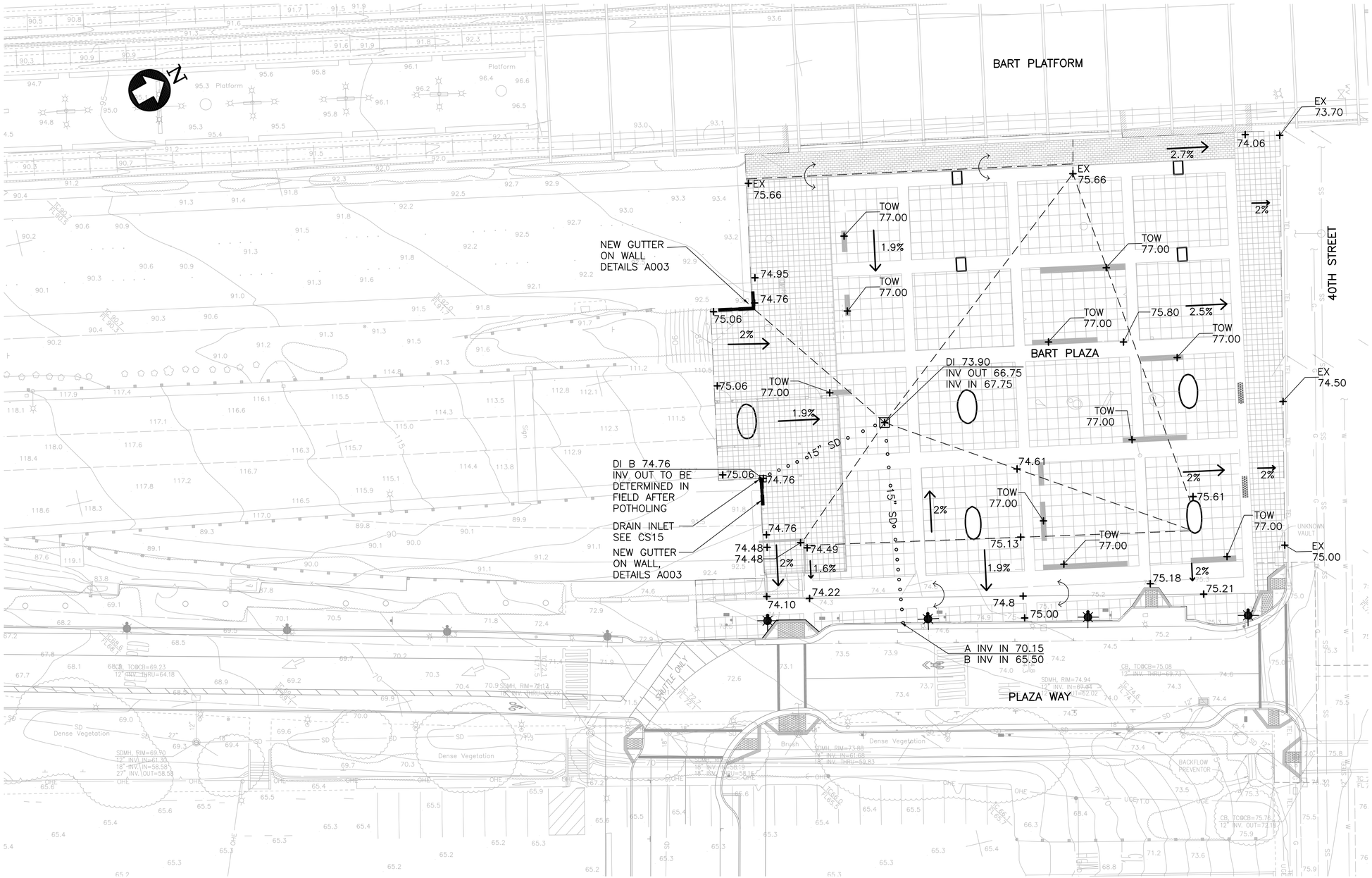

PLAN

SCALE: 1"=20'

NOTES:

1. FOR LEGEND, ABBREVIATIONS, AND GENERAL NOTES, SEE CONTRACT SHEETS NO. CS50 AND CS51.
2. PRIOR TO GRADING THE PLAZA, DETERMINE THE PILE CAPE ELEVATIONS OF THE COLUMNS AND ABUTMENT. IF THE PILE CAP ELEVATIONS ARE WITHIN 8 INCHES OF THE PROPOSED SURFACE GRADES SHOWN ON THE PLANS, ALERT THE PROJECT ENGINEER THAT GRADING NEEDS TO BE REVISED TO CONFORM TO NEW AS-BUILT GRADE INFORMATION.
3. BENCH MARK: THE CITY OF OAKLAND BENCHMARK, DESIGNATION 3047 WAS USED AS THE BASIS OF ELEVATION FOR THIS SURVEY. BM NO. 3047 IS A CUT SQUARE LOCATED 12 FEET WEST OF THE CENTERLINE OF TELEGRAPH AND 5 FEET NORTH OF THE CENTERLINE OF 38TH STREET. ELEV= 69.44 FEET
4. BASIS OF BEARINGS: BEARINGS AND DISTANCES ARE RELATED TO THE CALIFORNIA COORDINATE SYSTEM, ZONE 3, AS ESTABLISHED BY CITY OF OAKLAND MONUMENTS AND RECORD DATA SHOWN ON RIGHT OF WAY MAPS FOR HIGHWAY 24 AND BAY AREA RAPID TRANSIT DISTRICT.

LEGEND:

EL 74.50	PROPOSED SPOT ELEVATION
1.5%	SLOPE
DI 74.50	DRAIN INLET
EX 74.50	EXISTING SPOT ELEVATION
BC	BOTTOM OF CURB
□	DRAIN INLET GRATE
TOW	TOP OF WALL
	LIMIT OF WORK
— — — —	GRADE BREAK, PROPOSED RIDGE LINE
—— ——	LIMIT OF WORK
∘ ∘ ∘ ∘ ∘	15" STORM DRAIN PIPE
↻	MEET EXISTING GRADE

20' 0' 20' 40'

GRAPHIC SCALE

REV.	DATE	BY	SUB	APP.	DESCRIPTION
1	20150811	JH	CK	CK	REISSUED FOR BID
P	20130628				ISSUED FOR BID

DESIGNED: J. STOCKHAM
DRAWN: C. ANGERS
CHECKED: Y. CHEN
APPROVED: C. KENT
DATE: 20130628

LICENSED LANDSCAPE ARCHITECT — CHRISTOPHER M. KENT — MAY 31, 2014 — JUNE 28, 2013 — STATE OF CALIFORNIA

SAN FRANCISCO BAY AREA RAPID TRANSIT DISTRICT

PGAdesign, INC.

GENERAL ENGINEERING CONSULTANT

SUBMITTED _____ APPROVED _____

MACARTHUR STATION PLAZA REPLACEMENT

GRADING AND DRAINAGE PLAN

CADD FILENAME: C006.DWG
SIZE: D
SCALE: 1"=20'-0"
CONTRACT NO.: 17AJ-120
REV.: P
CONTRACT SHEET NO.: C006
PAGE NO.:

Jun 08, 2016 - 3:09pm F:\MacPlaza.OAK\DWG\Current Set-MacPlaza\C006.dwg
Hirsch

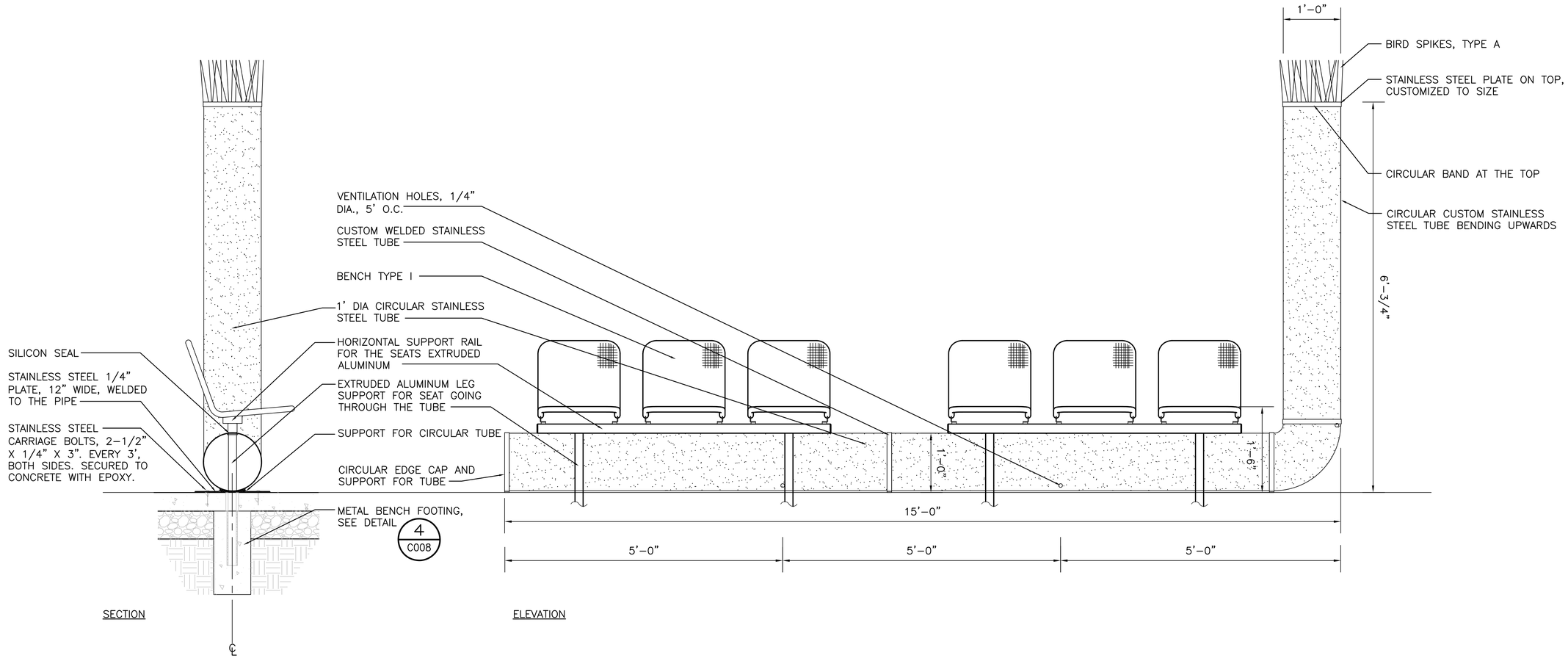

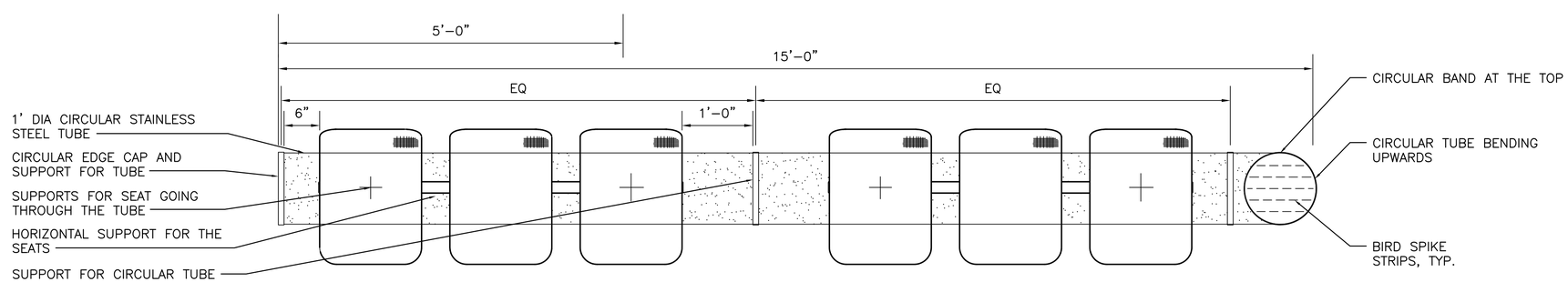

NOTE:
SHOP DRAWINGS REQUIRED

CUSTOM METAL BENCH

SCALE: 1"= 1'-0"

1 / C007

REV.	DATE	BY	SUB	APP.	DESCRIPTION
1	20150811	JH	CK	CK	REISSUED FOR BID
P	20130628				ISSUED FOR BID

DESIGNED: J. STOCKHAM
DRAWN: C. ANGERS
CHECKED: Y. CHEN
APPROVED: C. KENT
DATE: 20130628

LICENSED LANDSCAPE ARCHITECT — CHRISTOPHER W. KENT — Date Signed MAY 31, 2014 — Renewal Date JUNE 28, 2013 — STATE OF CALIFORNIA

SAN FRANCISCO BAY AREA RAPID TRANSIT DISTRICT

PGAdesign, INC.

SUBMITTED _____ APPROVED _____

MACARTHUR STATION PLAZA REPLACEMENT

SITE DETAILS

CADD FILENAME: C007.DWG
SIZE: D | SCALE: AS SHOWN
CONTRACT NO.: 17AJ-120 | REV.: P
CONTRACT SHEET NO.: C007 | PAGE NO.:

hirsch Jan 08, 2016 - 3:15pm F:\MacPlaza OAK\DWG\Current Set-MacPlaza\C007.dwg

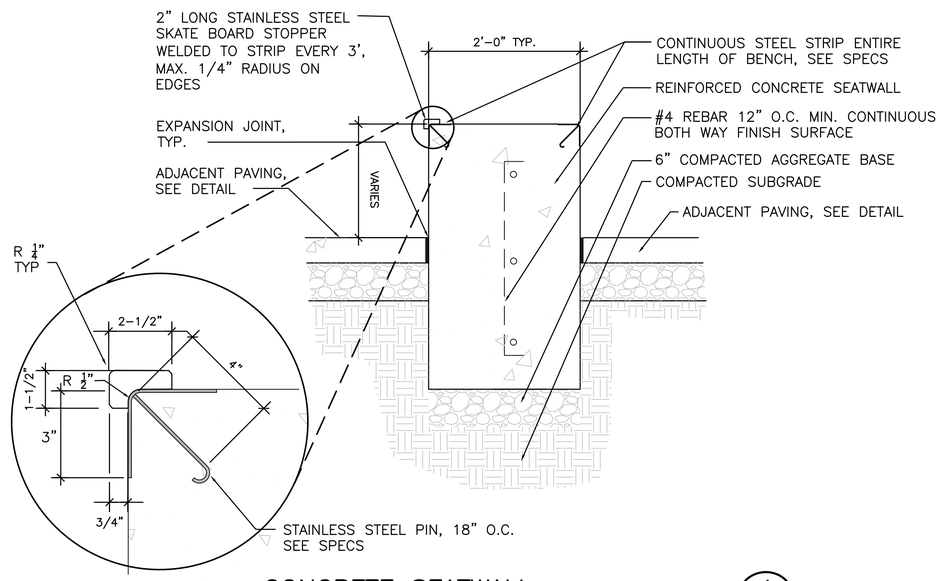

CONCRETE SEATWALL

SCALE: 1"= 1'-0"

1 / C008

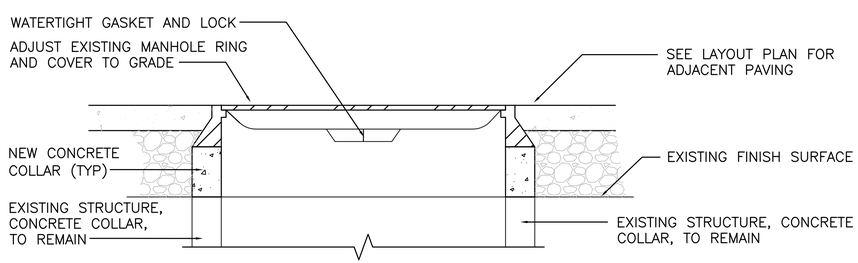

MANHOLE AND COVER ADJUSTMENT

SCALE: NTS

2 / C008

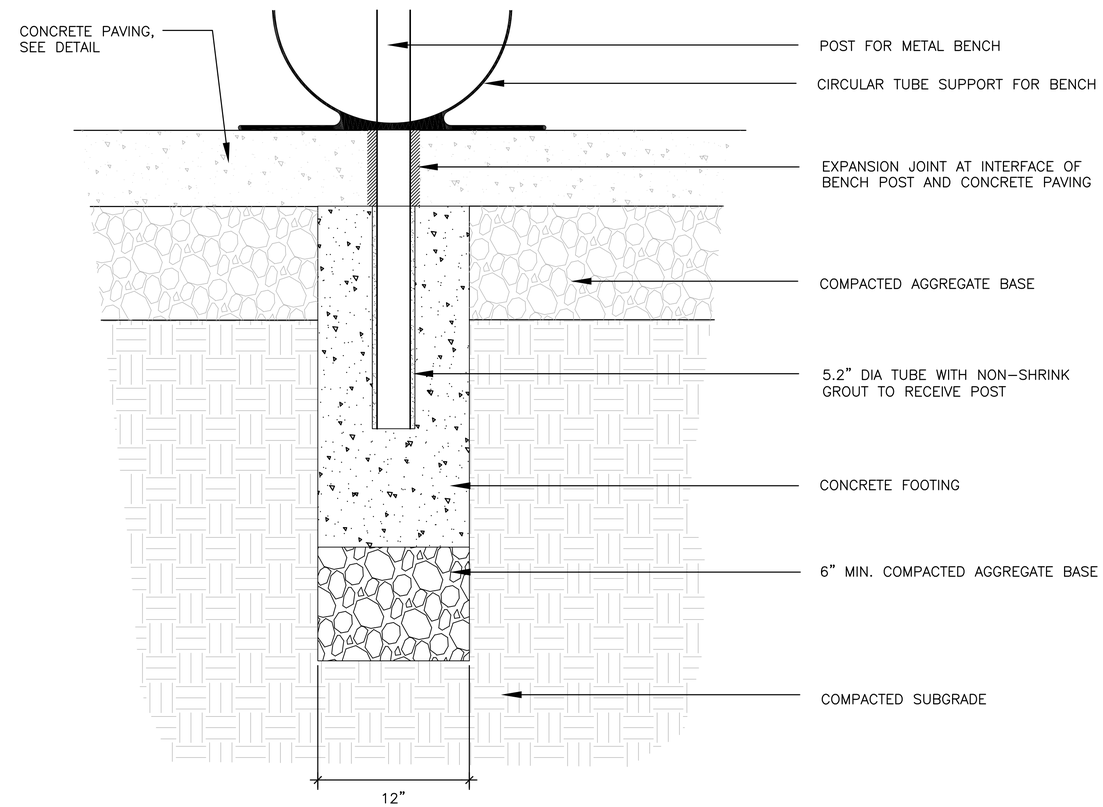

METAL BENCH FOOTING

SCALE: NTS

4 / C008

REV.	DATE	BY	SUB	APP.	DESCRIPTION
1	20150811	JH	CK	CK	REISSUED FOR BID
P	20130628				ISSUED FOR BID

DESIGNED: J. STOCKHAM
DRAWN: C. ANGERS
CHECKED: Y. CHEN
APPROVED: C. KENT
DATE: 20130628

LICENSED LANDSCAPE ARCHITECT — CHRISTOPHER W. KENT — Signature — Date Signed: MAY 31, 2014 — Renewal Date: JUNE 30, 2015 — STATE OF CALIFORNIA

SAN FRANCISCO BAY AREA RAPID TRANSIT DISTRICT

PGAdesign, INC.

SUBMITTED _____ APPROVED _____

MACARTHUR STATION PLAZA REPLACEMENT

SITE DETAILS

CADD FILENAME: C008.DWG
SIZE: D — SCALE: AS SHOWN
CONTRACT NO.: 17AJ-120 — REV.: P
CONTRACT SHEET NO.: C008 — PAGE NO.:

hirsch Jan 08, 2016 - 3:39pm F:\MacPlaza_OAK\DWG\Current Set-MacPlaza\C008.dwg

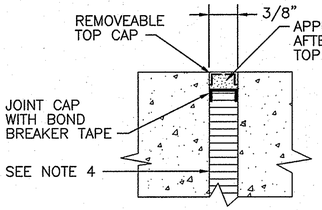

EXPANSION JOINT

SECTION A CS06
SCALE: NTS

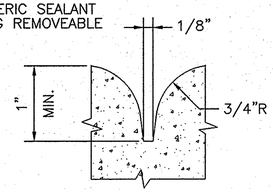

WEAKENED PLANE JOINT

SECTION B CS06
SCALE: NTS

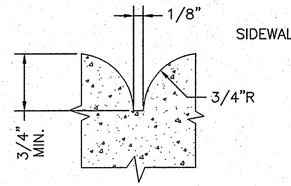

SCORE JOINT

SECTION C CS06
SCALE: NTS

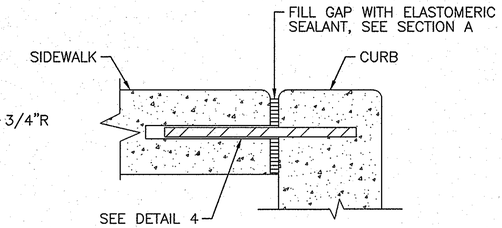

SECTION D CS06
SCALE: NTS

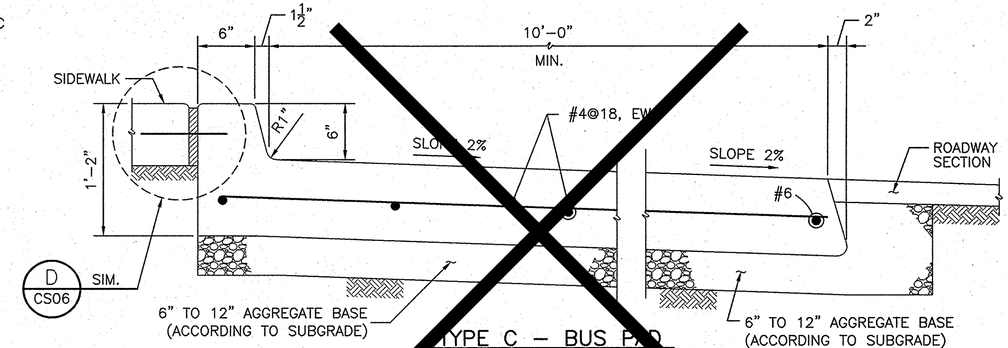

TYPE C – BUS PAD

DETAIL 1 CS06
SCALE: 1 1/2"=1'-0"

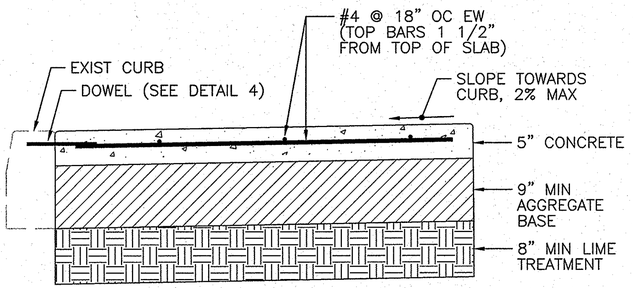

FOR EXPANSIVE SOIL (CLAY SUBGRADE) CONCRETE SIDEWALK

DETAIL 2 CS06
SCALE: 1"=1'-0"

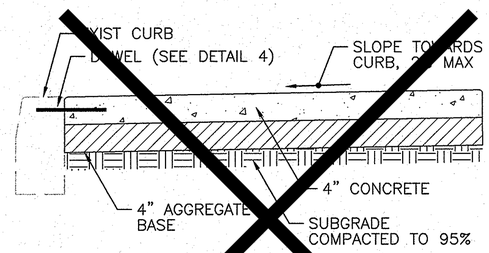

FOR GRANULAR OR SANDY CONCRETE SIDEWALK

DETAIL 3 CS06
SCALE: 1"=1'-0"

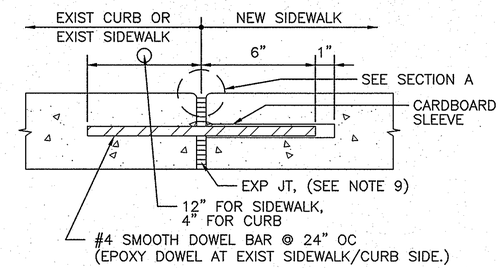

DOWEL

DETAIL 4 CS06
SCALE: NTS

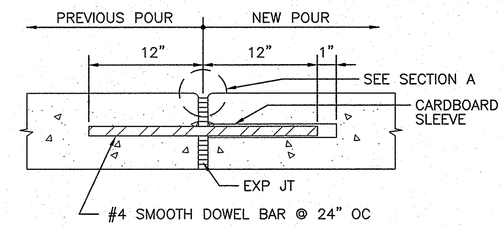

DOWEL

DETAIL 5 CS06
SCALE: NTS

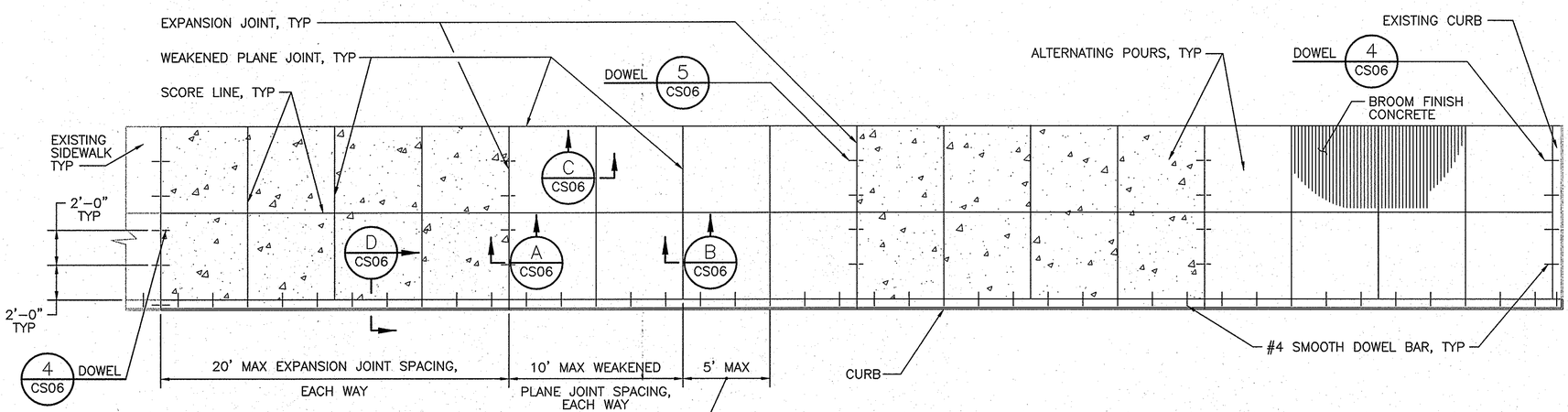

PLAN
SCALE: 1/4"=1'-0"

SIDEWALK AND CURB JOINT AND SCORE LINE LAYOUT

NOTES:

1. CONCRETE SHALL BE CLASS 3000 – 3/4" MAXIMUM AGGREGATE SIZE, MINIMUM SIX SACK MIX, UNLESS INDICATED OTHERWISE.
2. EXPANSION JOINT SHALL BE PREMOLDED JOINT FILLER EXTENDING TO THE BOTTOM SURFACE OF THE CONCRETE.
3. PROVIDE EXPANSION JOINTS IN ALL CONCRETE CURBS AND GUTTERS AT THE END OF CURB RETURNS AND AT INTERFACES WITH STRUCTURES.
4. EXPANSION JOINTS IN SIDEWALK SHALL EXTEND THROUGH THE ADJACENT CURB AND GUTTER.
5. PROVIDE EXPANSION JOINTS AT INTERFACES WITH NEW OR EXISTING STRUCTURES.
6. WHERE NEW SIDEWALK ABUTS OR INTERFACES WITH EXISTING SIDEWALK, MATCH EXISTING JOINTS AND BROOM FINISH PATTERNS.
7. MAXIMUM AREA WITHIN SCORE LINES SHALL BE 25 SQUARE FEET UNLESS OTHERWISE PERMITTED BY THE ENGINEER.
8. COMPACT ALL SUBGRADE BELOW CURBS, GUTTERS AND SIDEWALKS TO 95% COMPACTION.
9. THE INTERFACE BETWEEN NEW SIDEWALK AND EXISTING CURB SHALL NOT HAVE EXPANSION JOINT MATERIAL.

REV.	DATE	BY	CHKD.	APP.	DESCRIPTION
00	08/04				DRAWN PER BECO EM001151

THIS DRAWING IS INTENDED SOLELY FOR BART USE IN ORDER TO DESIGN, CONSTRUCT, ALTER, OR MAINTAIN ITS FACILITIES. BART DOES NOT RECOMMEND OR WARRANT USE OF THE DRAWING FOR ANY OTHER PURPOSE. USE OF THE DRAWING BEYOND THE INTENDED PURPOSE WILL BE AT USER'S OWN RISK.

REGISTERED PROFESSIONAL ENGINEER EDSTEN Y. IMAGAL No. C40366 Exp. 03-31-07 CIVIL STATE OF CALIFORNIA

BART

DESIGNED: BATC	DATE: 09/91
DRAWN:	
CHECKED:	
APPROVED:	

BART FACILITIES STANDARDS
CIVIL

SIDEWALK DETAILS

REF. NO. CS06
SIZE: D SCALE: NOTED
CONTRACT
REV. 00
SHEET NO. CS06
PG. NO.

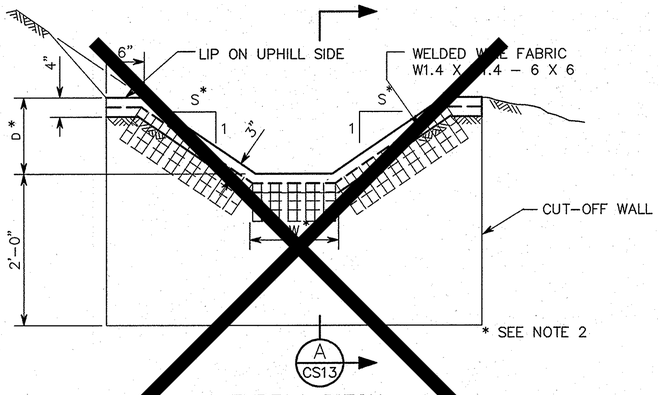

TYPE A DITCH

DETAIL 1 CS13
SCALE: 1"=1'-0"

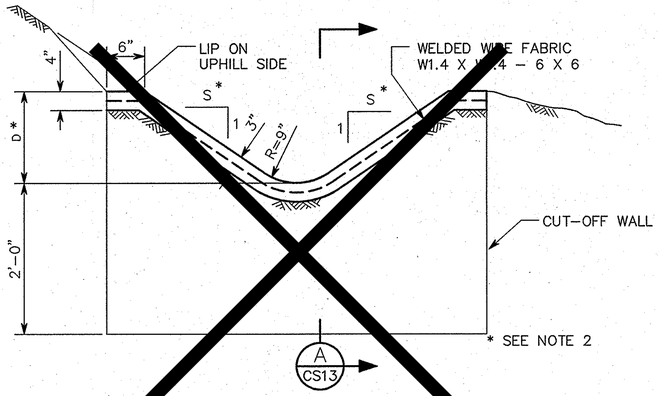

TYPE B DITCH

DETAIL 2 CS13
SCALE: 1"=1'-0"

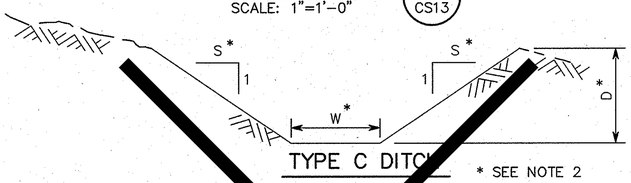

TYPE C DITCH

DETAIL 3 CS13
SCALE: 1"=1'-0"

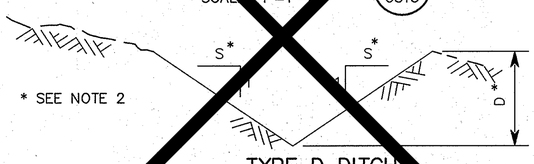

TYPE D DITCH

DETAIL 4 CS13
SCALE: 1"=1'-0"

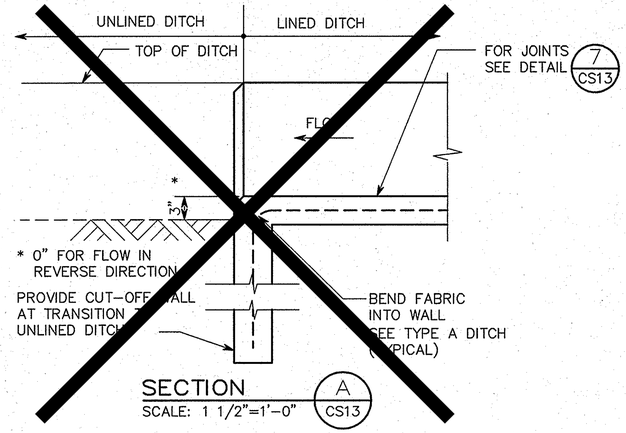

SECTION A CS13
SCALE: 1 1/2"=1'-0"

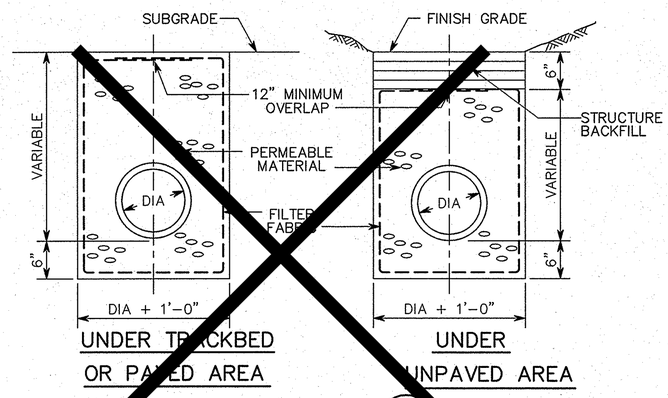

SECTION B CS13
SCALE: 1"=1'-0"

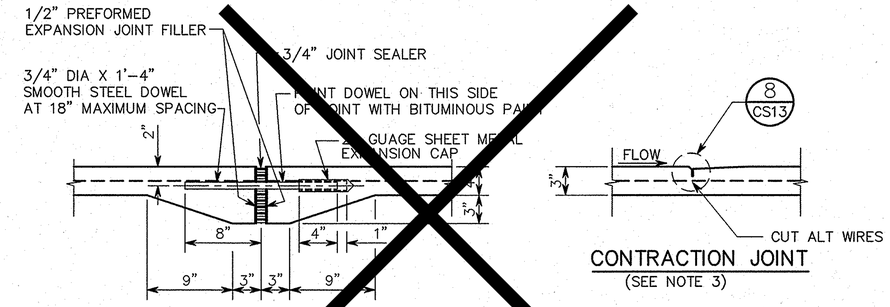

EXPANSION JOINT
(SEE NOTE 3)

CONTRACTION JOINT
(SEE NOTE 3)

JOINTS AT LINED DITCHES

DETAIL 7 CS13
SCALE: 1 1/2"=1'-0"

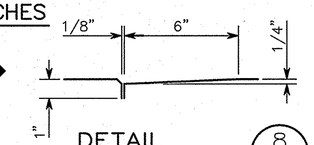

DETAIL 8 CS13
SCALE: 3"=1'-0"

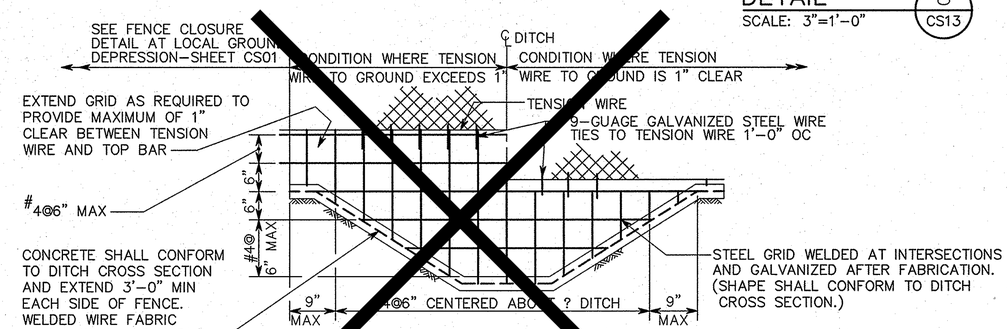

DITCH CLOSURE

DETAIL 9 CS13
SCALE: NTS

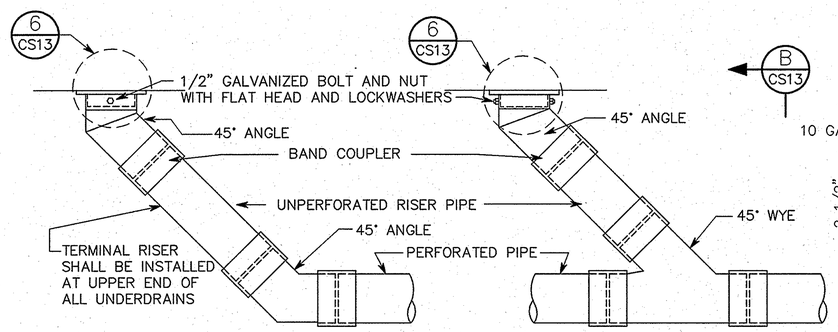

TERMINAL RISER

INTERMEDIATE RISER

UNDERDRAIN

DETAIL 5 CS13
SCALE: 1"=1'-0"

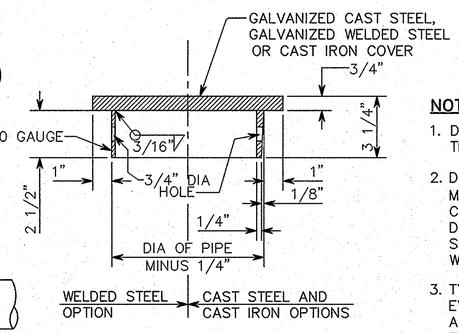

DETAIL 6 CS13
SCALE: 3"=1'-0"

NOTES:

1. DITCH LINING SHALL BE CONCRETE OR SHOTCRETE AT THE OPTION OF THE CONTRACTOR.
2. DITCH DIMENSIONS SHALL CONFORM TO THE FOLLOWING MINIMUM DIMENSIONS UNLESS OTHERWISE SHOWN ON OTHER CONTRACT DRAWINGS:
   D = DEPTH OF DITCH, 1'-0" MINIMUM.
   S = SLOPE OF DITCH SIDES, 1 1/2" MINIMUM.
   W = WIDTH OF BOTTOM OF DITCH, 1'-6" MINIMUM.
3. TYPE A AND B DITCHES SHALL HAVE A CONTRACTION JOINT EVERY 10'-0". WHERE SHOTCRETE IS USED, TYPE A AND TYPE B DITCHES SHALL HAVE AN EXPANSION JOINT EVERY 100'-0".
4. DITCH CLOSURE SHALL BE REQUIRED AT EACH LOCATION WHERE A DRAINAGE DITCH PASSES UNDER A FENCE.

REV.	DATE	BY	CHKD.	APP.	DESCRIPTION
00	08/04				DRAWN PER BECO EM001151

THIS DRAWING IS INTENDED SOLELY FOR BART USE IN ORDER TO DESIGN, CONSTRUCT, ALTER, OR MAINTAIN ITS FACILITIES. BART DOES NOT RECOMMEND OR WARRANT USE OF THE DRAWING FOR ANY OTHER PURPOSE. USE OF THE DRAWING BEYOND THE INTENDED PURPOSE WILL BE AT USER'S OWN RISK.

REGISTERED PROFESSIONAL ENGINEER ERSTEN Y. IMAGONA No. C40366 Exp. 03-31-07 CIVIL STATE OF CALIFORNIA

BART

DESIGNED: BATC	DATE: 09/91
DRAWN:	
CHECKED:	
APPROVED:	

BART FACILITIES STANDARDS
CIVIL

DRAINAGE DETAILS
DITCHES AND UNDERDRAINS

REF. NO. CS13
SIZE: D SCALE: NONE
CONTRACT
REV. 00
SHEET NO. CS13
PG. NO.

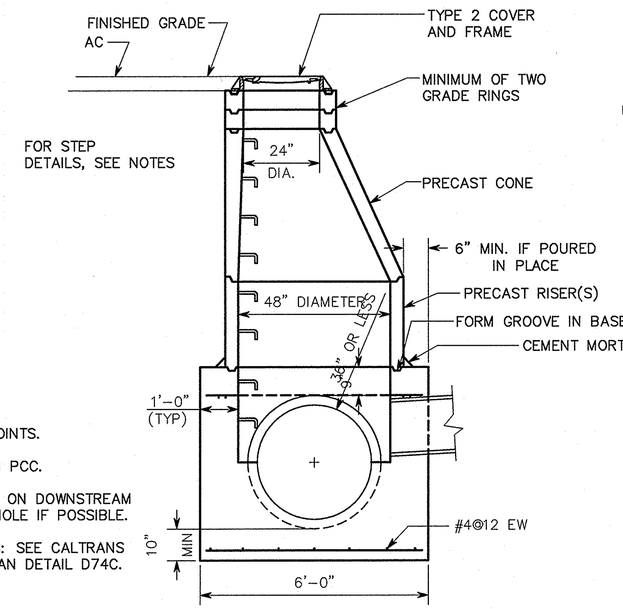

NOTES:

1. GROUT ALL JOINTS.
2. ALL 4000 PSI PCC.
3. PLACE STEPS ON DOWNSTREAM SIDE OF MANHOLE IF POSSIBLE.
4. STEP DETAILS: SEE CALTRANS STANDARD PLAN DETAIL D74C.

SECTION A CS15
SCALE: 1/2"=1'-0"

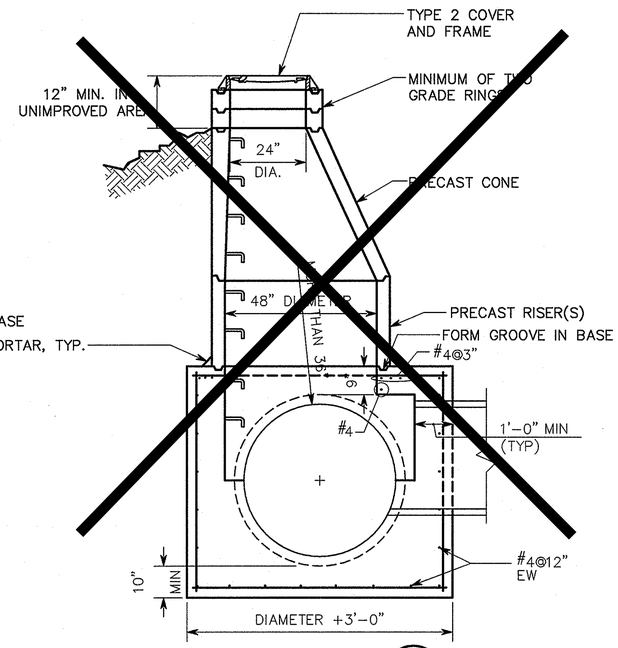

SECTION B CS15
SCALE: 1/2"=1'-0"

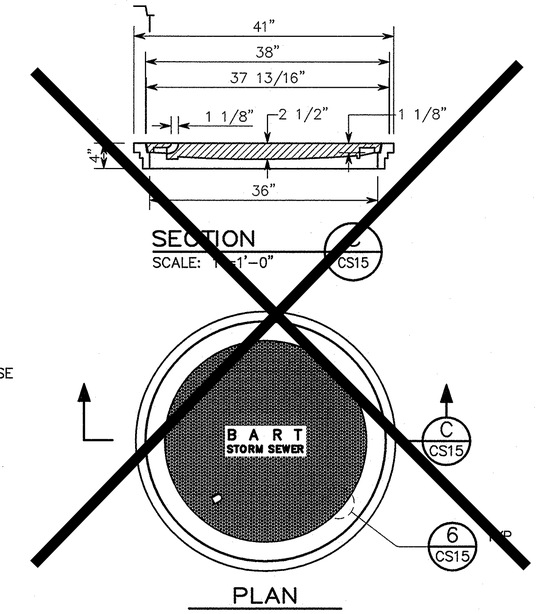

SECTION C CS15
SCALE: 1"=1'-0"

PLAN

TYPE 1 COVER AND FRAME
(WEIGHT=700#)

DETAIL 3 CS15
SCALE: 1"=1'-0"

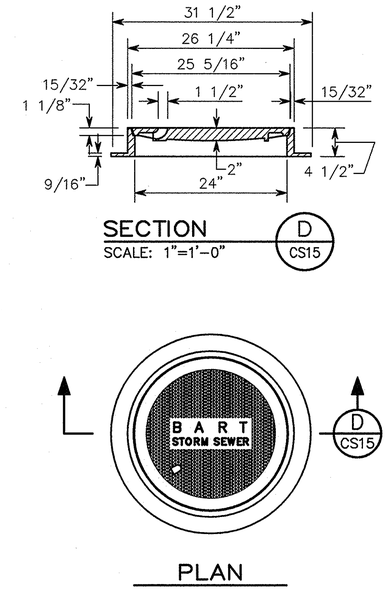

SECTION D CS15
SCALE: 1"=1'-0"

PLAN

TYPE 2 COVER AND FRAME
(WEIGHT=320#)

DETAIL 4 CS15
SCALE: 1"=1'-0"

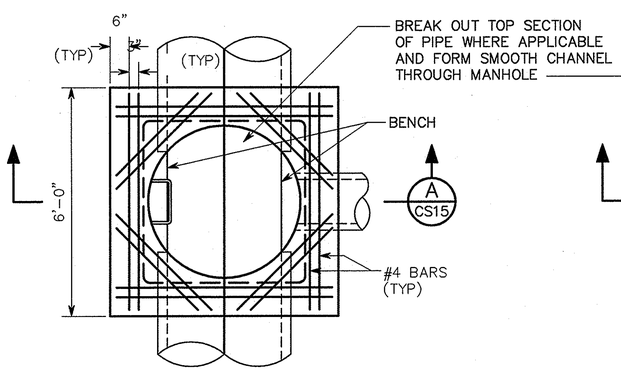

PLAN

MANHOLE FOR PIPE DIAMETER 36" OR LESS

DETAIL 1 CS15
SCALE: 1/2"=1'-0"

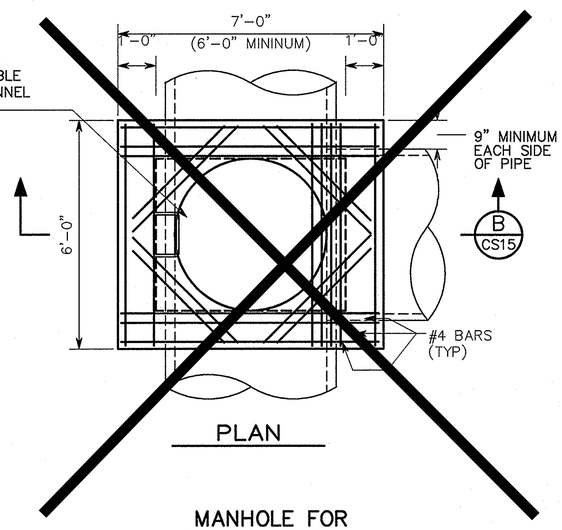

PLAN

MANHOLE FOR PIPE DIAMETER MORE THAN 36"

DETAIL 2 CS15
SCALE: 1/2"=1'-0"

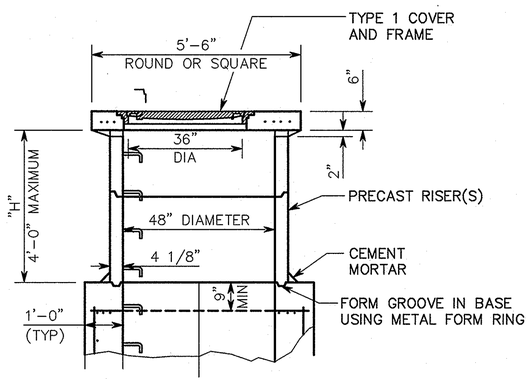

ALTERNATE CHIMNEY AND GRADE SLAB
(REQUIRED WHERE "H" IS LESS THAN 4'-0")

DETAIL 5 CS15
SCALE: 1/2"=1'-0"

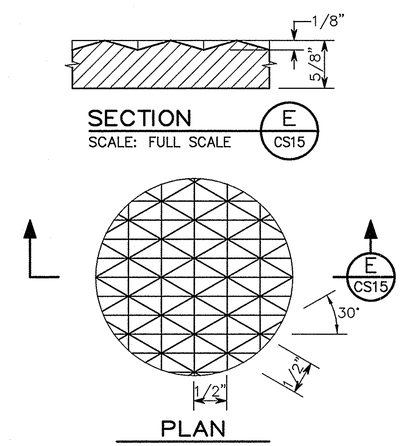

SECTION E CS15
SCALE: FULL SCALE

PLAN

MANHOLE COVER PATTERN

DETAIL 6 CS15
SCALE: FULL SCALE

REV.	DATE	BY	CHKD.	APP.	DESCRIPTION
01	09/08	VC	[illegible]	ISL	REVISED PER BECO EM001536

THIS DRAWING IS INTENDED SOLELY FOR BART USE IN ORDER TO DESIGN, CONSTRUCT, ALTER, OR MAINTAIN ITS FACILITIES. BART DOES NOT RECOMMEND OR WARRANT USE OF THE DRAWING FOR ANY OTHER PURPOSE. USE OF THE DRAWING BEYOND THE INTENDED PURPOSE WILL BE AT USER'S OWN RISK.

ORIGINAL DRAWING BEARS THE REGISTERED PROFESSIONAL ENGINEER SEAL NO.: C40366 AND SIGNATURE OF: ERSTEN Y. IMAOKA

BART

		DATE:
DESIGNED:	BATC	09/91
DRAWN:	[illegible]	09/08
CHECKED:	[illegible]	09/08
APPROVED:	[illegible]	09/08

BART FACILITIES STANDARDS
CIVIL

DRAINAGE DETAILS
STORM SEWER MANHOLES

REF. NO. CS15
SIZE: D | SCALE: NONE
CONTRACT | REV. 01
SHEET NO. CS15 | PG. NO.

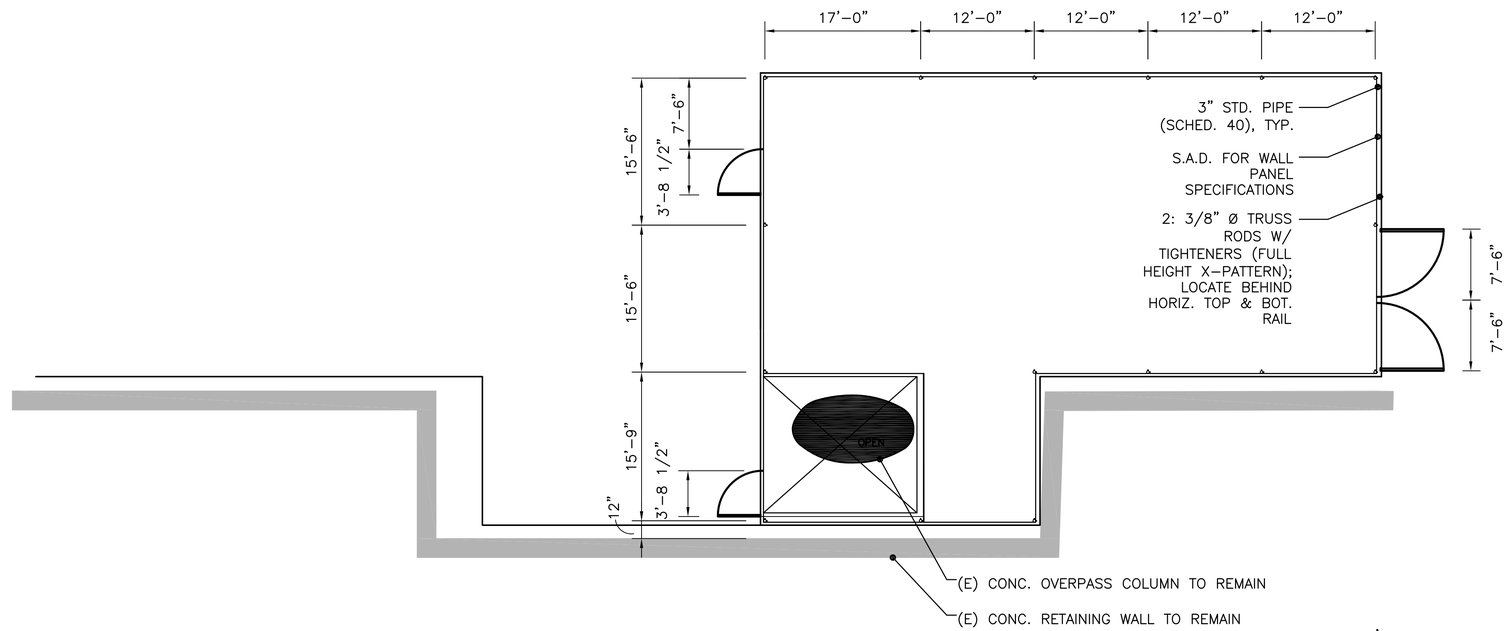

ROOF FRAMING PLAN WITH WALLS BELOW

SCALE: 1/8"=1'-0"

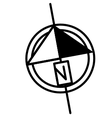

NOTES:

1. ALL DIMENSIONS AND FRAMING LOCATIONS ARE APPROXIMATE. V.I.F. ALL MEASURMENTS, ELEVATIONS, AND FINISHES, E.T.C. DETERMINE EXISTING GRADES IN FIELD. VERIFY OVERALL ELEVATIONS AND ADJUST AS REQUIRED. DO NOT SCALE PLANS.
2. CONSULT W/ ENGINEER FOR ANY DISCOVERED CONDITIONS (I.E. FRAMING AND FOUNDATIONS) THAT DIFFER THAN AS INDICATED ON THESE PLANS SO THAT ADJUSTMENTS CAN BE MADE AS REQUIRED.
3. VERIFY IN FIELD SIZE AND DEPTH OF FLOOR AND WALL FRAMING. IF (E) FLOOR FRAMING IS DEEPER THAN 12", DEEPEN NEW FLUSH BEAMS AND SISTERED FRAMING TO MATCH (E) FRAMING DEPTH.
4. SHEAR PANEL SHEATHING MAY BE PLACED ON OPPOSITE SIDE OF WALL AS INDICATED.
5. SHEAR PANEL MARKED AS OPTIONAL MAY BE OMITTED AT OWNER'S OPTION.
6. BUILDER IS TO PROVIDE SHEATHING, NAILING, BOLTS, AND CLIPS TO A MINIMUM SIZE AND SPACING AS SPECIFIED ON THESE PLANS.
7. HARDWARE SUBSTITUTIONS ARE ALLOWABLE W/ APPROVAL BY ENGINEER.
8. (N) STUDS, SILLS, ETC. IN CONTACT W/ CONC. OR MASONRY TO BE PRESSURE TREATED LUMBER.

REV.	DATE	BY	SUB	APP.	DESCRIPTION
2	20151211				REISSUED FOR BID
1	20150811				REISSUED FOR BID
P	20130628				ISSUED FOR BID

DESIGNED: C.C.S./T.M.B.
DRAWN: A.E./T.M.B.
CHECKED: T.M.B.
APPROVED: C.C.S.
DATE: 20130628

SAN FRANCISCO BAY AREA RAPID TRANSIT DISTRICT

PGAdesign, INC.

SUBMITTED _____ APPROVED _____

MACARTHUR STATION PLAZA REPLACEMENT

BIKE STATION ROOF FRAMING PLAN

CADD FILENAME: SS01.DWG
SIZE: D SCALE: AS SHOWN
CONTRACT NO.: 17AJ-120 REV.: P
CONTRACT SHEET NO.: SS01 PAGE NO.:

hirsch Jan 08, 2016 - 3:32pm F:\MacPlaza.OAK\DWG\Current Set-MacPlaza\SS01.dwg

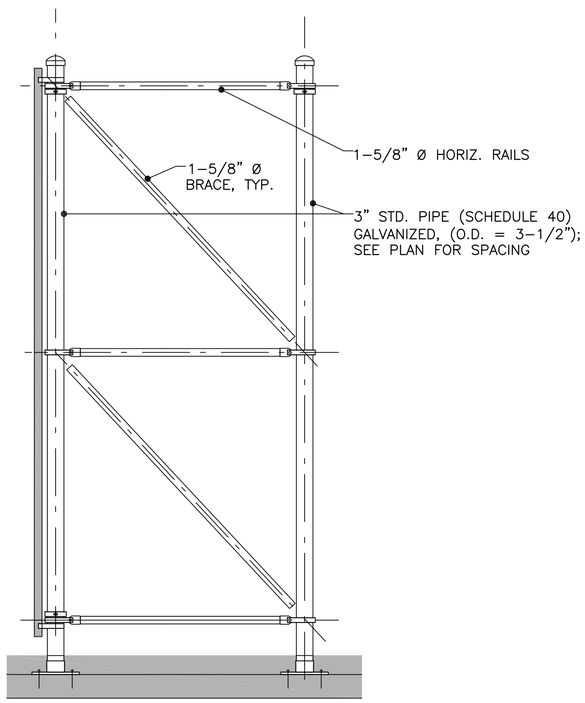

1 Typ. Braced Frame
SCALE: 3/4" = 1' – 0"

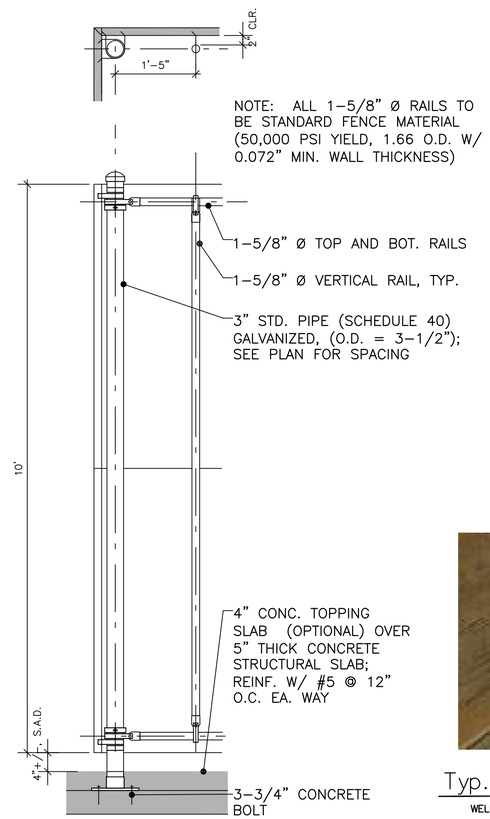

2 Typ. Corner Post
SCALE: 3/4" = 1' – 0"

Typ. Fence Line Clamp

PROVIDE CLAMP EA. SIDE; CLAMPS COME IN 3–WAY, 4–WAY, AND 5–WAY CONNECTORS

Typ. Dome Post Cap

Typ. Band Connectors @ Rails

Typ. Pipe Base Conn.

WELD VERTICAL PIPE TO PIPE SLEEVE

Typ. Swing Gate/Trash Enclosure

REV.	DATE	BY	SUB	APP.	DESCRIPTION	REV.	DATE	BY	SUB	APP.	DESCRIPTION
1	20150811				REISSUED FOR BID						
P	20130628				ISSUED FOR BID						

DESIGNED: C.C.S./T.M.B.
DRAWN: A.E./T.M.B.
CHECKED: T.M.B.
APPROVED: C.C.S.
DATE: 20130628

SAN FRANCISCO BAY AREA RAPID TRANSIT DISTRICT

PGAdesign, INC.

SUBMITTED _____ APPROVED _____

MACARTHUR STATION PLAZA REPLACEMENT

BIKE STATION CONNECTION AND IMAGES

CADD FILENAME: SS02.DWG
SIZE: D | SCALE: AS SHOWN
CONTRACT NO.: 17AJ-120 | REV.: P
CONTRACT SHEET NO.: SS02 | PAGE NO.:

lhirsch Oct 26, 2015 – 4:48pm F:\MacPlaza OAK\DWG\Current Set–MacPlaza\SS02.dwg

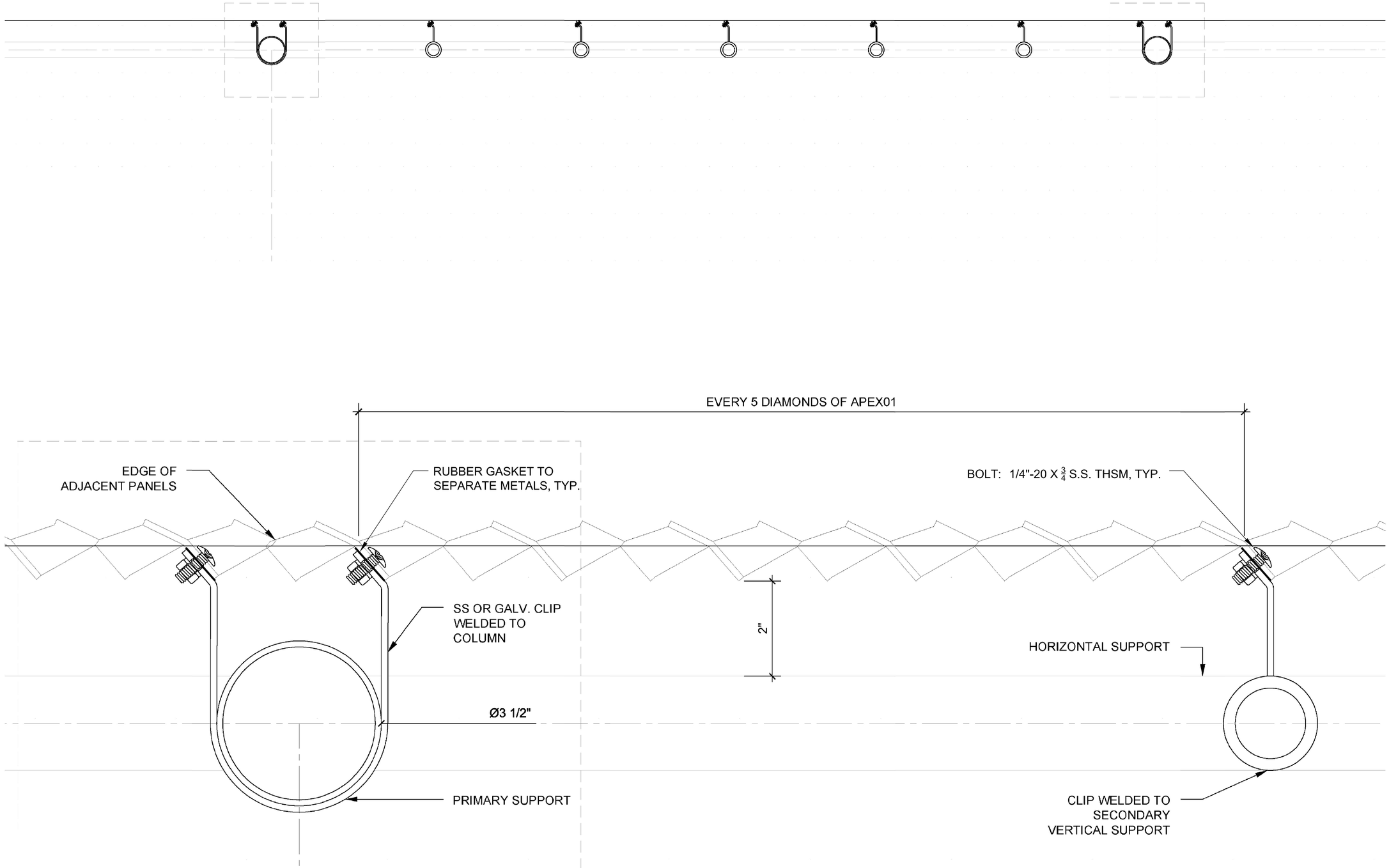

REV.	DATE	BY	SUB	APP.	DESCRIPTION	REV.	DATE	BY	SUB	APP.	DESCRIPTION

DESIGNED: C.C.S./T.M.B.
DRAWN: A.E./T.M.B.
CHECKED: T.M.B.
APPROVED: C.C.S.
DATE: 20150811

SAN FRANCISCO BAY AREA RAPID TRANSIT DISTRICT

PGAdesign, INC.

SUBMITTED _____ APPROVED _____

MACARTHUR STATION PLAZA REPLACEMENT

BIKE STATION PANEL TO CLIP CONNECTION

CADD FILENAME: SS03.DWG
SIZE: D | SCALE: AS SHOWN
CONTRACT NO.: **17AJ-120** | REV.: **P**
CONTRACT SHEET NO.: **SS03** | PAGE NO.:

hirsch Oct 26, 2015 – 4:52pm F:\MacPlaza.OAK\DWG\Current Set-MacPlaza\SS03.dwg

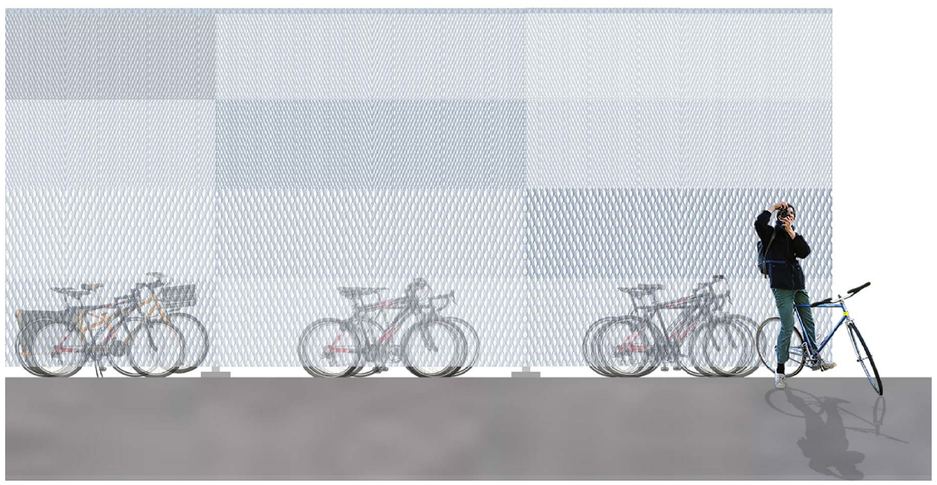

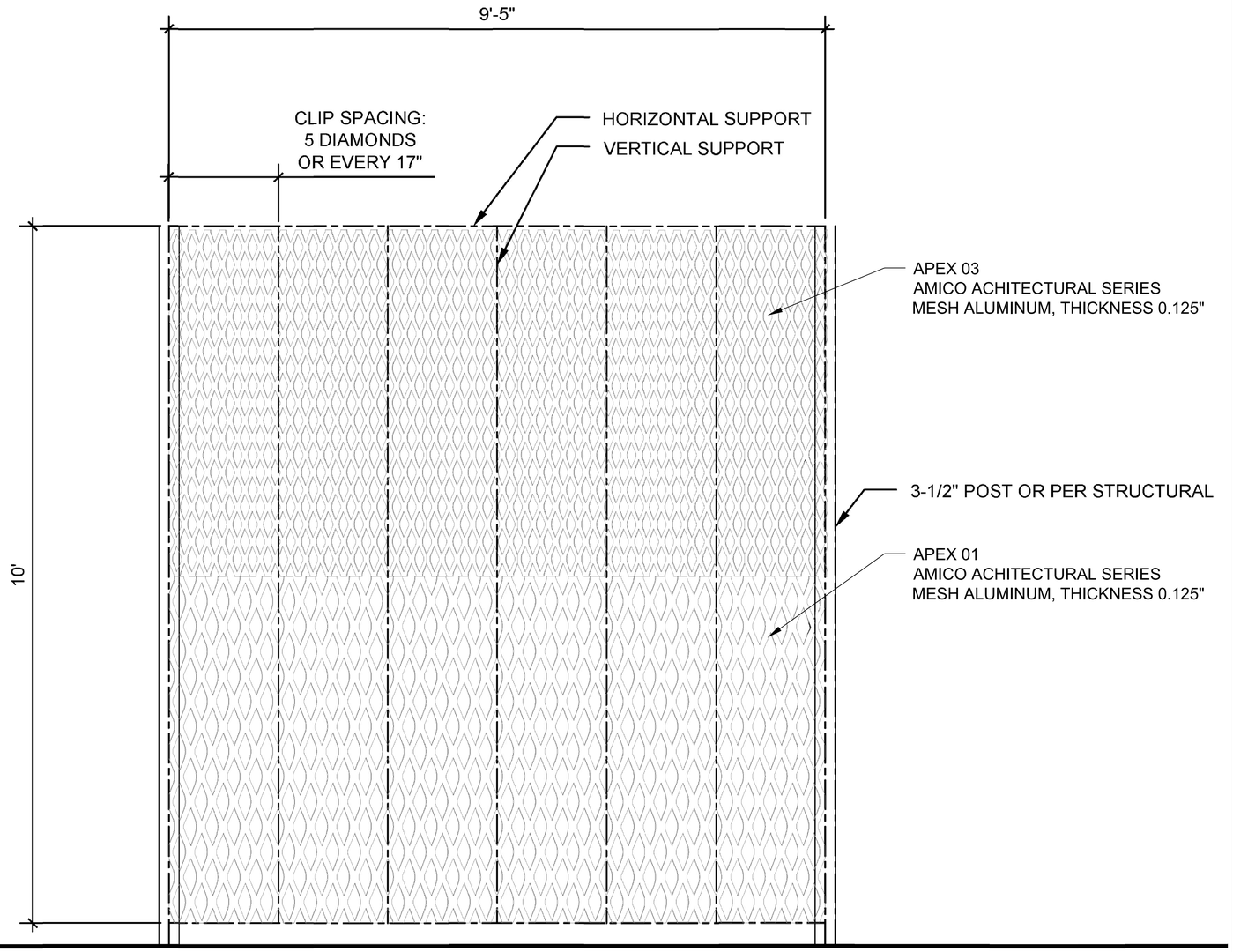

PARTIAL ELEVATION

hirsch Sep 14, 2015 – 3:20pm F:\MacPlaza OAK\DWG\Current Set-MacPlaza\SS04.dwg

REV.	DATE	BY	SUB	APP.	DESCRIPTION	REV.	DATE	BY	SUB	APP.	DESCRIPTION

DESIGNED: C.C.S./T.M.B.
DRAWN: A.E./T.M.B.
CHECKED: T.M.B.
APPROVED: C.C.S.
DATE: 20150811

SAN FRANCISCO BAY AREA RAPID TRANSIT DISTRICT

PGAdesign, INC.

SUBMITTED _____ APPROVED _____

MACARTHUR STATION PLAZA REPLACEMENT

BIKE STATION PARTIAL ELEVATION

CADD FILENAME: SS04.DWG
SIZE: D
SCALE: 1" = 1'-0"
CONTRACT NO.: **17AJ-120**
REV.: **P**
CONTRACT SHEET NO.: **SS04**
PAGE NO.:

ABBREVIATIONS

AC	ACRES
ACOUS	ACOUSTICAL
AD	AREA DRAIN
ADJ	ADJUSTABLE
AFC	AUTOMATIC FARE COLLECTION
AL/ALUM	ALUMINUM
AP	ACCESS PANEL
APPROX	APPROXIMATE
ARCH	ARCHITECTURAL
ASPH	ASPHALT
BC	BOTTOM OF CURB
BD	BOARD
BITUM	BITUMINOUS
BLDG	BUILDING
BLKG	BLOCKING
BM	BEAM
BOT	BOTTOM
BS	BOTTOM OF SLOPE
CAB	CABINET
CAL	CALIPER
CB	CATCH BASIN
CCTV	CLOSED CIRCUIT TELEVISION
CEM	CEMENT
CER	CERAMIC
CF	CUBIC FEET
CI	CAST IRON
CJ	CONSTRUCTION JOINT
CL	CENTER LINE
CLG	CEILING
CLKG	CALKING
CLO	CLOSET
CLR	CLEAR
CMU	CONCRETE MASONRY UNIT
CNTR	COUNTER
COL	COLUMN
CONC	CONCRETE
CONN	CONNECTION
CONST	CONSTRUCTION
CONT	CONTINUOUS
CORR	CORRIDOR
CT	CERAMIC TILE
CTR	CENTER
CTSK	COUNTERSUNK
CY	CUBIC YARD
DBL	DOUBLE
DEPT	DEPARTMENT
DET	DETAIL
DF	DRINKING FOUNTAIN
DIA	DIAMETER
DIM	DIMENSION
DISP	DISPENSER
DN	DOWN
DO	DOOR OPENING
DR	DOOR
DS	DOWNSPOUT
DWG	DRAWING
E	EAST
EA	EACH
EJ	EXPANSION JOINT
EL	ELEVATION
ELEC	ELECTRICAL
ELEV	ELEVATOR
EMER	EMERGENCY
ENCL	ENCLOSURE
EQ	EQUAL
EQPT	EQUIPMENT
ESC	ESCALATOR
EW	EACH WAY
EXTG	EXISTING
EXP	EXPANSION
EXPO	EXPOSED
EXT	EXTERIOR
FA	FIRE ALARM
FB	FLAT BAR
FD	FLOOR DRAIN
FDN	FOUNDATION
FE	FIRE EXTINGUISHER
FG	FINISHED GRADE
FH	FIRE HYDRANT, FLAT HEAD
FHC	FIRE HOSE CABINET
FIN	FINISH
FL	FLOOR
FOC	FACE OF CONCRETE
FOF	FACE OF FINISH
FOS	FACE OF STUDS
FPRF	FIREPROOF
FS	FULL SIZE
FT	FOOT OR FEET
FTG	FOOTING
FURR	FURRING
FUT	FUTURE
GA	GAUGE
GAL	GALLON
GALV	GALVANIZED
GB	GYPSUM BOARD
GD	GRADE
GL	GLASS
GND	GROUND
GYP	GYPSUM
HB	HOSE BIBB
HDWE	HARDWARE
HM	HOLLOW METAL
HORIZ	HORIZONTAL
HP	HIGH POINT
HR	HOUR
HT	HEIGHT
HWY	HIGHWAY
ID	INSIDE DIAMETER
IE	INVERT ELEVATION
IN	INCHES
INSUL	INSULATION
INT	INTERIOR
JAN	JANITOR
JT(S)	JOINT(S)
LA	LANDSCAPE ARCHITECT
LAM	LAMINATE
LAV	LAVATORY
LC	LANDSCAPE CONTRACTOR
LF	LINEAL FEET
LKR	LOCKER
LP	LOW POINT
LT	LIGHT
LTG	LIGHTING
LWP	LOWER WORKING POINT
MAX	MAXIMUM
MECH	MECHANICAL
MEM	MEMBRANE
MET	METAL
MFR	MANUFACTURER
MH	MANHOLE
MIN	MINIMUM
MISC	MISCELLANEOUS
MO	MASONRY OPENING
MTD	MOUNTED
MUL	MULLION
N	NORTH
NIC	NOT IN CONTRACT
NO	NUMBER
NOM	NOMINAL
NTS	NOT TO SCALE
OA	OVERALL
OC	ON CENTER
OD	OUTSIDE DIAMETER
OPNG	OPENING
OPP	OPPOSITE
PABX	PRIVATE AUTOMATIC BRANCH EXCHANGE
PC	PRECAST CONCRETE
PL	PLATE
PLAS	PLASTER
P LAM	PLASTIC LAMINATE
PLYWD	PLYWOOD
PR	PAIR
PT	POINT
PTD/R	PAPER TOWEL DISPENSER & RECEPTACLE
PVC	POLYVINYL CHLORIDE
QT	QUARRY TILE
R	RISER/RADIUS
RB	RESILIENT BASE
RCP	REINFORCED CONCRETE PIPE
RD	ROOF DRAIN
REF	REFERENCE
REINF	REINFORCED
REQ	REQUIRED
RESIL	RESILIENT
REV	REVISION
RM	ROOM
RO	ROUGH OPENING
ROW	RIGHT OF WAY
RT	RESILIENT TILE
RWL	RAIN WATER LEADER
S	SOUTH OR SLOPE
SC	SOLID CORE
SCD	SEAT COVER DISPENSER
SCHED	SCHEDULE
SD	SOAP DISPENSER
SEC	SECTION
SF	SQUARE FEET
SHT	SHEET
SIM	SIMILAR
SND	SANITARY NAPKIN DISPENSER
SNR	SANITARY NAPKIN RECEPTACLE
SPEC	SPECIFICATION
SPKR	SPEAKER
SQ	SQUARE
ST STL	STAINLESS STEEL
SS	SERVICE SINK
STA	STATION
STD	STANDARD
STL	STEEL
STOR	STORAGE
STRL	STRUCTURAL
SUSP	SUSPENDED
SYM	SYMMETRICAL
T	TREAD
TC	TOP OF CURB
TD	TRENCH DRAIN
TEL	TELEPHONE
THK	THICK
TOC	TOP OF CONCRETE
TP	TOP OF PAVEMENT
TPD	TOILET PAPER DISPENSER
T/R	TOP OF RAIL
TV	TELEVISION
TVM(S)	TICKET VENDING MACHINE(S)
TW	TOP OF WALL
TYP	TYPICAL
UNF	UNFINISHED
UNO	UNLESS NOTED OTHERWISE
UWP	UPPER WORKING POINT
UR	URINAL
VCT	VINYL COMPOSITION TILE
VERT	VERTICAL
VEST	VESTIBULE
W	WEST
W/	WITH
WC	WATER CLOSET
WD	WOOD
W/O	WITHOUT
WP	WATERPROOF
WSP	WET STAND PIPE
WT	WEIGHT
WWF	WELDED WIRE FABRIC

SYMBOLS

REVISION
CLOUD AROUND REVISION — 5

WORK POINT, CONTROL POINT, OR DATUM POINT

NEW SPOT ELEVATION — 986.5

EXISTING SPOT ELEVATION — (986.5)

TOP OF WALL — TW 15.0

TOP OF CURB — TC 16.0

TOP OF PAVEMENT — TP 15.4

MATCH LINE

CENTER LINE

PROPERTY LINE

FENCE

DIMENSION TICK

LEADER ARROW

CONCRETE MASONRY UNIT OR BRICK

CONCRETE

EARTH

FINISHED STONE

COMPOSITE PANEL

INSULATION (BATT)

INSULATION (RIGID)

METAL

PLYWOOD

PRECAST CONCRETE

SAND, GROUT, MORTAR

TILE

COLUMN LINE — 1, A

ROOM IDENTIFICATION
ROOM NAME → JANITOR
ROOM NO → P02

DETAIL
DETAIL IDENTIFICATION → 4
DWG WHERE DETAIL IS DRAWN → AD20
REFERENCE BOUNDARY →

SECTION
SECTION IDENTIFICATION — A
DWG WHERE SECTION IS DRAWN → A / AD14

EXTERIOR ELEVATION(S)
ELEVATION ORIENTATION → N
DWG WHERE ELEVATION IS DRAWN → AD10

INTERIOR ELEVATION(S)
ELEVATION IDENTIFICATION → 1, 2, 3
DWG WHERE ELEVATION IS DRAWN → AD16

DOOR SYMBOL
FLOOR LEVEL/AREA → P
DOOR NO → 02

REV.	DATE	BY	CHKD.	APP.	DESCRIPTION
00	08/04				DRAWN PER BECO EM001151

THIS DRAWING IS INTENDED SOLELY FOR BART USE IN ORDER TO DESIGN, CONSTRUCT, ALTER, OR MAINTAIN ITS FACILITIES. BART DOES NOT RECOMMEND OR WARRANT USE OF THE DRAWING FOR ANY OTHER PURPOSE. USE OF THE DRAWING BEYOND THE INTENDED PURPOSE WILL BE AT USER'S OWN RISK.

LICENSED ARCHITECT — TIAN A. FENG — Exp. 9/06 — No. 25073 — STATE OF CALIFORNIA

BART

DESIGNED: | DATE:
DRAWN:
CHECKED:
APPROVED:

BART FACILITIES STANDARDS ARCHITECTURAL

ABBREVIATIONS AND SYMBOLS

REF. NO.
SIZE: D | SCALE: NONE
CONTRACT | REV. 00
SHEET NO. AS00 | PG. NO.

PLAN

SCALE: 1"=20'

NOTES:

1. FOR LEGEND, ABBREVIATIONS, AND GENERAL NOTES, SEE CONTRACT SHEET NO. AS00

LEGEND:

ADD ALTERNATE 1
REFLECTIVE PAINT APPLIED TO UNDERSIDE OF FREEWAY STRUCTURE AS SHOWN

20' 0' 20' 40'

GRAPHIC SCALE

REV.	DATE	BY	SUB	APP.	DESCRIPTION
1	20150811	JH	CK	CK	REISSUED FOR BID
P	20130628				ISSUED FOR BID

DESIGNED: J. STOCKHAM
DRAWN: C. ANGERS
CHECKED: Y. CHEN
APPROVED: C. KENT
DATE: 20130628

LICENSED LANDSCAPE ARCHITECT — CHRISTOPHER W. KENT — Expiration Date MAY 31, 2014 — Renewal Date JUNE 28, 2013 — STATE OF CALIFORNIA

SAN FRANCISCO BAY AREA RAPID TRANSIT DISTRICT

PGAdesign, INC.

SUBMITTED _____ APPROVED _____

MACARTHUR STATION PLAZA REPLACEMENT

REFLECTED CEILING PLAN

CADD FILENAME: A001.DWG
SIZE: D
SCALE: AS SHOWN
CONTRACT NO.: 17AJ-120
REV.: P
CONTRACT SHEET NO.: A001
PAGE NO.:

Jan 08, 2016 - 3:41pm F:\MacPlaza.OAK\DWG\Current Set-MacPlaza\A001.dwg
Hirsch

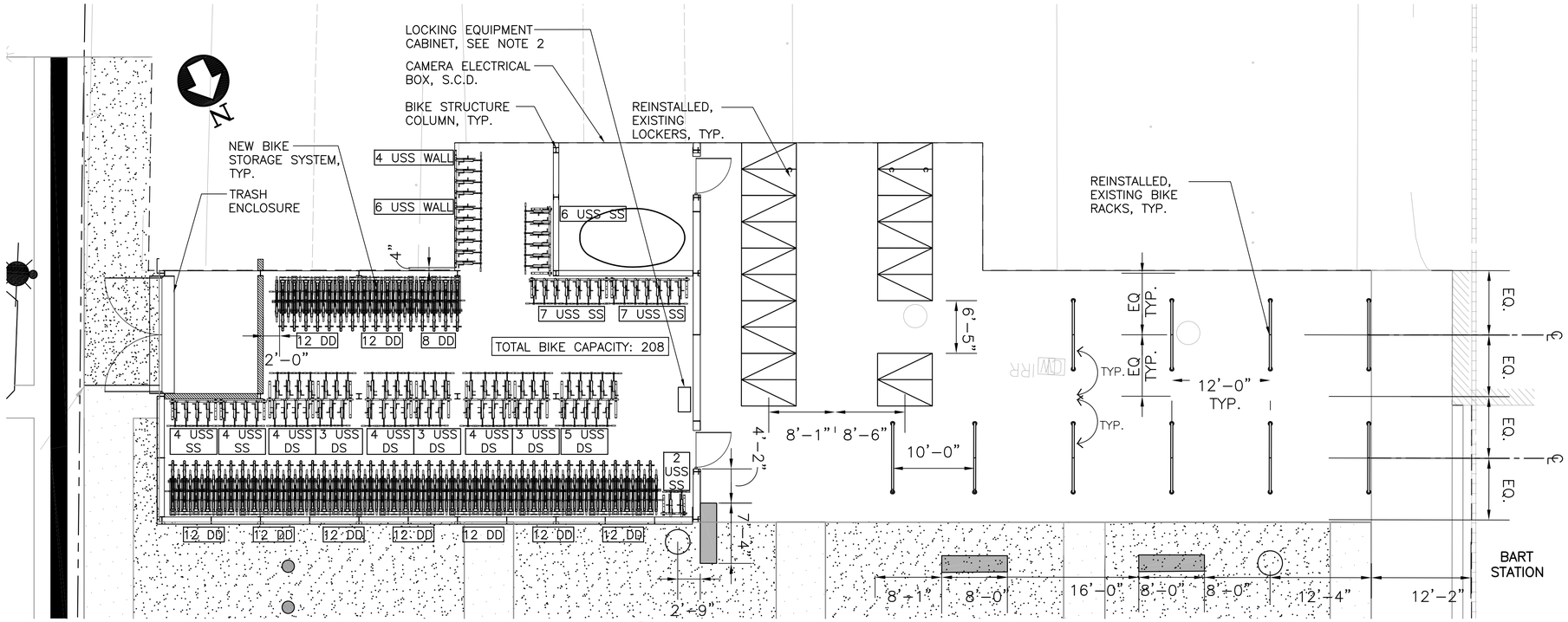

BIKE STATION LAYOUT PLAN (1 / A002)

SCALE: 1" = 8'-0"

NOTES:

1. FOR LEGEND, ABBREVIATIONS, AND GENERAL NOTES, SEE CONTRACT SHEET NO. AS00
2. LOCKING EQUIPMENT CABINET: SANDUSKY STAINLESS STEEL STORAGE CABINET W/PADDLE LOCK, 36"W X 18"D X 72"H; ITEM NO. T9FB592294. AVAILABLE FROM GLOBAL INDUSTRIAL; PH: 1.888.978.7759; GLOBALINDUSTRIAL.COM, OR APPROVED EQUIVALENT.

BIKE RACK LEGEND

DD:	DOUBLE DECK FLOOR MOUNT BIKE RACK
USS DS:	DOUBLE SIDED FLOOR MOUNT BIKE RACK
USS SS:	SINGLE SIDED FLOOR MOUNT BIKE RACK
USS WALL:	SINGLE SIDED WALL MOUNT BIKE RACK

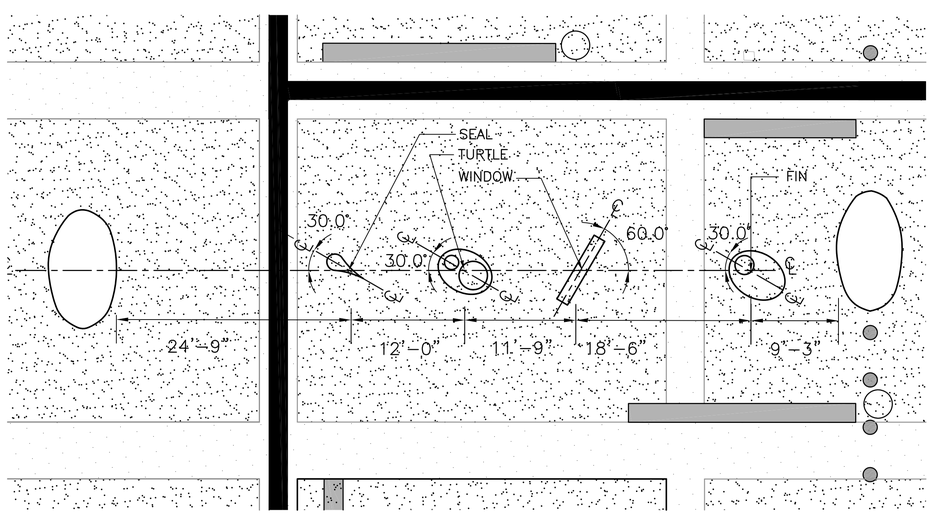

ARTWORK LAYOUT PLAN (2 / A002)

SCALE: 1" = 8'-0"

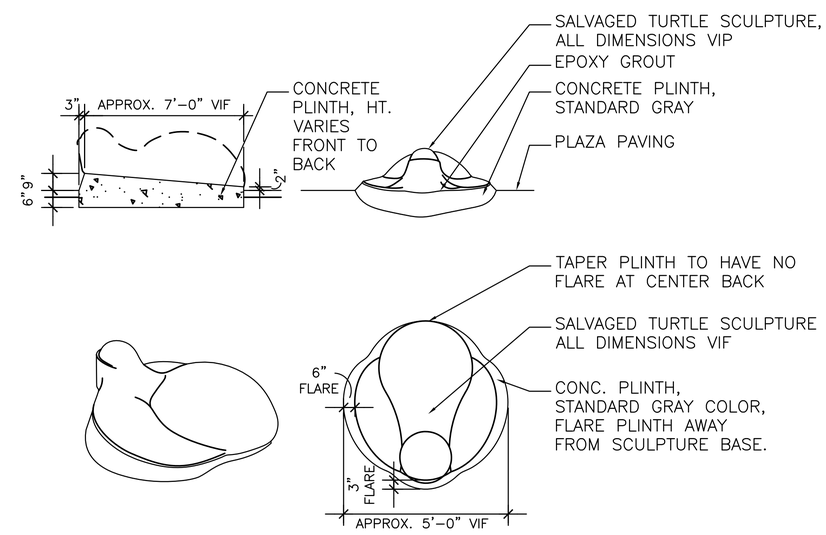

TURTLE BASE (3 / A002)

SCALE: 1"=10'-0"

REV.	DATE	BY	SUB	APP.	DESCRIPTION
2	20151211	JH	CK	CK	REISSUED FOR BID
1	20150811	JH	CK	CK	REISSUED FOR BID
P	20130628				ISSUED FOR BID

DESIGNED: J. STOCKHAM
DRAWN: C. ANGERS
CHECKED: Y. CHEN
APPROVED: C. KENT
DATE: 20130628

LICENSED LANDSCAPE ARCHITECT — CHRISTOPHER W. KENT — Expires MAY 31, 2014 — Renewal Date JUNE 28, 2013 — STATE OF CALIFORNIA

SAN FRANCISCO BAY AREA RAPID TRANSIT DISTRICT

PGAdesign, INC.

SUBMITTED _____ APPROVED _____

MACARTHUR STATION PLAZA ADDITIONS

LAYOUT DETAILS

CADD FILENAME: A002.DWG
SIZE: D — SCALE: AS SHOWN
CONTRACT NO.: 17AJ-120 — REV.: P
CONTRACT SHEET NO.: A002 — PAGE NO.:

hirsch Jan 08, 2016 - 3:44pm F:\MacPlaza OAK\DWG\Current Set-MacPlaza\A002.dwg

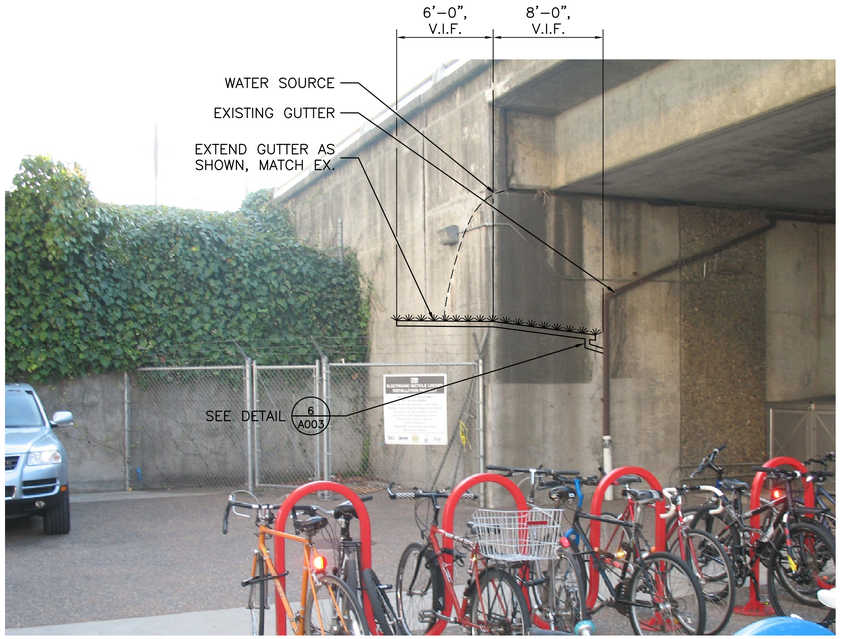

GUTTER ON ROUTE 24 FREEWAY WALL ABUTMENT (4 / A003)
SCALE: N.T.S.

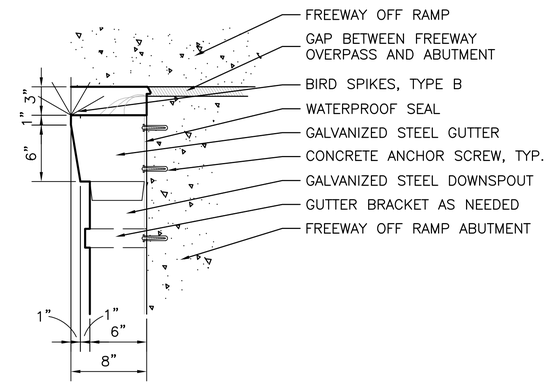

OFF RAMP GUTTER DETAIL SECTION (2 / A003)
SCALE: 1 1/2" = 1'-0"

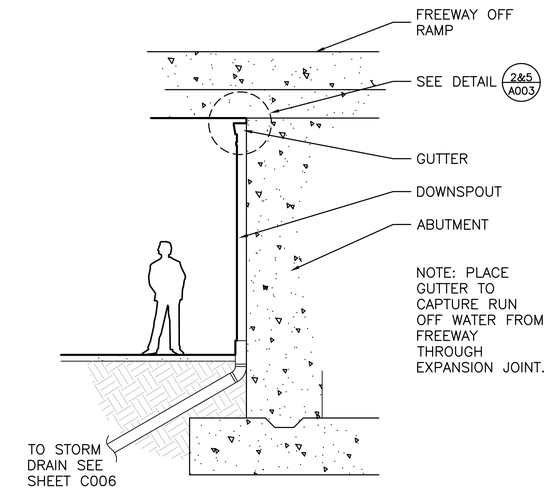

GUTTER ON OFF RAMP ABUTMENT WALL SECTION (1 / A003)
SCALE: 1/4" = 1'-0"

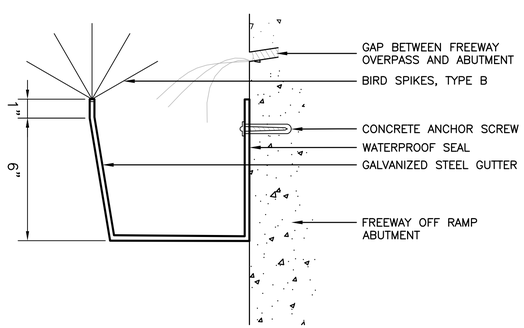

FREEWAY ABUTMENT GUTTER (5 / A003)
SCALE: 3" = 1'-0"

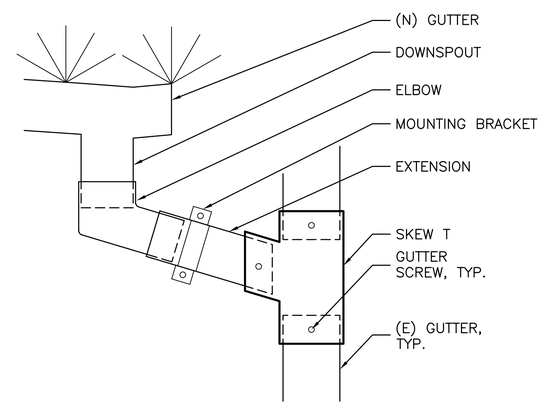

FREEWAY ABUTMENT GUTTER CONNECTION (6 / A003)
SCALE: 3" = 1'-0"

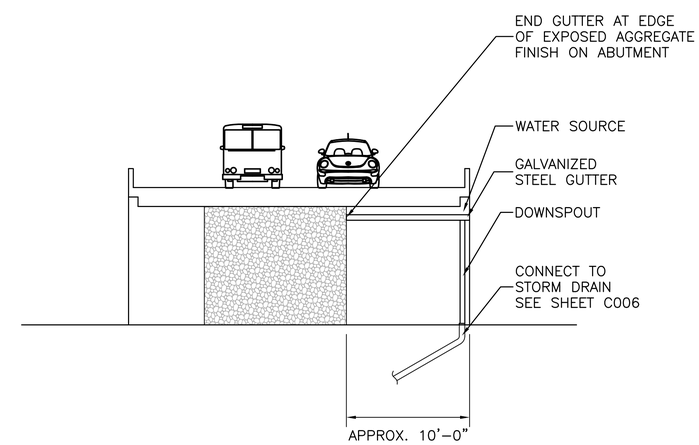

GUTTER ON OFF RAMP ABUTMENT WALL (3 / A003)
SCALE: 1" = 4'-0"

REV.	DATE	BY	SUB	APP.	DESCRIPTION
1	20150811	JH	CK	CK	REISSUED FOR BID
P	20130628				ISSUED FOR BID

DESIGNED: J. STOCKHAM
DRAWN: C. ANGERS
CHECKED: Y. CHEN
APPROVED: C. KENT
DATE: 20130628

LICENSED LANDSCAPE ARCHITECT — CHRISTOPHER M. KENT — MAY 31, 2014 — JUNE 28, 2013 — STATE OF CALIFORNIA

SAN FRANCISCO BAY AREA RAPID TRANSIT DISTRICT

PGAdesign, INC.

SUBMITTED _____ APPROVED _____

MACARTHUR STATION PLAZA REPLACEMENT

GUTTERS

CADD FILENAME: A003.DWG
SIZE: D | SCALE: AS SHOWN
CONTRACT NO.: 17AJ-120 | REV.: P
CONTRACT SHEET NO.: A003 | PAGE NO.:

Jan 08, 2016 – 3:47pm F:\MacPlaza.OAK\DWG\Current Set-MacPlaza\A003.dwg
Hirsch

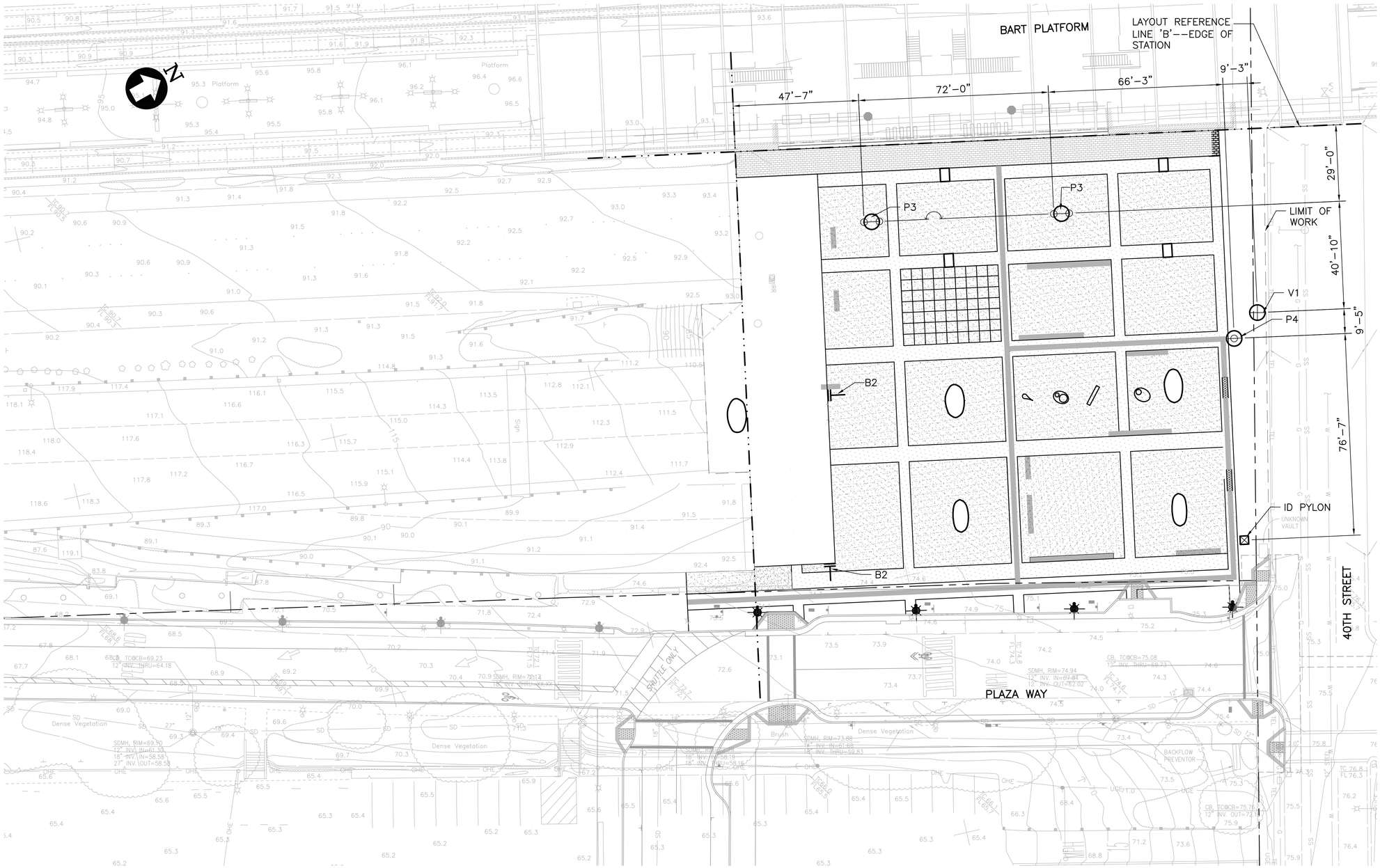

NOTES:

1. FOR LEGEND, ABBREVIATIONS, AND GENERAL NOTES, SEE CONTRACT SHEETS NO. CS50 AND CS51.
2. SEE SHEET A005 FOR SIGNAGE DESIGNATION TYPE.

LEGEND:

- WAYFINDING SIGN MOUNTED TO LIGHT POLE
- WAYFINDING SIGN, NEW POST
- WAYFINDING SIGN (FLAG) MOUNTED TO STRUCTURE
- 2-SIDED MAP KIOSK, LARGE 2-POST
- 2-SIDED MAP KIOSK, SMALL 1-POST
- BART IDENTITY PYLON (STANDARD SPEC 05 80 00) SEE SHEET E104
- (E) PLAZA COLUMNS

PLAN

SCALE: 1"=20'

20' 0' 20' 40'

GRAPHIC SCALE

REV.	DATE	BY	SUB	APP.	DESCRIPTION
1	20150811	JH	CK	CK	REISSUED FOR BID
P	20130628				ISSUED FOR BID

DESIGNED: J. STOCKHAM
DRAWN: C. ANGERS
CHECKED: Y. CHEN
APPROVED: C. KENT
DATE: 20130628

LICENSED LANDSCAPE ARCHITECT CHRISTOPHER W. KENT No. 4164 MAY 31, 2014 Renewal Date JUNE 28, 2013 Date STATE OF CALIFORNIA

SAN FRANCISCO BAY AREA RAPID TRANSIT DISTRICT

PGAdesign, INC.

SUBMITTED _____ APPROVED _____

MACARTHUR STATION PLAZA REPLACEMENT

SIGNAGE PLAN

CADD FILENAME: A004.DWG
SIZE: D
SCALE: 1"=20'-0"
CONTRACT NO.: 17AJ-120
REV.: P
CONTRACT SHEET NO.: A004
PAGE NO.:

jlirsch Jan 08, 2016 - 3:51pm F:\MacPlaza OAK\DWG\Current Set-MacPlaza\A004.dwg

NOTES:

1. FOR LEGEND, ABBREVIATIONS, AND GENERAL NOTES, SEE CONTRACT SHEETS NO. CS50 AND CS51.
2. SEE SHEET A005 FOR SIGNAGE LAYOUT.

P1
PEDESTRIAN WAYFINDING

P2
IDENTIFICATION SIGN

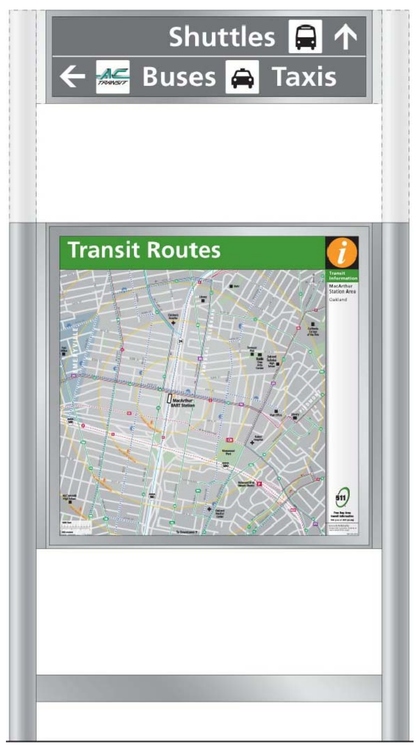

P3
DOUBLE–POST 2–SIDED MAP CASE

P4
SINGLE–POST KIOSK

B2
BICYCLE INFORMATION

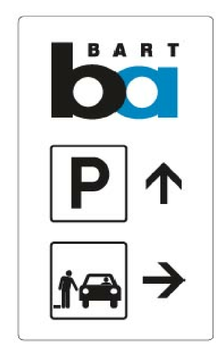

V1
VEHICULAR WAYFINDING

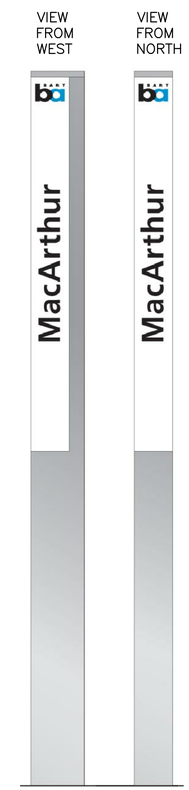

PYLON
BART ID

20' 0' 20' 40'
GRAPHIC SCALE

REV.	DATE	BY	SUB	APP.	DESCRIPTION	REV.	DATE	BY	SUB	APP.	DESCRIPTION
2	20151211	JH	CK	CK	REISSUED FOR BID						
1	20150811	JH	CK	CK	REISSUED FOR BID						
P	20130628				ISSUED FOR BID						

DESIGNED: J. STOCKHAM
DRAWN: C. ANGERS
CHECKED: Y. CHEN
APPROVED: C. KENT
DATE: 20130628

LICENSED LANDSCAPE ARCHITECT CHRISTOPHER W. KENT
MAY 31, 2014
Renewal Date
JUNE 28, 2013
Date
STATE OF CALIFORNIA

SAN FRANCISCO BAY AREA RAPID TRANSIT DISTRICT

PGAdesign, INC.

SUBMITTED _____ APPROVED _____

MACARTHUR STATION PLAZA REPLACEMENT

SIGNAGE DETAILS

CADD FILENAME A005.DWG
SIZE: D SCALE NTS
CONTRACT NO. 17AJ-120 REV. P
CONTRACT SHEET NO. A005 PAGE NO.

jlirsch Jan 08, 2016 – 3:55pm F:\MacPlaza OAK\DWG\Current Set–MacPlaza\A005.dwg

(1) (E) PANEL L5

ELECT SUBSTATION RM

DESCRIPTION	LOAD (KVA) LTG.	REC.	RES.	MOT.	CB	CKT	SN	CKT	CB	LOAD (KVA) LTG.	REC.	RES.	MOT.	DESCRIPTION
(E) PARKING AREA LIGHTING	1.84				20/1	1	*	2	20/1	1.20				(E) LOGO
(E) PARKING AREA LIGHTING	1.38				20/1	3	*	4	20/1	1.05				(E) LOGO
(E) PARKING AREA LIGHTING	1.84				20/1	5	*	6	20/1	1.07				(E) LOGO
(E) LOGO SIGN	1.20				20/1	7	*	8	20/1	5.40				(E) 40TH ST & PLAZA LTG
(E) LOGO SIGN	1.20				20/1	9	*	10	20/1	5.40				(E) 40TH ST & PLAZA LTG
(E) LOGO SIGN					20/1	11	*	12	20/1					(N) PLAZA LTG ✳✳
(E) LOGO SIGN	1.20				20/1	13	*	14	20/1					(N) PLAZA LTG ✳✳
(E) SPARE					20/1	15	*	16	20/1					(N) PLAZA LTG ✳✳
(E) PARKING AREA LIGHTING	1.38				20/1	17	*	18	20/1	1.84				(E) PARKING AREA LIGHTING
(E) PARKING AREA LIGHTING	0.92				20/1	19	*	20	20/1	2.00				(E) SPARE
(E) FRONTAGE RD LIGHTING	3.00				20/1	21	*	22	20/1	2.40				(E) SPARE
(E) FRONTAGE RD LIGHTING	3.00				20/1	23	*	24	20/1	2.40				(E) SPARE
						25	*	26						
						27	*	28						
						29	*	30						
						31	*	32						
						33	*	34						
						35	*	36						
						37	*	38						
						39	*	40						
						41	*	42						
TOTAL	16.96									22.76				

VOLTS: 277/480V,3ø,4W MTG:
BUS: TYPE: CONNECTED KVA: 39.72
MAIN: 100A KAIC: CONNECTED AMPS: 47.80

✳ EXISTING SPLIT BUS INTERIOR IN EXISTING ENCLOSURE BETWEEN CIRCUITS 1 THROUGH 16 AND 17 THROUGH 24 IN EXISTING PANEL.

✳✳ EXISTING CIRCUITS TO BE RE-USED FOR NEW LIGHTING. VERIFY ALL CIRCUITRY.

(1) (E) PANEL L1

ELECT SUBSTATION RM

DESCRIPTION	LOAD (KVA) LTG.	REC.	RES.	MOT.	CB	CKT	SN	CKT	CB	LOAD (KVA) LTG.	REC.	RES.	MOT.	DESCRIPTION
						1	*	2	20/1					SPARE
TRANSFORMER X11			30.00		70/3	3	*	4	20/1					SPARE
						5	*	6	20/1					SPARE
CORRIDOR, T/C RM LIGHTS	2.90				20/1	7	*	8	20/1	3.20				CONCOURSE LIGHTS
STORAGE,BATTERY,T/C RM LIGHTS	2.80				20/1	9	*	10	20/1	3.10				CONCOURSE LIGHTS
ENTRANCE LIGHTS	2.80				20/1	11	*	12	20/1	2.80				CONCOURSE LIGHTS
ENTRANCE LIGHTS	2.50				20/1	13	*	14	20/1	3.10				CONCOURSE LIGHTS
ENTRANCE LIGHTS	2.80				20/1	15	*	16	20/1	3.10				CONCOURSE LIGHTS
ENTRANCE LIGHTS	2.50				20/1	17	*	18	20/1	3.00				CONCOURSE LIGHTS
SUBSTATION LIGHTING	2.50				20/1	19	*	20	20/1	0.30				SIGN
SUBSTATION SWBD RM LIGHTS	2.10				20/1	21	*	22	20/1	0.50				SIGN
PLAZA LIGHTS	1.50				20/1	23	*	24	20/1	0.20				SIGN
SPACE						25	*	26	20/1	1.00				SIGN (ENTRANCE)
SPACE						27	*	28	20/1	1.00				SIGN (ENTRANCE)
SPACE						29	*	30	20/1					SPARE
						31	*	32						
						33	*	34						
						35	*	36						
						37	*	38						
						39	*	40						
						41	*	42						
TOTAL	22.40		30.00							21.30				

VOLTS: 277/480V,3ø,4W MTG:
BUS: TYPE: CONNECTED KVA: 73.70
MAIN: 225A KAIC: CONNECTED AMPS: 88.69

SHEET NOTES

(1) EXISTING PANELBOARDS SHALL BE PROVIDED WITH NEW TYPEWRITTEN DIRECTORIES TO IDENTIFY THE LOCATION OF EACH LOAD SERVED. COORDINATE WITH BART.

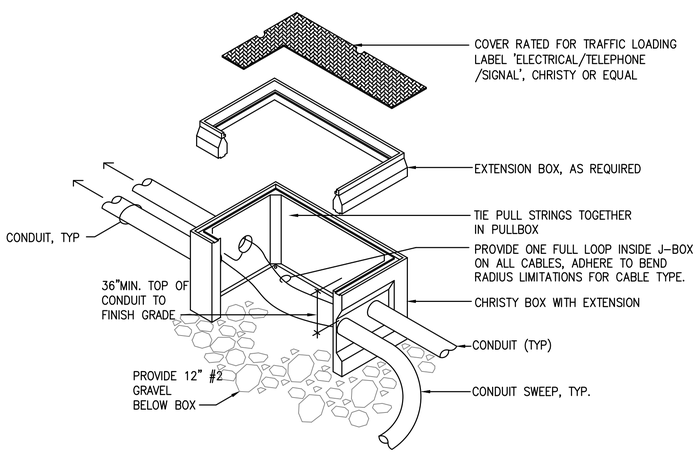

NOTE:
CONDUIT DEPTHS SHALL CONFORM TO BFS STANDARDS. SEE DETAIL 2/ES77.

(1) TYPICAL UNDERGROUND PULLBOX

NOT TO SCALE

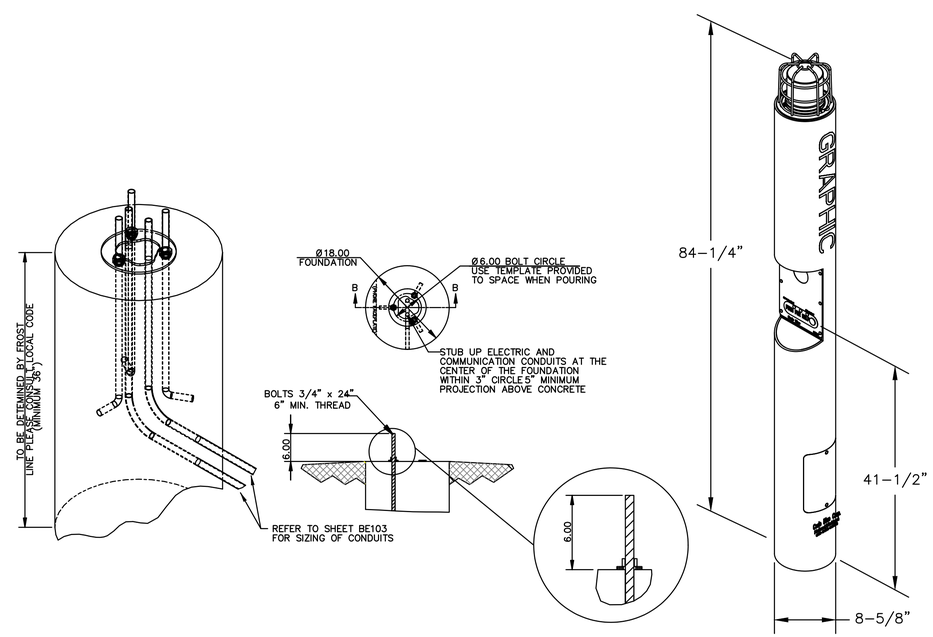

(2) EMERGENCY CALL BOX MOUNTING DETAIL

NOT TO SCALE

LIGHTING

JUNCTION BOX SIZED PER N.E.C.

PARKING LIGHT STANDARD

SECURITY SYSTEM

FIX — CAMERA FIXED

PTZ — CAMERA PAN/TILT-ZOOM

CAMERAS MOUNTED ON POLE WITH JUNCTION BOX AND PULL BOX

TELEPHONE SYSTEM

EMERGENCY TELEPHONE (EMERGENCY CALL BOX)

RECEPTACLE

DUPLEX RECEPTACLE 120V, 20A, 3W GROUNDING AT +24" U.O.N.

GFI — GROUND FAULT CIRCUIT INTERRUPTER, +18" U.O.N.

CONDUITS

CONDUIT UP

CONDUIT DOWN

EXISTING CONDUIT – SEE SHEET NOTES FOR ADDITIONAL REQUIREMENTS

CONDUIT CONCEALED IN WALL OR CEILING

CONDUIT CONCEALED IN FLOOR OR SLAB

HOMERUN TO PANELBOARD OR OTHER TERMINATION POINT

ANY BRANCH CIRCUIT CONDUIT SHALL BE MINIMUM 1/2"C – 2#10 UNLESS OTHERWISE NOTED OR INDICATED. FOR A GREATER QUANTITY OF WIRES: —HH— = 3/4"C–3#10) ETC. FOR WIRE SIZES OTHER THAN #10: —HH— #8 = 3#8 IN CODE SIZE CONDUIT) ETC.

SPECIAL IDENTIFICATION

(E)	EXISTING
(G)	GROUND
G.F.I.	GROUND FAULT INTERRUPTER
MT	EMPTY CONDUIT WITH PULL CORD
RPS	REMOTE POWER SUPPLY
T.S.	TIME SWITCH
TYP.	TYPICAL
U.O.N.	UNLESS OTHERWISE NOTED
WP	WEATHERPROOF

REV.	DATE	BY	SUB	APP.	DESCRIPTION
1	20150811				REISSUED FOR BID
P	20130628				ISSUED FOR BID

DESIGNED: SCH/TK
DRAWN: DM
CHECKED: C. KENT
APPROVED: C. KENT
DATE: 20130105

REGISTERED PROFESSIONAL ENGINEER JOSE L. NIE No. E 17369 Exp. 9-30-16 ELECTRICAL STATE OF CALIFORNIA

SAN FRANCISCO BAY AREA RAPID TRANSIT DISTRICT

WHM INC. — SUBMITTED

PGAdesign, INC. — APPROVED

MACARTHUR BART PLAZA REPLACEMENT

SYMBOLS, SCHEDULES AND DETAILS

CADD FILENAME: E001.DWG
SIZE: D SCALE: NONE
CONTRACT NO. 17AJ-120 REV. P
CONTRACT SHEET NO. E001 PAGE NO. -

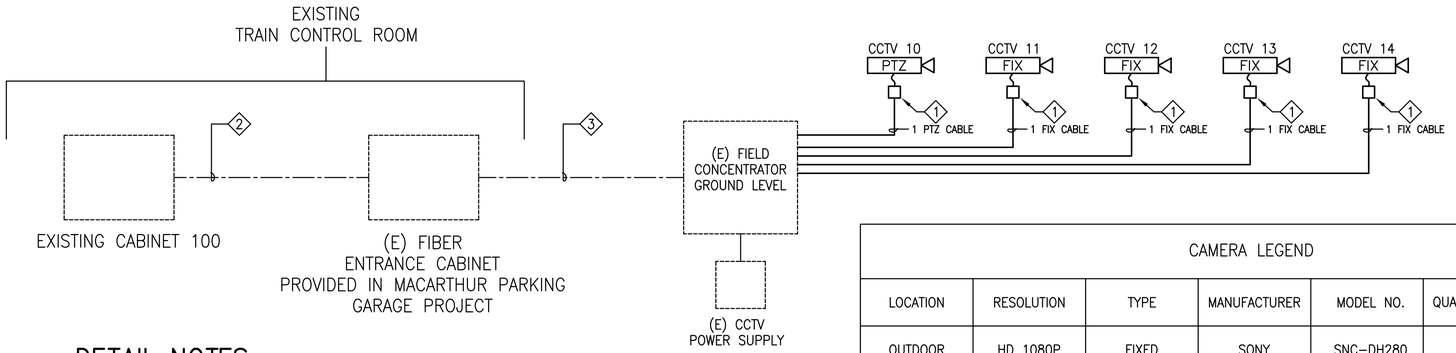

CAMERA LEGEND						
LOCATION	RESOLUTION	TYPE	MANUFACTURER	MODEL NO.	QUANTITY	REMARKS
OUTDOOR	HD 1080P	FIXED	SONY	SNC-DH280	4	NO WIDE-DYNAMIC
OUTDOOR	HD 1080P	PAN/TILT/ZOOM	SONY	SNC-ER580	1	

DETAIL NOTES:

1. POLE MOUNTED JUNCTION BOX WITH CAMERA DISTRIBUTION EQUIPMENT. SEE ELEVATIONS AND DETAILS.
2. EXISTING 1" WITH 24M.M 50um FIBER OPTIC CABLES TO EXISTING CABINET 100 IN EXISTING TRAIN CONTROL ROOM K30 AT EXISTING MACARTHUR STATION FROM EXISTING FIBER ENTRANCE CABINET IN TRAIN CONTROL ROOM K30 AT EXISTING MACARTHUR STATIONN. SEE SITE PLANS.
3. EXISTING 2" CONDUIT WITH 24M.M 50um FIBER OPTIC CABLES FROM EXISTING FIELD CONCENTRATOR CABINET IN PLAZA TO EXISTING FIBER ENTRANCE CABINET IN EXISTING TRAIN CONTROL ROOM K30 AT EXISTING MACARTHUR STATION. SEE SITE PLAN.

NOTES:

1. FIXED AND PAN/TILT/ZOOM CAMERAS TO BE SELECTED BY BART.
2. ALL CABLES FOR FIXED AND PAN/TILT/ZOOM CAMERAS SHALL BE MANUFACTURED BY BERK-TEK.

CAMERA LEGEND NOTES

1. ALL LISTED PTZ CAMERAS REQUIRE A VANDAL RESISTANT ENCLOSURE, E.G., DOTWORKZ D2 OR D3.
2. THE DH280 COMES WITH A BUILT IN IR ILLUMINATOR.
3. SEE SHEET E103 FOR LOCATION OF SNC-DH280 CAMERAS.
4. VERIFY CAMERAS AND PART NUMBERS WITH BART.

GENERAL NOTE

1. SEE BART FACILITIES STANDARDS SPECIFICATIONS 27 30 01 TELEPHONE SYSTEMS.
2. ALL PHONES SHALL BE TESTED BY BART.
3. PROTECTOR BLOCK AND CABLES REQUIRE SHIELD TERMINATION PER TIA 607 (BONDING AND GROUNDING).

COMMUNICATION GENERAL NOTES

1. CAT 6A (F/UTP) CABLES
   A. PROVIDE CAT 6A F/UTP CABLES AS SHOWN ON DESIGNED DRAWINGS.
   B. THE CABLE MINIMUM BENDING RADIUS SHALL BE MANUFACTURER'S STANDARD INSIDE ENCLOSURE, PULL BOX, CABLE TRAY AND CABLE TRENCH.
   C. CABLE LOOP SERVICE OF AT LEAST 1 FULL LOOP SHALL BE PROVIDED INSIDE DESIGNATED GUTTERS OR PULL BOXES.
2. FIBER OPTIC CABLES
   A. PROVIDE 50 MICRON OM4 RATED.
   B. THE CABLE MINIMUM BENDING RADIUS SHALL BE MANUFACTURER'S STANDARD INSIDE ENCLOSURE, PULL BOX, CABLE TRAY AND CABLE TRENCH.
   C. CABLE LOOP SERVICE OF AT LEAST 1 FULL LOOP SHALL BE PROVIDED INSIDE DESIGNATED GUTTERS OR PULL BOXES.
3. OCA CABLES
   A. PROVIDE COMPOSITE CABLES WITH COMBINED OPTICAL FIBER AND COPPER CONDUCTORS. CABLES SHALL BE BERK-TEK ONE REACH CABLE ASSEMBLY OR EQUAL.
4. PIN FERRULES SHALL BE PROVIDED FOR ALL WIRE ENDS TERMINATION TO TERMINAL BLOCKS.
5. USE VELCRO STRAPS FOR SECURING AND MANAGING CAT AND FIBER CABLES. NYLON CABLE TIES ARE NOT PERMITTED.
6. USE WIRE TO SECURE CONDUIT TAGS. NYLON CABLE TIES ARE NOT PERMITTED.
7. CONDUITS
   A. THE CONDUIT SIZE SHALL BE AS INDICATED IN THE DESIGN DRAWINGS.
   B. THE CONDUIT MOUNTED ON EXPOSED WALLS AND ABOVE GRADE SHALL BE HOT DIPPED GALVANIZED STEEL AS SPECIFIED.
   C. CONDUITS SHALL BE SUPPORTED PHYSICALLY EVERY 10 FEET SPACING.
   D. CONDUIT RUNS FOR FIBER OPTIC CABLES SHALL ONLY USE PULL BOXES AND RADIUSED BENDS. CONDUIT BODIES NOT PERMITTED.
   E. ALL CONDUIT RUNS PASSING THROUGH CORE DRILLED HOLES OR OPENINGS SHALL BE FIRE SEALED.
   F. ALL CONDUITS AND/OR CONDUIT NIPPLES CONNECTED TO THE FC, PS, PDP, JUNCTION BOXES AND GUTTER SHALL BE TERMINATED WITH ISOLATED COUPLERS AND REUSABLE FIRE STOP.

1 CCTV RISER DIAGRAM

NOT TO SCALE

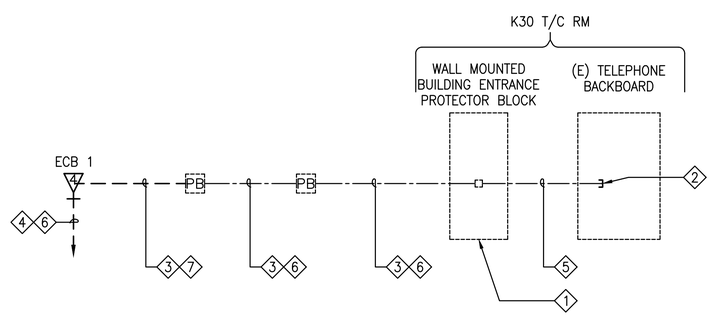

DETAIL NOTES

1. EXISTING WALL MOUNTED BUILDING ENTRANCE PROTECTOR BLOCK LOCATED NEAR EXISTING TELEPHONE BACKBOARD (REFER TO DRAWING BE103).
2. EXISTING PHONE LINE. VERIFY WITH REQUIREMENTS WITH BART.
3. OUTSIDE PLANT CABLES SHALL USE 4 PAIRS, 19AWG SOLID, SOFT-ANNEALED, INSULATED COPPER CONDUCTOR, WITH AN OVERALL SHIELD THAT MEET THE REQUIREMENTS OF REA SPECIFICATION PE-39 FILLED TELEPHONE CABLES.
4. PROVIDE AND INSTALL 120V POWER CONDUCTORS FOR EMERGENCY CALL BOX. SEE DRAWING E102.
5. CAT 6 CABLES TO BE PROVIDED AND INSTALLED BY CONTRACTOR.
6. EXISTING UNDERGROUND CONDUITS PROVIDED UNDER MTV SITE DEVELOPMENT STAGE B. VERIFY ROUTING AND SIZE OF CONDUITS.
7. PROVIDE NEW UNDERGROUND CONDUIT FROM PULLBOX TO NEW EMERGENCY CALLBOX.

SCOPE OF WORK

1. ELECTRICAL CONTRACTOR SHALL PROVIDE NEW PLAZA LIGHTING PER SITE PLAN. UNDERGROUND JOINT TRENCH CONDUITS WERE PROVIDED MTV SITE DEVELOPMENT STAGE B CONTRACT. VERIFY ROUTING AND SIZE OF CONDUITS. NEW POWER CONDUCTORS SHALL BE PROVIDED AND INSTALLED.

2. ELECTRICAL CONTRACTOR SHALL PROVIDE NEW EMERGENCY CALL BOX. VERIFY IN THE FILED THAT PROVISIONS HAVE BEEN MADE FOR NEW EMERGENCY CALL BOX. EMERGENCY CALL BOXES, POWER CONDUCTORS AND SIGNAL CABLES SHALL BE PROVIDED FOR A COMPLETE WORKING SYSTEM IN COMPLIANCE WITH BART STANDARDS AND SPECIFICATIONS.

3. ELECTRICAL CONTRACTOR SHALL PROVIDE 120V POWER FOR MAP KIOSK. VERIFY LOCATIONS WITH LANDSCAPE ARCHITECT AND BART. VERIFY REQUIREMENTS WITH BART BFS STANDARDS AND SPECS. COORDINATE INSTALLATION REQUIREMENTS OF MAP KIOSK SYSTEM WITH MANUFACTURER.

4. ELECTRICAL CONTRACTOR SHALL PROVIDE AND INSTALL NEW A COMPLETELY TESTED, FUNCTIONAL AND OPERATIONAL NETWORK CCTV SECURITY SYSTEM. ELECTRICAL CONTRACTOR TO VERIFY IN FIELD EXISTING FIELD CONCENTRATOR CABINET 'FCR' AND POWER SUPPLY CAPACITY FOR NEW CCTV CAMERAS. CONDUITS AND CABLES SHALL BE INSTALLED IN ACCORDANCE WITH CONTRACT SPECIFICATIONS AND DESIGNED DRAWINGS. PARTS INCLUDE AND ARE NOT LIMITED TO:
   a. CCTV SECURITY CAMERAS
   b. CCTV SECURITY CAMERA POLES WITH POLE BASES
   c. CCTV SECURITY JUNCTION BOXES
   d. CCTV SIGNAL CABLES INCLUDING CAT6A F/UPT, FIBER OPTIC AND BERK-TEK OCA CABLES
   e. CCTV PARTS LIST ON E004.

2 TELEPHONE RISER DIAGRAM

NOT TO SCALE

REV.	DATE	BY	SUB	APP.	DESCRIPTION	REV.	DATE	BY	SUB	APP.	DESCRIPTION
1	20150811				REISSUED FOR BID						
P	20130628				ISSUED FOR BID						

DESIGNED: SCH/TK
DRAWN: DM
CHECKED: C. KENT
APPROVED: C. KENT
DATE: 20130105

REGISTERED PROFESSIONAL ENGINEER JOSE L. NE No. E 17369 Exp. 9-30-16 ELECTRICAL STATE OF CALIFORNIA

SAN FRANCISCO BAY AREA RAPID TRANSIT DISTRICT

WHM INC. — SUBMITTED

PGAdesign, INC. — APPROVED

MACARTHUR BART PLAZA REPLACEMENT

ELECTRICAL DETAILS AND DIAGRAMS

CADD FILENAME: E002.DWG
SIZE: D | SCALE: NONE
CONTRACT NO.: 17AJ-120 | REV.: P
CONTRACT SHEET NO.: E002 | PAGE NO.: 146

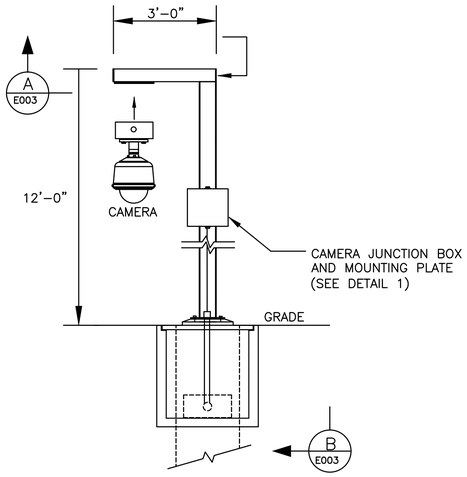

FRONT ELEVATION

SINGLE CAMERA

CCTV MOUNTING SUPPORT DETAIL

N.T.S.

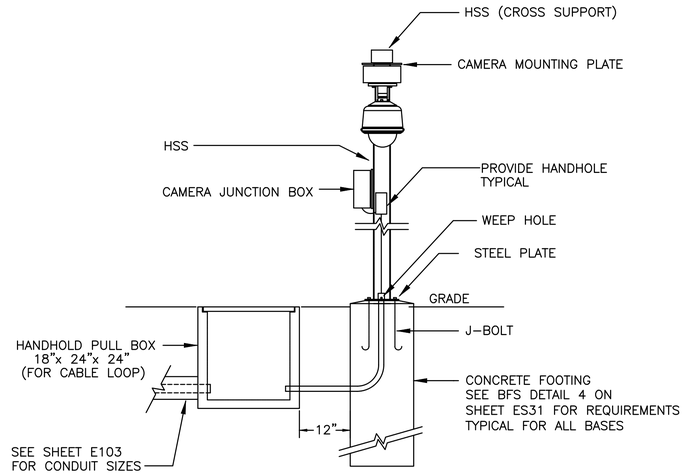

SECTION B E003

N.T.S.

NOTES:

1. REFER TO SPEC. SECTION 28 14 29 FOR JUNCTION BOX INSTALLTION.
2. ALL STRUCTURAL STEEL MEMBERS AND CONNECTIONS SHALL BE HOT DIPPED GALVANIZED.
3. PLATES SHALL CONFORM TO ASTM A36. HSS MEMBERS SHALL CONFORM TO ASTM A500 GRADE B. ALL BOLTS INCLUDING J-BOLTS SHALL CONFORM TO ASTM A307 AND PROVIDED WITH WASHERS.
4. FOOTING CONCRETE SHALL BE NORMAL WEIGHT WITH ULTIMATE COMPRESSIVE STRENGTH AT 28 DAYS OF F'c=4,000 PSI.
5. ALL STRUCTURAL WELDED CONNECTIONS SHALL BE MADE USING ELECTRODES CONFORMING TO AWS A5.1 OR A5.5, E70XX.
6. TERMINATION TO CAMERA J-BOX SHALL BE PROVIDED WITH ISOLATED COUPLER.
7. FOR JUNCTION BOX DETAILS, SEE DWG E010.
8. COORDINATE MOUNTING OF CAMERAS ON STEEL FENCE WITH STRUCTURAL AND LANDSCAPE ARCHITECT.

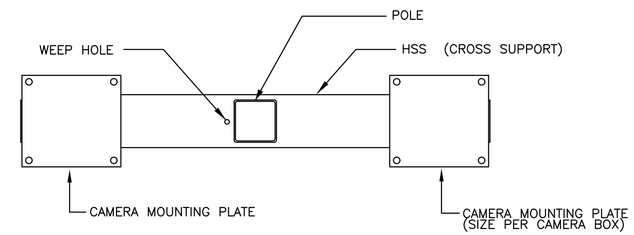

SECTION A E003

N.T.S.

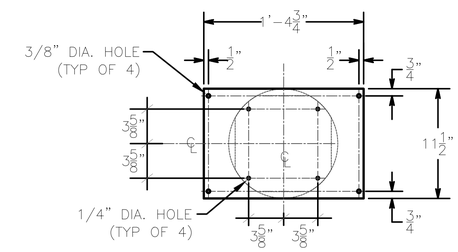

FIBERGLASS PLATE DETAIL

(PTZ CAMERA)

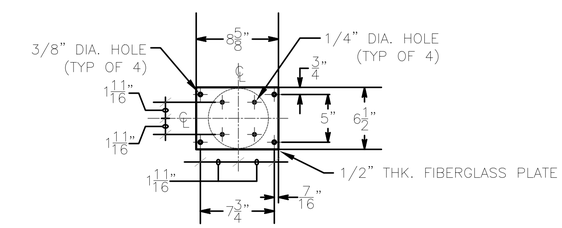

FIBERGLASS PLATE DETAIL

(FIXED CAMERA)

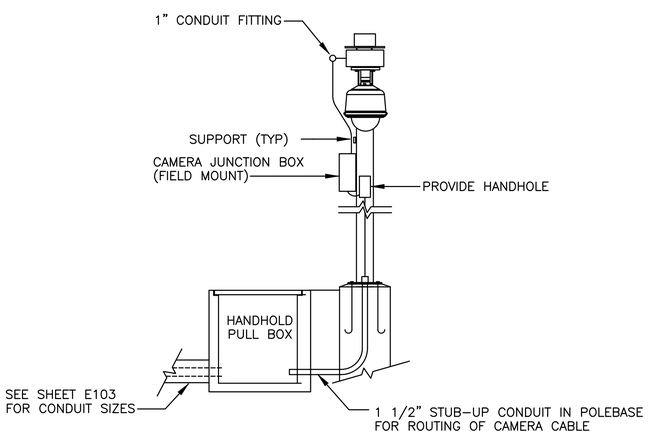

CCTV CONDUIT DETAIL

N.T.S.

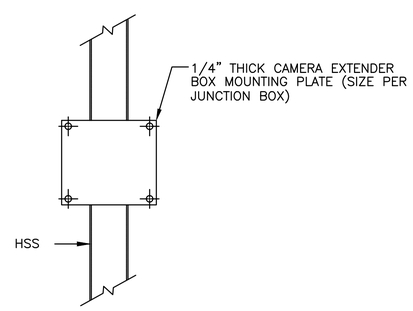

DETAIL-1

N.T.S.

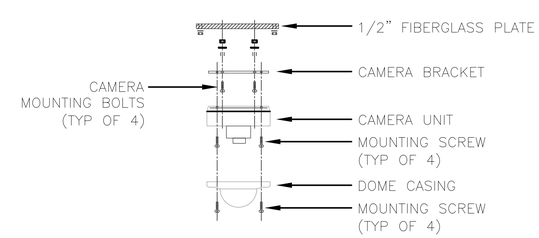

DETAIL-2

CAMERA ASSEMBLY DETAIL

N.T.S.

REV.	DATE	BY	SUB	APP.	DESCRIPTION	REV.	DATE	BY	SUB	APP.	DESCRIPTION
1	20150811				REISSUED FOR BID						
P					ISSUED FOR BID						

DESIGNED: SCH/TK
DRAWN: DM
CHECKED: C. KENT
APPROVED: C. KENT
DATE: 20130105

REGISTERED PROFESSIONAL ENGINEER JOSE L. NG No. E 17369 Exp. 9-30-16 ELECTRICAL STATE OF CALIFORNIA

SAN FRANCISCO BAY AREA RAPID TRANSIT DISTRICT

WHM INC. — SUBMITTED

PGAdesign, INC. — APPROVED

MACARTHUR BART PLAZA REPLACEMENT

UNIFIED OPTICAL NETWORK
FIELD CONCENTRATOR SYSTEM
TYPICAL CAMERA MOUNTING DIAGRAM

CADD FILENAME: E003.DWG
SIZE: D
SCALE: NONE
CONTRACT NO.: 17AJ-120
REV.: P
CONTRACT SHEET NO.: E003
PAGE NO.: -

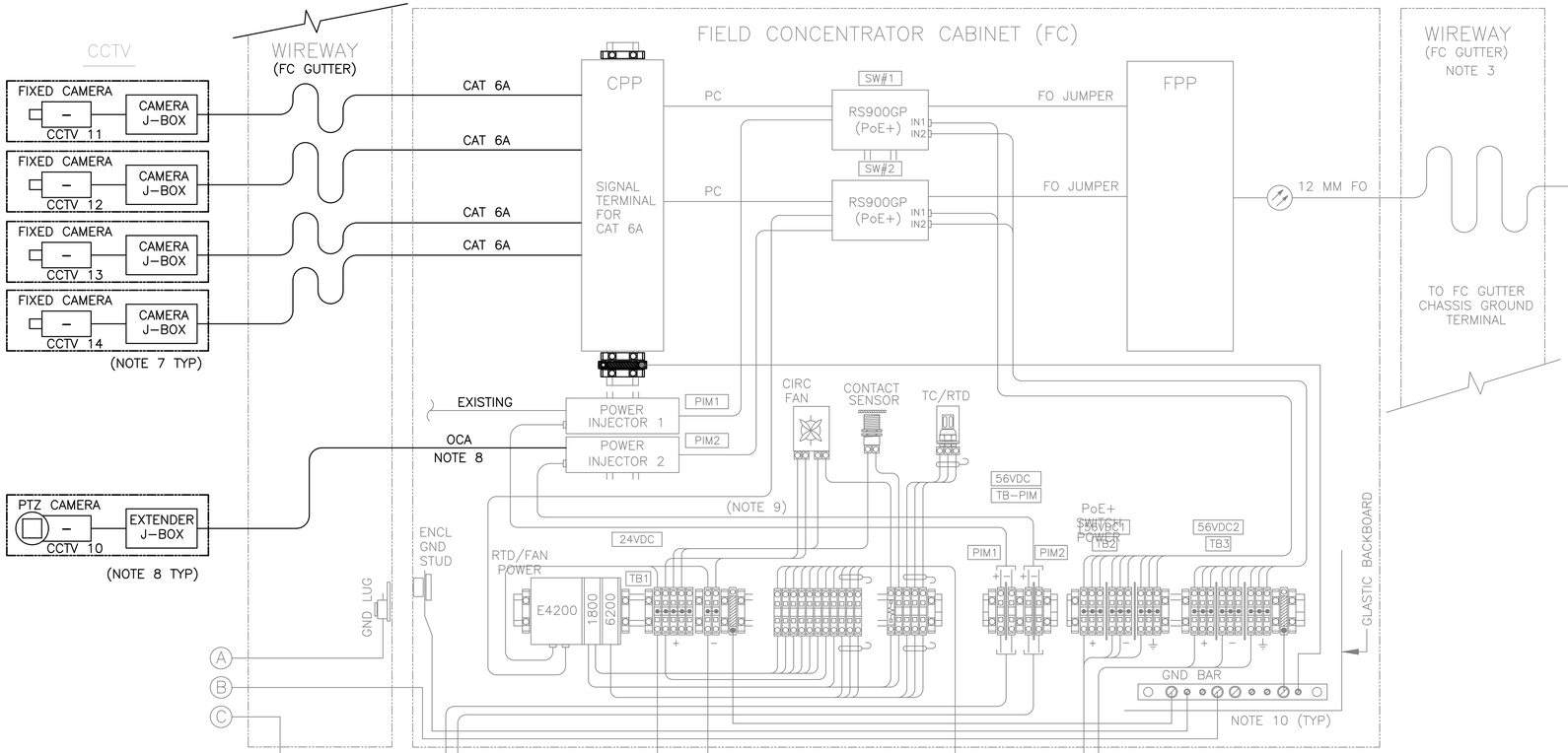

NOTES:

1. FOR GENERAL NOTES, SEE DWG E002.
2. FIELD CONCENTRATOR (FC) TYPICAL WIRING INTERFACE WITH CCTV SYSTEM AND POWER SUPPLY.
3. WIREWAY WILL SERVE AS THE CABLE MANAGEMENT BOX FOR COPPER CABLE CAT6A AND I/C CABLE.
4. FOR BLOCK DIAGRAM, SEE FRONTAGE RD DRAWINGS.
5. FOR WIRING HARNESSING SEE FRONTAGE RD DRAWINGS.
6. FOR FC AND POWER SUPPLY ASSEMBLY LAYOUT, SEE FRONTAGE RD DRAWINGS.
7. FOR TYPICAL CAMERA J-BOX ASSEMBLY AND WIRING DETAIL, SEE DWG E010.
8. USE COMPOSITE COPPER/FIBER CABLE (OCA) WITH POWER INJECTOR AND REMOTE PoE MODULES, FOR ALL CAMERA WITH EXTENDER.
9. POWER SUPPLY CABLE TO POWER INJECTOR MODULE SHALL BE 2C #12AWG, MAXIMUM 15 FEET LONG.

NOTE:

FIELD CONCENTRATOR CABINET 'FCR', POWER SUPPLY, ISOLATION TRANSFORMER, ETC ARE EXISTING. CCTV SYSTEM INSTALLED IN FRONTAGE RD CONSTRUCTION PHASE. ELECTRICAL CONTRACTOR TO VERIFY ALL CCTV EQUIPMENT FOR A COMPLETE OPERATING SYSTEM PRIOR TO BID. COORDINATE ALL MODIFICATIONS TO THE CCTV SYSTEM WITH BART.

REV.	DATE	BY	SUB	APP.	DESCRIPTION
1	20150811				REISSUED FOR BID
P					ISSUED FOR BID

DESIGNED: SCH/TK
DRAWN: DM
CHECKED: C. KENT
APPROVED: C. KENT
DATE: 20130105

REGISTERED PROFESSIONAL ENGINEER JOSE L. NE No. E 17369 Exp. 9-30-16 ELECTRICAL STATE OF CALIFORNIA

SAN FRANCISCO BAY AREA RAPID TRANSIT DISTRICT

WHM INC. — SUBMITTED

PGAdesign, INC. — APPROVED

MACARTHUR BART PLAZA REPLACEMENT

CCTV SECURITY SYSTEM WIRING INTERFACE

CADD FILENAME: E008.DWG
SIZE: D — SCALE: NONE
CONTRACT NO.: 17AJ-120 — REV.: P
CONTRACT SHEET NO.: E008 — PAGE NO.: -

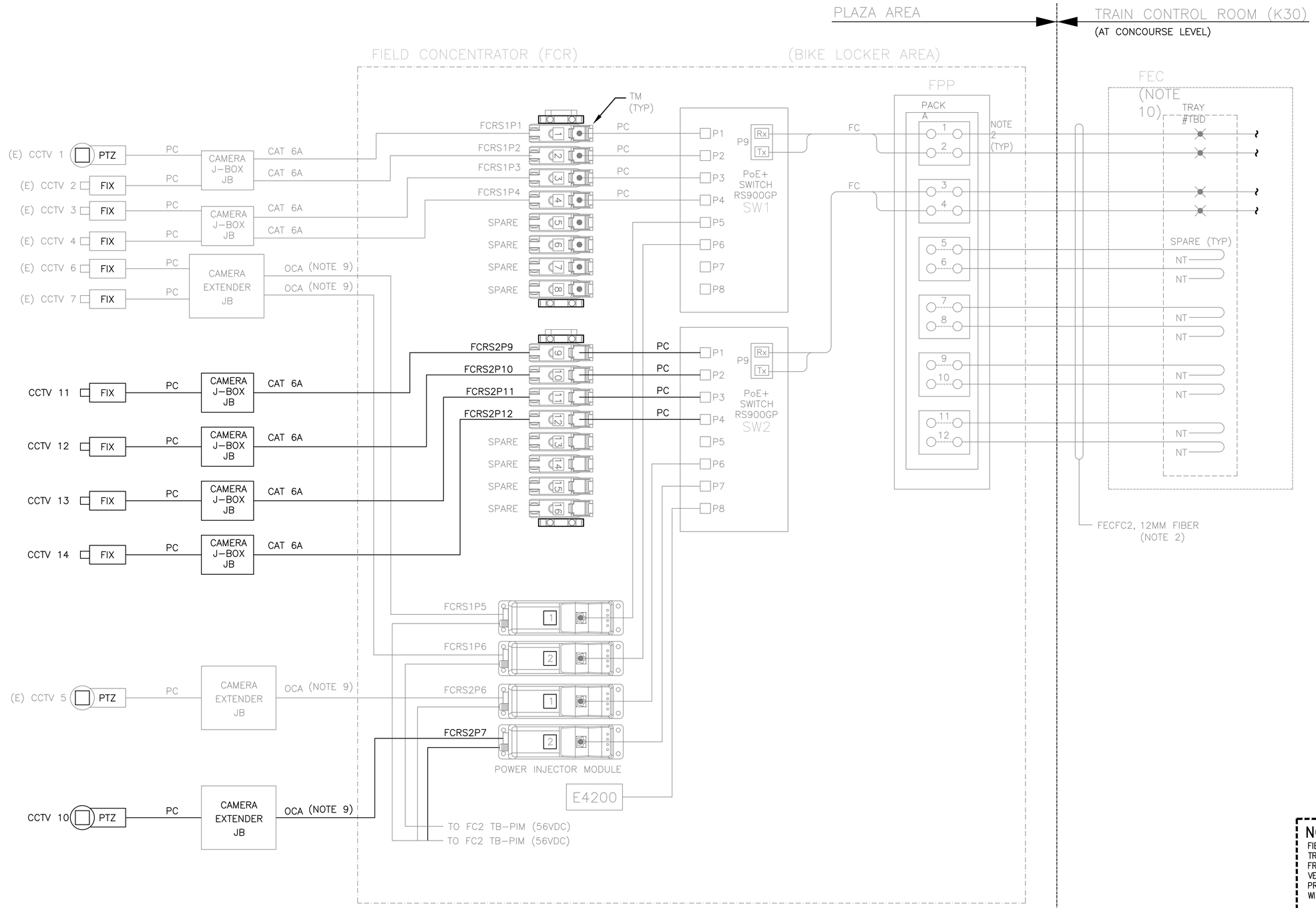

NOTES:

1. FOR GENERAL NOTES, SEE DWG E002.
2. FIBER OPTIC WIRES SHALL BE IN ACCORDANCE WITH TIA 568 STANDARD COLOR CODE.
3. FOR TYPICAL WIRING INTERFACE AND HARNESSING, SEE FRONTAGE RD DRAWINGS.
4. ALL CABLES FROM CAMERA TO FCR ARE CAT 6A F/UTP UNLESS OTHERWISE NOTED.
5. FOR RISER DIAGRAM, SEE DWG E002.
6. FOR FC ASSEMBLY LAYOUT, SEE FRONTAGE RD DRAWINGS.
7. FOR RACEWAY AND CABLE SCHEDULE, SEE FRONTAGE RD DRAWINGS.
8. FOR TYPICAL CAMERA J-BOX ASSEMBLY AND WIRING DETAIL, SEE DWG E010.
9. OCA IS A COMPOSITE COPPER/FIBER CABLE.
10. CONTRACTOR TO PULL-IN, TEST, SPLICE/CONNECT/TERMINATE FIBER OPTIC CABLES IN FEC. TRAY ASSIGNMENT TO BE ASSIGNED BY BART.

LEGEND:

FC – 50 micron OM4 RATED MM DUPLEX PATCH CORD
FPP – FIBER PATCH PANEL
NT – NOT TERMINATED
PC – CAT6A F/UTP PATCH CORD
TM – KEYSTONE INDUSTRIAL MODULE
✕ – SPLICE

CIRCUIT NUMBER DESIGNATION:

FCRS1P1
- SWITCH PORT NO.1
- SWITCH NO.1
- FIELD CONCENTRATOR CABINET NO. R

NOTE:

FIELD CONCENTRATOR CABINET 'FCR', POWER SUPPLY, ISOLATION TRANSFORMER, ETC ARE EXISTING. CCTV SYSTEM INSTALLED IN FRONTAGE RD CONSTRUCTION PHASE. ELECTRICAL CONTRACTOR TO VERIFY ALL CCTV EQUIPMENT FOR A COMPLETE OPERATING SYSTEM PRIOR TO BID. COORDINATE ALL MODIFICATIONS TO THE CCTV SYSTEM WITH BART.

REV.	DATE	BY	SUB	APP.	DESCRIPTION
1	20150811				REISSUED FOR BID
P					ISSUED FOR BID

DESIGNED: SCH/TK
DRAWN: DM
CHECKED: C. KENT
APPROVED: C. KENT
DATE: 20130105

REGISTERED PROFESSIONAL ENGINEER JOSE L. NIÑO No. E 17369 Exp. 9-30-16 ELECTRICAL STATE OF CALIFORNIA

SAN FRANCISCO BAY AREA RAPID TRANSIT DISTRICT

WHM INC. — SUBMITTED

PGAdesign, INC. — APPROVED

MACARTHUR BART PLAZA REPLACEMENT

CCTV SECURITY SYSTEM WIRING DIAGRAM

CADD FILENAME: E009.DWG
SIZE: D
SCALE: NONE
CONTRACT NO.: 17AJ-120
REV.: P
CONTRACT SHEET NO.: E009
PAGE NO.: -

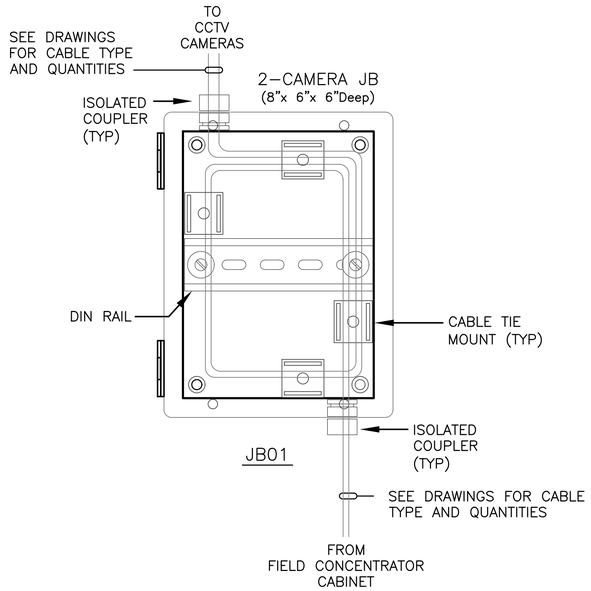

CAMERA JUNCTION BOX TYPE 01 DETAIL

N.T.S.

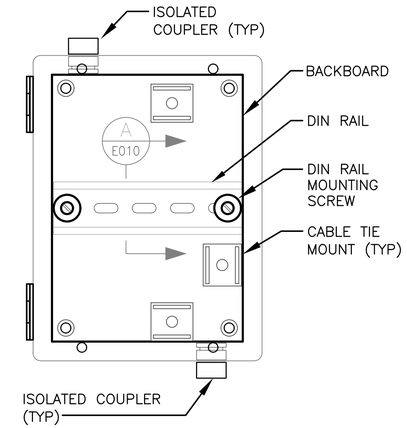

TYPICAL DIN RAIL MOUNTING DETAIL

N.T.S.

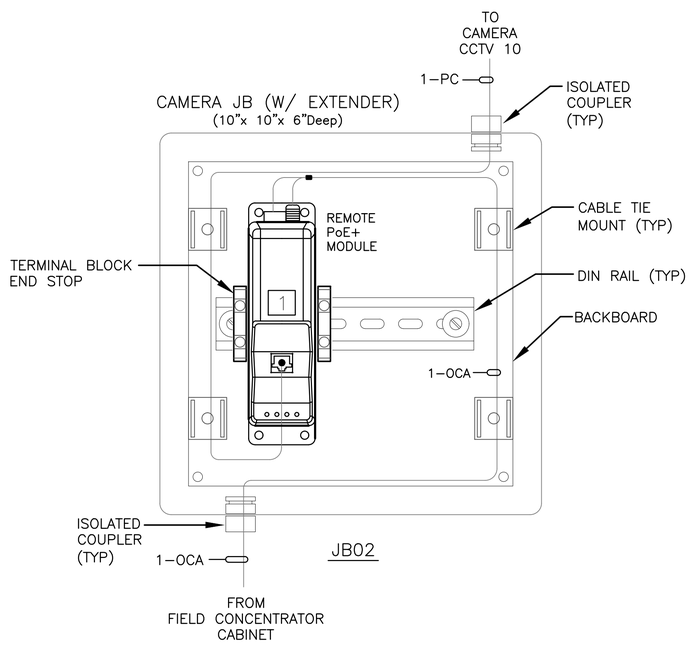

CAMERA JUNCTION BOX TYPE 02 DETAIL

N.T.S.

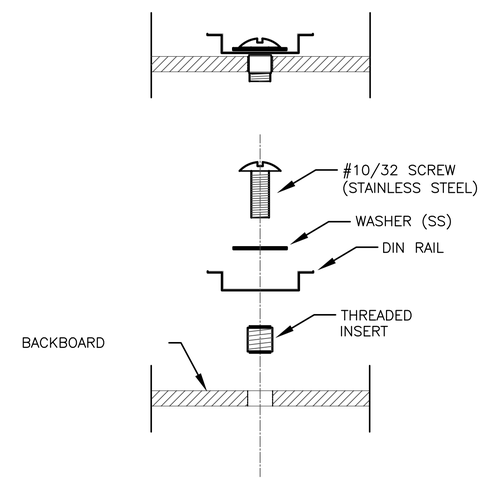

DETAIL

SECTION A E010
NTS

NOTES:

1. FOR GENERAL NOTES, SEE DWG E001.
2. FOR SITE SPECIFIC LOCATION, SEE DWG E103.
3. SINGLE OR MULTIPLE CAMERA J–BOX ASSEMBLY SHALL BE INSTALLED MAXIMUM OF 10 FEET AWAY FROM EACH CAMERA SERVED.

PART LIST

KEYSTONE INDL DIN–RAIL MTG MODULE
SIGNAMAX – KI–DIN–RMM–SL, INDUSTRIAL DIN RAIL MOUNTING MODULE W/ SIDE LIDS, SIEMON, Z6A–SK04, OUTLET, Z–MAX, CAT6A, SHIELDED, KEYSTONE, GREY OR APPROVED EQUAL

CAT6A F/UTP CABLE
BERK–TEK, 10167487, CAT6A, CMP, FTP (PLENUM) GREY OR APPROVED EQUAL

1–PORT REMOTE PoE+ MODULE
ONEREACH PART NO. 81000343, PoE+ CAPABLE, LC/SC DUPLEX, RJ45, M8 POWER INPUT, 2KM DISTANCE DIN RAIL MOUNT, DIM. : 5.336"x 1.74"W x 1.705"H

CAMERA EXTENDER CABLE ASSEMBLY (OCA)
ONEREACH: P/N BHCR02EDD0N44FFM8P–XXX OR EQUAL, COMPOSITE FIBER/COPPER CABLE ASSEMBLY, TIGHT BUFFER, WITH 12AWG WIRE, COMPLETE WITH CONNECTORS.

JUNCTION BOX ENCLOSURE (JB01)
SAGINAW CONTROL, SINGLE DOOR, NEMA 4X, WALL MOUNT WITH BACK PANEL (GLASTIC) AND LOCK KITS OR APPROVED EQUAL
DIMENSION: AS SHOWN

JUNCTION BOX ENCLOSURE (JB02)
CARLON BOX, POLYCARBONATE MATERIAL WITH BACK PANEL (GLASTIC) AND LOCK KITS OR APPROVED EQUAL. DIMENSION: AS SHOWN

DIN RAIL
PHOENIX, STANDARD OR APPROVED EQUAL

TERMINAL BLOCK END STOP
PHOENIX CONTACT FOR TYPE UK5N TERMINAL BLOCK OR APPROVED EQUAL

CABLE TIE MOUNTS
PANDUIT HEAVY DUTY CABLE TIE MOUNT OR EQUAL. FLAME RETARDANT NYLON, NATURAL COLOR, SCREW MOUNT. USE VELCRO STRAPS

BACKBOARD
IPI PLASTIC, GLASTIC'S NEMA GPO–3, WHITE, 1/2" THICK, OR APPROVED EQUAL

THREADED INSERTS
E–Z LOK STAINLESS STEEL INSERTS FOR METAL OR EQUAL SIZE AS REQUIRED.

REV.	DATE	BY	SUB	APP.	DESCRIPTION
1	20150811				REISSUED FOR BID
P					ISSUED FOR BID

DESIGNED: SCH/TK
DRAWN: DM
CHECKED: C. KENT
APPROVED: C. KENT
DATE: 20130105

REGISTERED PROFESSIONAL ENGINEER JOSE L. NE No. E 17369 Exp. 9–30–16 ELECTRICAL STATE OF CALIFORNIA

SAN FRANCISCO BAY AREA RAPID TRANSIT DISTRICT

WHM INC. — SUBMITTED

PGAdesign, INC. — APPROVED

MACARTHUR BART PLAZA REPLACEMENT

CAMERA JUNCTION BOX ASSEMBLY AND WIRING DETAILS

CADD FILENAME: E010.DWG
SIZE: D — SCALE: NONE
CONTRACT NO. 17AJ-120 — REV. P
CONTRACT SHEET NO. E010 — PAGE NO. -

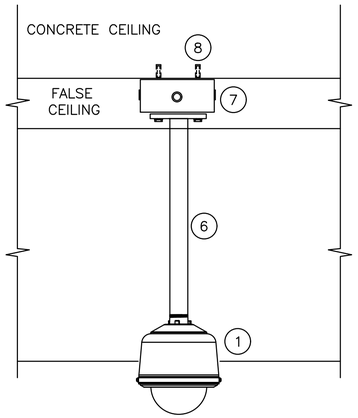

CEILING MOUNT

N.T.S.

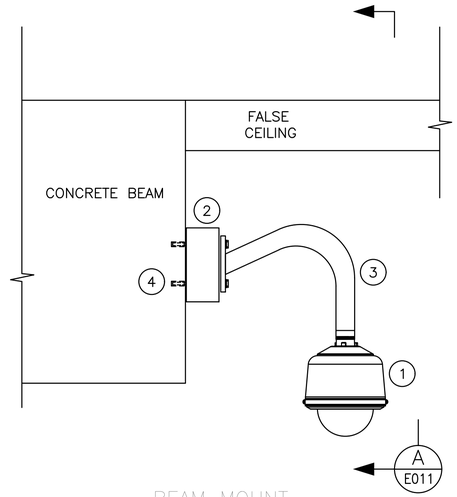

BEAM MOUNT

N.T.S.

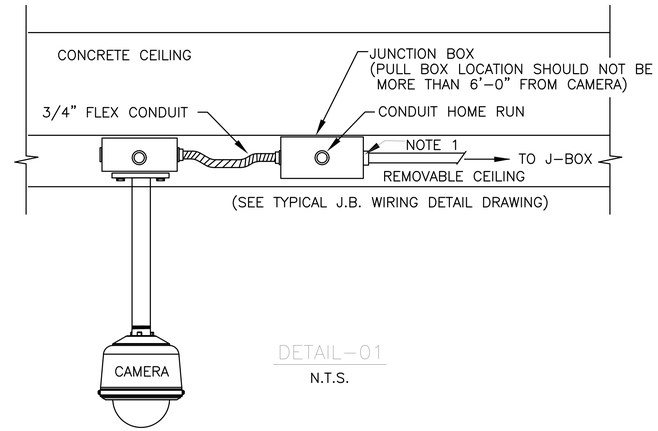

DETAIL-01

N.T.S.

NOTES:

1. REQUIRE ISOLATED COUPLER.
2. ALL BEAM OR CEILING MOUNTED CAMERAS SHALL BE ANCHORED TO EXISTING CONCRETE BEAM OR CEILINGS WITH A MINIMUM OF FOUR 3/8" DIAMETER EXPANSION ANCHORS CONFORMING TO ICC-ESR-1917 WITH 2" MINIMUM EMBEDMENT.
3. ALL ANCHOR HOLE DRILLING SHALL BE A MINIMUM OF 6 INCHES AWAY FROM ANY TYPE OF CONCRETE EDGE.
4. CONTRACTOR IS RESPONSIBLE TO VERIFY LOCATION OF AND AVOID EXISTING REINFORCING BARS, UTILITY PIPES AND CONDUITS BEFORE PERFORMING THE WORK. WHEN INSTALLING CONCRETE ANCHORS IN EXISTING REINFORCED CONCRETE, USE CARE AND CAUTION TO AVOID CUTTING OR DAMAGING THE EXISTING REINFORCING BARS. USE REINFORCING BAR LOCATOR TO MARK EXISTING REINFORCING BARS BEFORE DRILLING.
5. IF EXISTING REINFORCING BAR IS ENCOUNTERED DURING DRILLING, STOP DRILLING IMMEDIATELY, NOTIFY THE ENGINEER, AND PATCH THE HOLE WITH GROUT. RELOCATE ANCHOR AND DRILL NEW HOLE AT LEAST 2 INCHES AWAY FROM THE GROUTED HOLE.

SONY NETWORK CAMERA

1	PENDANT MOUNT CAMERA
2	MOUNTING BOX
3	PENDANT WALL MOUNT BRACKET
4	3/8" REDHEAD ANCHOR W/ BOLTS & WASHERS
5	CAMERA JUNCTION BOX, SEE TYPICAL J.B DRAWING E010 FOR DETAILS
6	1 1/4" CONDUIT HANGER
7	MOUNTING OUTLET BOX, CROUSE HINDS GRFX OR APPROVED EQUAL

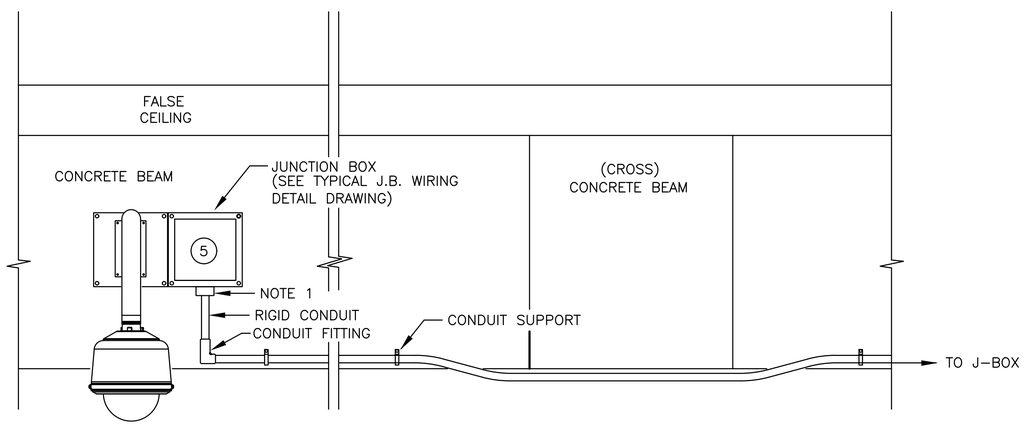

SECTION A E011

NTS

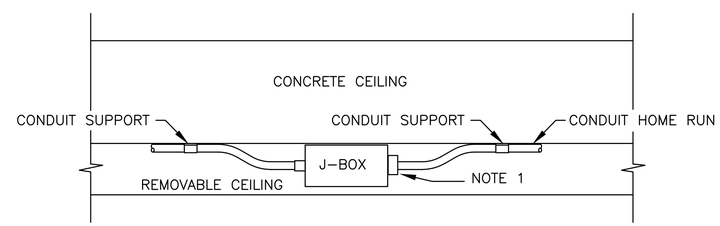

DETAIL-02

N.T.S.

REV.	DATE	BY	SUB	APP.	DESCRIPTION
1	20150811				REISSUED FOR BID
P					ISSUED FOR BID

DESIGNED: SCH/TK
DRAWN: DM
CHECKED: C. KENT
APPROVED: C. KENT
DATE: 20130105

REGISTERED PROFESSIONAL ENGINEER JOSE L. NE No. E 17369 Exp. 9-30-16 ELECTRICAL STATE OF CALIFORNIA

SAN FRANCISCO BAY AREA RAPID TRANSIT DISTRICT

WHM INC. — SUBMITTED

PGAdesign, INC. — APPROVED

MACARTHUR BART PLAZA REPLACEMENT

UNIFIED OPTICAL NETWORK
FIELD CONCENTRATOR SYSTEM
TYPICAL CAMERA MOUNTING DETAILS

CADD FILENAME: E003.DWG
SIZE: D
SCALE: NONE
CONTRACT NO.: 17AJ-120
REV.: P
CONTRACT SHEET NO.: E011
PAGE NO.: -

BIKELINK™ GEN2 BIKE PARKING ACCESS CONTROL KIOSK

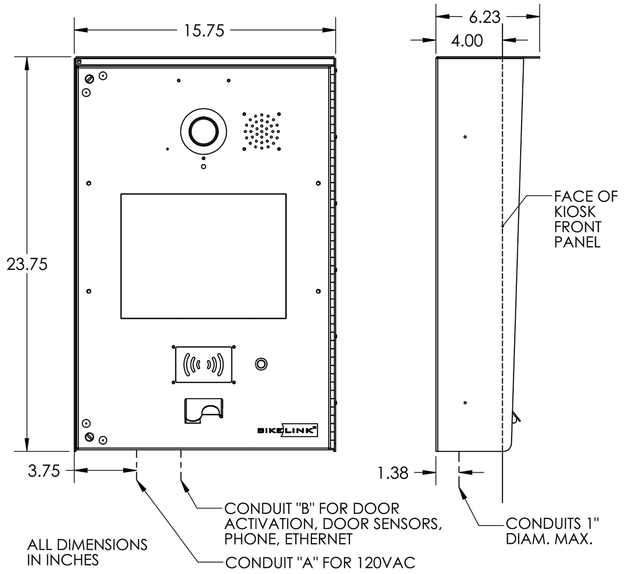

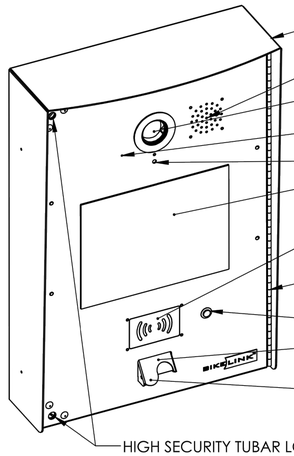

INSTALLATION REQUIREMENTS

GENERAL:
- AVOID LOCATING KIOSK WHERE DISPLAY WILL BE SUBJECT TO DIRECT SUNLIGHT.
- LOCATE KIOSK ON LATCH SIDE OF DOOR. ENSURE AT LEAST 5 FEET CLEAR IN FRONT OF KIOSK.
- PROVIDE ARTIFICIAL LIGHTING AT KIOSK TO FACILITATE REMOTE VERIFICATION OF USER ID VIA CAMERA.
- IF POSSIBLE, PROVIDE PRELIMINARY AND CONSTRUCTION DRAWINGS TO ELOCK FOR REVIEW/COMMENT.

FOR RECESSED INSTALLATION:
- PROVIDE 16"W X 24"H CLEAR OPENING WITH NO ROUNDED INSIDE CORNERS.
- LOCATE BASE OF OPENING 41" ABOVE FINISH FLOOR.
- TYPICAL DEPTH OF RECESS IS 4" MIN. A DEEPER RECESS IS ACCEPTABLE. CONTACT ELOCK IF A SHALLOWER RECESS IS REQUIRED.
- REAR OF OPENING MAY BE OPEN TO AIR OR COVERED (KIOSK VENTS THROUGH FRONT ONLY).
- STRUCTURAL CONNECTION OF UNIT (BY ELOCK TECHNICIANS) IS TO VERTICAL SIDES OF OPENING PROVIDED.

FOR SURFACE MOUNTED INSTALLATION:
- CONTACT ELOCK REGARDING SUITABILITY OF MOUNTING SURFACE

AC POWER:
- INSTALL 1" DIAM MAX CONDUIT "A" FOR AC POWER AT LOCATION SHOWN ON DRAWINGS AFTER OUTER ENCLOSURE IS MOUNTED BY ELOCK TECHNICIANS.
- PULL CABLE MEETING LOCAL CODE, DRILL OUTER ENCLOSURE AS INDICATED, AND CONNECT TO HANDY BOX PROVIDED. 15AMP SEPARATE CIRCUIT 120VAC POWER SHALL BE LIVE BEFORE ELOCK TECHNICIANS COMPLETE INSTALLATION. PROVIDE ELOCK TECHNICIANS ACCESS TO CLEARLY LABELED BREAKERS FOR AC POWER.
- UNINTERRUPTABLE POWER SUPPLY SYSTEM (NOT INCLUDED) RECOMMENDED.

CONDUIT FOR SENSORS, ETHERNET, DOOR, PHONE:
- INSTALL 1" DIAM MAX CONDUIT "B" AT LOCATION SHOWN ON DRAWINGS AFTER ELOCK TECHNICIANS MOUNT OUTER ENCLOSURE.

ELECTRIC STRIKE, LATCH, OR MOTORIZED DOOR:
- PROVIDE AND INSTALL APPROPRIATE ELECTRONIC DOOR SECURITY HARDWARE. KIOSK IS DESIGNED TO TRIGGER RELEASE OF AND SUPPLY POWER UP TO 1AMP MAX. FOR ONE 12VDC (NOT 24VDC) ELECTRIC STRIKE SUCH AS VON DUPRIN 5100, OR ONE ELECTRIC LATCH SUCH AS SCHLAGE ND80 (FAIL SECURE). KIOSK CAN ALSO ACTIVATE BUT NOT POWER A MOTORIZED DOOR SUCH AS STANLEY DURA-GLIDE 2000.
- CONNECT 20AWG TO ELECTRIC LATCH, STRIKE, OR MOTORIZED DOOR TRIGGER, PULL WIRES THROUGH CONDUIT INTO OUTER ENCLOSURE, LABEL INDIVIDUAL CONDUCTORS CLEARLY AND LEAVE 24" EXCESS WIRE INSIDE KIOSK ENCLOSURE.

DOOR SENSORS:
- FOR EACH DOOR ENTERING PARKING AREA PROVIDE AND INSTALL 1/2" DIAM. MIN. CONDUITS BETWEEN DOOR FRAME CAVITY ALONG TOP OR LATCH SIDE OF DOOR AND KIOSK ENCLOSURE. SENSORS SHOULD BE LOCATED AS CLOSE TO TOP LATCH-SIDE CORNER OF DOOR AS FEASIBLE.
- PULL FOUR OR MORE CONDUCTOR 22AWG CABLE OR CAT 6 CABLE AND LEAVE 24" MIN. EXCESS AT EACH END.
- ELOCK TECHNICIANS WILL INSTALL DOOR SENSOR HARDWARE AND TERMINATE CONDUCTORS.

TELEPHONE:
- PROVIDE AND INSTALL 1/2" DIAM. MIN. CONDUITS BETWEEN TELEPHONE JACK AND KIOSK ENCLOSURE.
- PULL APPROPRIATE CABLE AND LEAVE 24" MIN. EXCESS AT KIOSK.
- DEDICATED TOLL FREE LOCAL POTS LANDLINE TELEPHONE SERVICE SHALL BE LIVE BEFORE ELOCK TECHNICIANS COMPLETE INSTALLATION. LONG DISTANCE SERVICE PREFERRED (REDUCES WAIT TIME FOR USERS WHEN CALLS ARE CONNECTED.)
- POTS TELEPHONE SERVICE STRONGLY PREFERRED. VOIP CAN ONLY BE USED IF TERMINAL ADAPTER IS PROVIDED TO CONVERT TO FXS.
- PROVIDE TELEPHONE NUMBER.

INTERNET:
- PROVIDE AND INSTALL 1/2" DIAM. MIN. CONDUITS BETWEEN INTERNET MODEM AND KIOSK ENCLOSURE.
- PULL TWO CAT6 OR BETTER CABLE AND LEAVE 24" MIN. EXCESS AT KIOSK.
- TWO LIVE AND FULLY TERMINATED ETHERNET CABLES REQUIRED BEFORE ELOCK TECHNICIANS COMPLETE INSTALLATION. CLEARLY LABEL ALL CABLES.
- PROVIDE TWO STATIC IP ADDRESSES (INTERNAL ADDRESSES ARE ACCEPTABLE WITH PORT FORWARDING AS DESCRIBED BELOW).
- PROVIDE BROADBAND INTERNET SERVICE CAPABLE OF 128Kbps UP AND DOWN WITH BURSTS UP TO 1.5Mbps UP.
- BROADBAND INTERNET SERVICE SEPARATE FROM SECURE NETWORK STRONGLY PREFERRED.
- ONE CONNECTION NEEDS INCOMING ACCESS TO INCOMING TCP PORT 80 (IF THROUGH FIREWALL, ANY EXTERNAL PORT THAT GETS FORWARDED TO PORT 80 IS OKAY.)
- ONE CONNECTION NEEDS INCOMING ACCESS TO INCOMING TCP PORT 22 (IF THROUGH FIREWALL, ANY EXTERNAL PORT THAT GETS FORWARDED TO PORT 22 IS OKAY.)
- PROVIDE FIREWALL INFORMATION, IF APPLICABLE.

COPYRIGHT (C) 2013 ELOCK TECHNOLOGIES LLC
REV 3.29.13

800 HEINZ AVENUE SUITE 11
BERKELEY CA 94710 USA
TEL: (510) 549-2853
FAX: (510) 549-9157
info@elocktech.com

eLock TECHNOLOGIES LLC

GENERAL NOTE

1. ELECTRICAL CONTRACTOR SHALL INSTALL PROVISIONS FOR NEW BIKE LOCKER ACCESS PANEL. VERIFY IN THE FIELD THAT SPARE UNDERGROUND CONDUITS ARE AVAILABLE FOR NEW BIKE LOCKER ACCESS PANEL. ROUTING AND TERMINATION POINTS SHALL BE COORDINATED WITH BART AND ELOCK. POWER CONDUCTORS AND SIGNAL CABLES SHALL BE PROVIDED FOR A COMPLETE WORKING SYSTEM IN COMPLIANCE WITH BART STANDARDS AND SPECIFICATIONS. VERIFY EXACT LOCATION OF DOOR ACCESS PANEL WITH BIKE LOCKER MANUFACTURER. COORDINATE WITH BART, ELOCK AND BIKE LOCKER ACCESS PANEL MANUFACTURER FOR A COMPLETE WORKING SYSTEM.

REV.	DATE	BY	SUB	APP.	DESCRIPTION
1	20150811				REISSUED FOR BID
P	20130628				ISSUED FOR BID

DESIGNED: SCH/TK
DRAWN: DM
CHECKED: C. KENT
APPROVED: C. KENT
DATE: 20130105

REGISTERED PROFESSIONAL ENGINEER JOSE L. NE No. E 17369 Exp. 9-30-16 ELECTRICAL STATE OF CALIFORNIA

SAN FRANCISCO BAY AREA RAPID TRANSIT DISTRICT

WHM INC. — SUBMITTED

PGAdesign, INC. — APPROVED

MACARTHUR BART PLAZA REPLACEMENT

BIKE LOCKER ACCESS PANEL REQUIREMENTS

CADD FILENAME: E012.DWG
SIZE: D — SCALE: NONE
CONTRACT NO.: 17AJ-120 — REV.: P
CONTRACT SHEET NO.: E013 — PAGE NO.: -

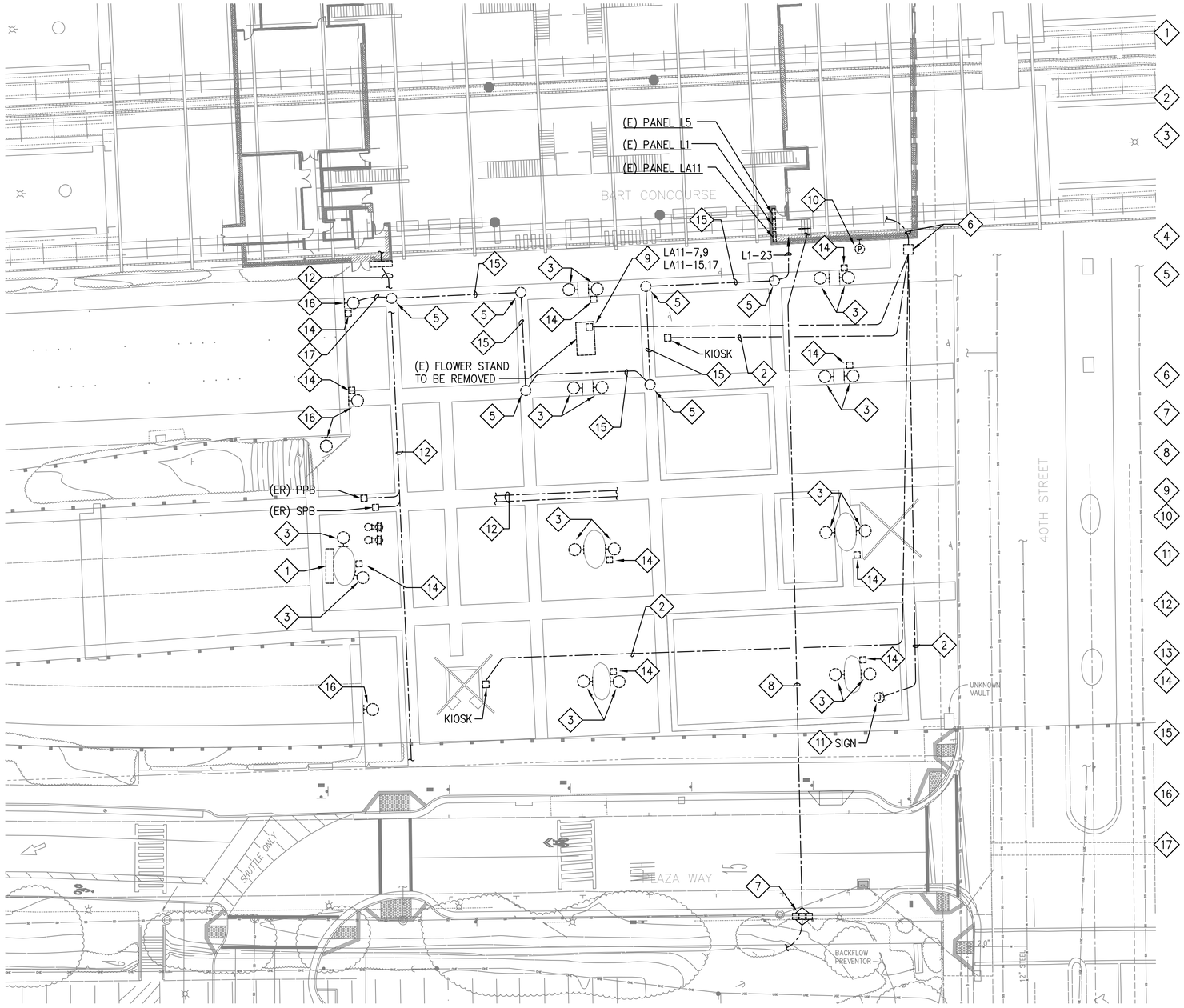

SHEET NOTES

1. EXISTING FIELD CONCENTRATOR CABINET 'FCR' AND POWER SUPPLY CONTROL PANEL FOR CCTV SYSTEM. VERIFY COMPONENTS AND CAPACITY WITH BART. SEE FRONTAGE ROAD AS-BUILTS FOR MORE INFORMATION
2. EXISTING CONDUIT AND CONDUCTORS TO BE INTERCEPTED AND REUSED. VERIFY CONDUCTORS AND ROUTING IN FIELD.
3. BASE BID – EXISTING COLUMN MOUNTED HID FIXTURES TO BE REMOVED AND REPLACED USING EXISTING CONDUITS AND CIRCUITRY.
   ADD ALTERNATE #1 – EXISTING COLUMN MOUNTED HID FIXTURES TO BE REMOVED AND REPLACED USING EXISTING CONDUITS AND CIRCUITRY.
   ADD ALTERNATE #2 – EXISTING COLUMN MOUNTED HID FIXTURES TO BE REMOVED AND REPLACED USING NEW CONDUITS AND CIRCUITRY.
4. NOT USED.
5. BASE BID – EXISTING POLE LIGHTS, CONDUITS AND WIRING TO BE REMOVED.
   ADD ALTERNATE #1 – EXISTING POLE LIGHT FIXTURES AND POLES TO BE DISCONNECTED AND REPLACED WITH NEW.
   ADD ALTERNATE #2 – EXISTING POLE LIGHT FIXTURES AND POLES TO BE DISCONNECTED AND REMOVED. PROVIDE AND INSTALL NEW POLE LIGHT FIXTURES, POLES. CONDUIT AND CONDUCTORS.
6. EXISTING PULLBOX TO REMAIN. EXISTING CONDUITS AND CONDUCTORS TO SUBSTATION ROOM TO REMAIN.
7. EXISTING PULLBOXES TO BE REMOVED. COORDINATE REMOVAL WITH LANDSCAPE ARCHITECT AND BART.
8. EXISTING (6) 4" UNDERGROUND CONDUITS FOR EXISTING CCTV, EMERGENCY PHONE AND PARKING LOT LIGHTING TO BE REMOVED. COORDINATE REMOVAL WITH LANDSCAPE ARCHITECT AND BART.
9. EXISTING CONDUIT TO BE INTERCEPTED AND REMOVED.
10. EXISTING PHOTOCELL ON ROOF TO REMAIN.
11. EXISTING SIGN TO BE REMOVED. RE-USE EXISTING SIGN CIRCUIT CONDUIT AND J-BOX FOR NEW SIGN. VERIFY REQUIREMENTS WITH ARCHITECT.
12. EXISTING JOINT TRENCH TO REMAIN. SEE FRONTAGE ROAD AND PARKING GARAGE PERMIT SETS FOR CONDUITS AND CABLING IN THIS AREA.
13. NOT USED
14. BASE BID – EXISTING PULLBOX TO REMAIN.
    ADD ALTERNATE #1 – EXISTING PULLBOX TO REMAIN.
    ADD ALTERNATE #2 – EXISTING PULLBOX TO BE REMOVED.
15. BASE BID – EXISTING CONDUIT AND WIRING TO BE REMOVED.
    ADD ALTERNATE #1 – EXISTING CONDUIT AND WIRING TO REMAIN.
    ADD ALTERNATE #2 – EXISTING CONDUIT AND WIRING TO BE REPLACED WITH NEW CONDUIT AND CIRCUITRY.
16. EXISTING WALL MOUNTED LIGHT FIXTURES TO BE DISCONNECTED AND REMOVED. CONDUITS AND WIRING ARE TO BE REUSED FOR REPLACEMENT OF LIGHT FIXTURES.
17. EXISTING CONDUCTOR FROM EXISTING POLE MOUNTED LIGHT FIXTURE TO EXISTING WALL MOUNTED LIGHT FIXTURE TO BE DISCONNECTED AND REMOVED. SEE NEW WORK FOR RECONNECTION OF WALL MOUNTED LIGHT FIXTURE.

1 ELECTRICAL SITE DEMOLITION PLAN

SCALE: 1" = 20'-0"

N

20' 0' 20' 40'

GRAPHIC SCALE

REV.	DATE	BY	SUB	APP.	DESCRIPTION
1	20150811				REISSUED FOR BID
P	20130628				ISSUED FOR BID

DESIGNED: SCH/TK
DRAWN: DM
CHECKED: C. KENT
APPROVED: C. KENT
DATE: 20130105

REGISTERED PROFESSIONAL ENGINEER JOSE L. NE No. E 17369 Exp. 9-30-16 ELECTRICAL STATE OF CALIFORNIA

SAN FRANCISCO BAY AREA RAPID TRANSIT DISTRICT

WHM INC. — SUBMITTED

PGAdesign, INC. — APPROVED

MACARTHUR BART PLAZA REPLACEMENT

ELECTRICAL SITE DEMOLITION PLAN

CADD FILENAME: E101.DWG
SIZE: D
SCALE: NONE
CONTRACT NO.: 17AJ-120
REV.: P
CONTRACT SHEET NO.: E101
PAGE NO.: -

FIXTURE SCHEDULE

TYPE	MANUFACTURER AND CATALOG NUMBER	LAMP QUANTITY AND TYPE	WATTAGE AND VOLTAGE	DESCRIPTION
A	PACE SLOOP ASFL-1650-L-115LED-55-PAM	LED	115 WATTS 277 VOLT	NEW COLUMN OR WALL MOUNTED FIXTURE. COLOR AND FINISH TO BE SELECTED BY LANDSCAPE ARCHITECT.
AA	**ALTERNATE FIXTURE** BEACON LIGHTING LED VIPER 80NB-235-T4-5K-WB	LED	235 WATTS 277 VOLT	ALTERNATE FIXTURE TO TYPE A. NEW COLUMN OR WALL MOUNTED FIXTURE. COLOR AND FINISH TO BE SELECTED BY LANDSCAPE ARCHITECT.
C	LITHONIA LIGHTING OMERO LED MR1-LED-1-63B530_40K-SR5	LED	75 WATTS 277 VOLT	NEW POLE MOUNTED FIXTURE ON EXISTING POLE. COLOR AND FINISH TO BE SELECTED BY LANDSCAPE ARCHITECT.

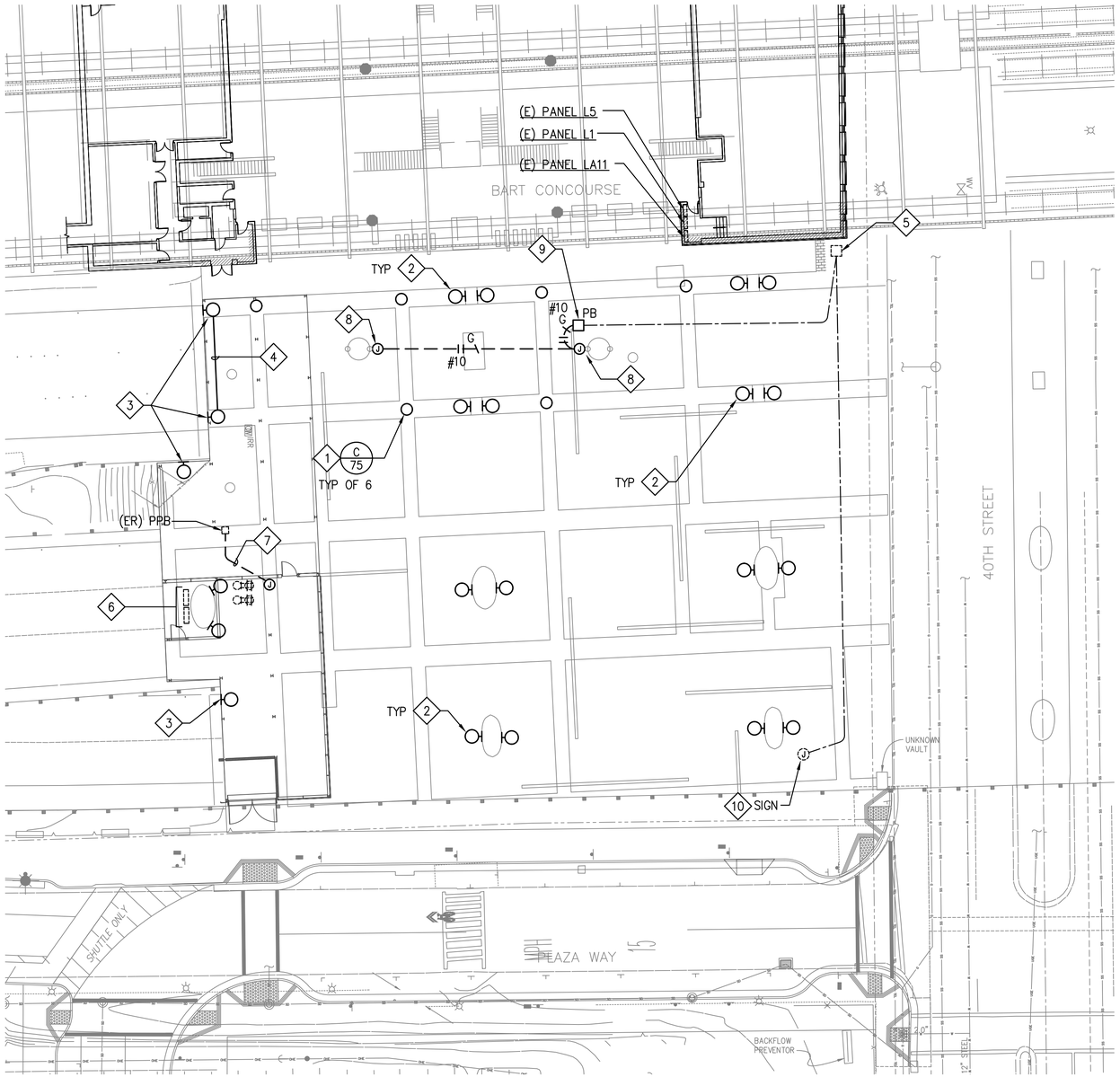

1 ELECTRICAL SITE LIGHTING AND POWER PLAN

SCALE: 1" = 20'-0"

N

SHEET NOTES

1. ADD ALTERNATE #1 – PROVIDE NEW POLE LIGHT FIXTURES AND POLES. CONNECT NEW FIXTURES TO EXISTING CIRCUITRY. VERIFY CIRCUITRY WITH BART. VERIFY FIXTURE WITH LANDSCAPE ARCHITECT.
2. NEW COLUMN MOUNTED DOWNLIGHTS TO BE CONNECTED TO EXISTING CONDUITS AND CIRCUITRY. TYPICAL OF 18. ELECTRICAL CONTRACTOR TO PROVIDE PRICING FOR FIXTURE TYPE A AND A SEPARATE PRICE FOR FIXTURE TYPE AA.
3. NEW WALL MOUNTED DOWNLIGHTS TO BE CONNECTED TO EXISTING CONDUITS AND CIRCUITRY. TYPICAL OF 4. ELECTRICAL CONTRACTOR TO PROVIDE PRICING FOR FIXTURE TYPE A AND A SEPARATE PRICE FOR FIXTURE TYPE AA.
4. PROVIDE SURFACE MOUNT CONDUIT FOR RECONNECTION OF WALL MOUNT LIGHT FIXTURE.
5. EXISTING PULLBOX TO REMAIN.
6. EXISTING FIELD CONCENTRATOR CABINET 'FCR' AND POWER SUPPLY CONTROL PANEL FOR CCTV SYSTEM. VERIFY LOCATION WITH LANDSCAPE ARCHITECT. SEE DETAILS AND SPECIFICATIONS FOR REQUIREMENTS.
7. PROVIDE 120V POWER FOR NEW EMERGENCY TELEPHONE BOX WITH BLUE LIGHT CIRCUIT LA11–19. SEE FRONTAGE ROAD ELECTRICAL DRAWINGS FOR COMPLETE CIRCUITRY.
8. NEW 2–SIDED ILLUMINATED MAP KIOSK. PROVIDE 120V, 1ø POWER TO EACH MAP LOCATION. ELECTRICAL CONTRACTOR SHALL COORDINATE INSTALLATION WITH MAP SYSTEM SUPPLIER AND PROVIDE ALL NECESSARY ELECTRICAL CONNECTIONS, WIRING AND CONTROL DEVICES PER MANUFACTURER'S INSTRUCTIONS.
9. EXTEND CIRCUIT NUMBER LA11–9 TO 2 NEW 2–SIDED ILLUMINATED MAP KIOSKS, SEE NOTE 11.
10. EXISTING CONDUIT AND CONDUCTORS SAVED IN DEMOLITION WORK FOR NEW BART SIGNAGE. VERIFY CIRCUITRY AND ROUTING IN FIELD. VERIFY ELECTRICAL REQUIREMENTS WITH SIGN MANUFACTURER.

20' 0' 20' 40'

GRAPHIC SCALE

REV.	DATE	BY	SUB	APP.	DESCRIPTION
1	20150811				REISSUED FOR BID
P	20130628				ISSUED FOR BID

DESIGNED: SCH/TK
DRAWN: DM
CHECKED: C. KENT
APPROVED: C. KENT
DATE: 20130105

REGISTERED PROFESSIONAL ENGINEER JOSE L. INC No. E 17369 Exp. 9-30-16 ELECTRICAL STATE OF CALIFORNIA

SAN FRANCISCO BAY AREA RAPID TRANSIT DISTRICT

WHM INC. — SUBMITTED

PGAdesign, INC. — APPROVED

MACARTHUR BART PLAZA REPLACEMENT

ELECTRICAL SITE LIGHTING AND POWER PLAN

CADD FILENAME: E102.DWG
SIZE: D
SCALE: NONE
CONTRACT NO.: 17AJ-120
REV.: P
CONTRACT SHEET NO.: E102
PAGE NO.: -

FIXTURE SCHEDULE				
TYPE	MANUFACTURER AND CATALOG NUMBER	LAMP QUANTITY AND TYPE	WATTAGE AND VOLTAGE	DESCRIPTION
A	PACE SLOOP ASFL-1650-L-115LED-55-PAM	LED	115 WATTS 277 VOLT	NEW COLUMN OR WALL MOUNTED FIXTURE. COLOR AND FINISH TO BE SELECTED BY LANDSCAPE ARCHITECT.
AA	**ALTERNATE FIXTURE** BEACON LIGHTING LED VIPER 80NB-235-T4-5K-WB	LED	235 WATTS 277 VOLT	ALTERNATE FIXTURE TO TYPE A. NEW COLUMN OR WALL MOUNTED FIXTURE. COLOR AND FINISH TO BE SELECTED BY LANDSCAPE ARCHITECT.
C	LITHONIA LIGHTING OMERO LED MR1-LED-1-63B530_40K-SR5	LED	75 WATTS 277 VOLT	NEW POLE MOUNTED FIXTURE ON EXISTING POLE. COLOR AND FINISH TO BE SELECTED BY LANDSCAPE ARCHITECT.

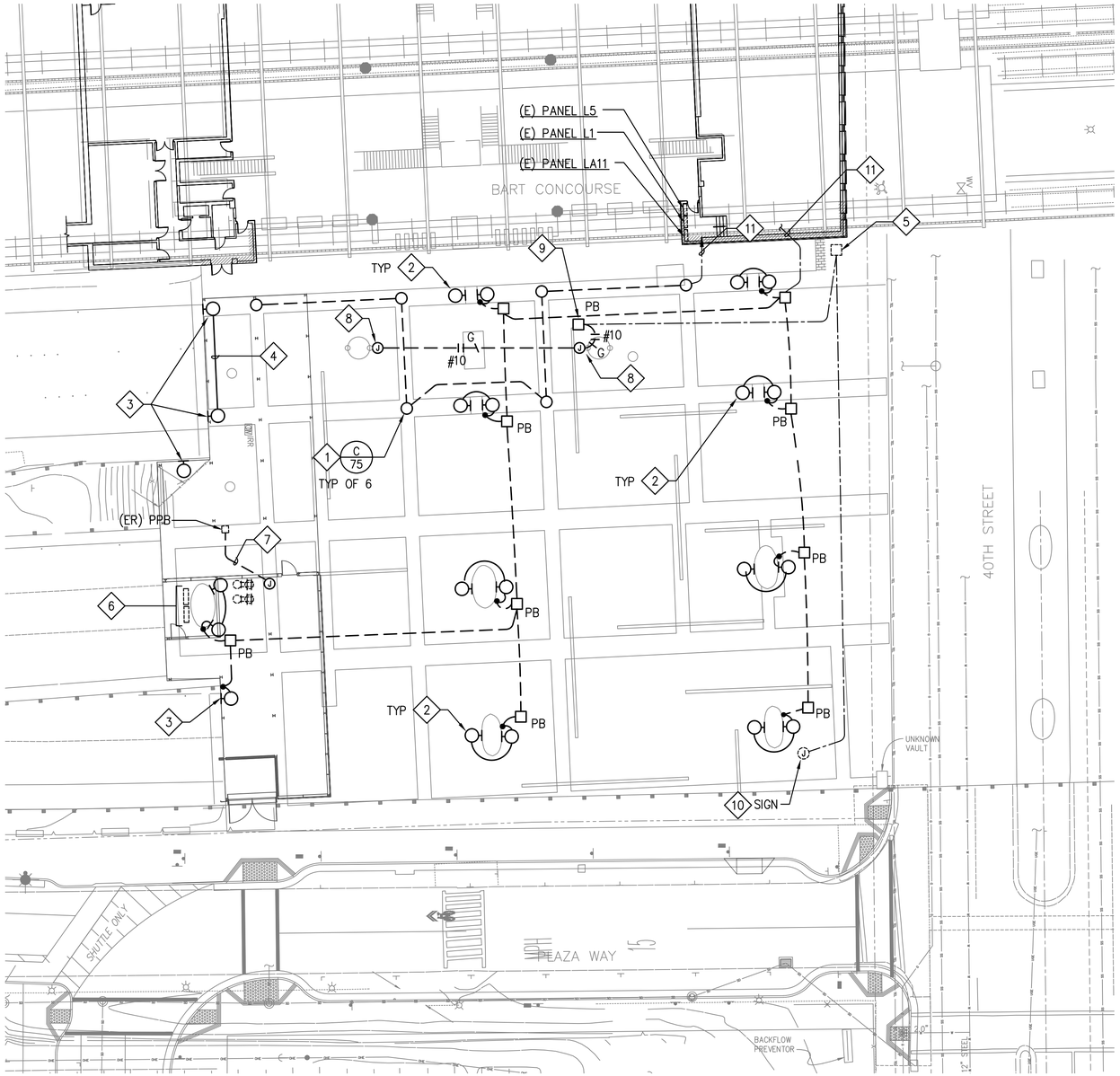

1 ELECTRICAL SITE LIGHTING AND POWER PLAN

SCALE: 1" = 20'-0"

N

GENERAL NOTES

1. ADD ALTERNATE #2 – PROVIDE NEW CONDUITS AND CIRCUITRY AS SHOWN FOR INSTALLATION OF NEW LIGHT FIXTURES. VERIFY ROUTING OF CONDUITS WITH LANDSCAPE ARCHITECT.

SHEET NOTES

1. ADD ALTERNATE #1 – PROVIDE NEW POLE LIGHT FIXTURES AND POLES. CONNECT NEW FIXTURES TO EXISTING CIRCUITRY. VERIFY CIRCUITRY WITH BART. VERIFY FIXTURE WITH LANDSCAPE ARCHITECT.
2. NEW COLUMN MOUNTED DOWNLIGHTS TO BE CONNECTED TO EXISTING CONDUITS AND CIRCUITRY. TYPICAL OF 18. ELECTRICAL CONTRACTOR TO PROVIDE PRICING FOR FIXTURE TYPE A AND A SEPARATE PRICE FOR FIXTURE TYPE AA.
3. NEW WALL MOUNTED DOWNLIGHTS TO BE CONNECTED TO EXISTING CONDUITS AND CIRCUITRY. TYPICAL OF 4. ELECTRICAL CONTRACTOR TO PROVIDE PRICING FOR FIXTURE TYPE A AND A SEPARATE PRICE FOR FIXTURE TYPE AA.
4. PROVIDE SURFACE MOUNT CONDUIT FOR RECONNECTION OF WALL MOUNT LIGHT FIXTURE.
5. EXISTING PULLBOX TO REMAIN.
6. EXISTING FIELD CONCENTRATOR CABINET 'FCR' AND POWER SUPPLY CONTROL PANEL FOR CCTV SYSTEM. VERIFY LOCATION WITH LANDSCAPE ARCHITECT. SEE DETAILS AND SPECIFICATIONS FOR REQUIREMENTS.
7. PROVIDE 120V POWER FOR NEW EMERGENCY TELEPHONE BOX WITH BLUE LIGHT CIRCUIT LA11–19. SEE FRONTAGE ROAD ELECTRICAL DRAWINGS FOR COMPLETE CIRCUITRY.
8. NEW 2–SIDED ILLUMINATED MAP KIOSK. PROVIDE 120V, 1ø POWER TO EACH MAP LOCATION. ELECTRICAL CONTRACTOR SHALL COORDINATE INSTALLATION WITH MAP SYSTEM SUPPLIER AND PROVIDE ALL NECESSARY ELECTRICAL CONNECTIONS, WIRING AND CONTROL DEVICES PER MANUFACTURER'S INSTRUCTIONS.
9. EXTEND CIRCUIT NUMBER LA11–9 TO 2 NEW 2–SIDED ILLUMINATED MAP KIOSKS, SEE NOTE 11.
10. EXISTING CONDUIT AND CONDUCTORS SAVED IN DEMOLITION WORK FOR NEW BART SIGNAGE. VERIFY CIRCUITRY AND ROUTING IN FIELD. VERIFY ELECTRICAL REQUIREMENTS WITH SIGN MANUFACTURER.
11. EXISTING CIRCUITRY SAVED IN DEMOLITION WORK. CONNECT NEW FIXTURES TO EXISTING HOMERUNS. VERIFY EXACT CIRCUITRY WITH BART.

20' 0' 20' 40'

GRAPHIC SCALE

REV.	DATE	BY	SUB	APP.	DESCRIPTION
1	20150811				REISSUED FOR BID
P	20130628				ISSUED FOR BID

DESIGNED: SCH/TK
DRAWN: DM
CHECKED: C. KENT
APPROVED: C. KENT
DATE: 20130105

REGISTERED PROFESSIONAL ENGINEER JOSE L. ME No. E 17369 Exp. 9-30-16 ELECTRICAL STATE OF CALIFORNIA

SAN FRANCISCO BAY AREA RAPID TRANSIT DISTRICT

WHM INC. SUBMITTED

PGAdesign, INC. APPROVED

MACARTHUR BART PLAZA REPLACEMENT

ELECTRICAL SITE LIGHTING AND POWER PLAN ALTERNATE #2

CADD FILENAME: E102.DWG
SIZE: D
SCALE: NONE
CONTRACT NO.: 17AJ-120
REV.: P
CONTRACT SHEET NO.: E102A
PAGE NO.: -

SHEET NOTES

1. VERIFY EXACT ROUTING OF UNDERGROUND CONDUITS WITH LANDSCAPE ARCHITECT.

SHEET NOTES

1. EXISTING FIELD CONCENTRATOR CABINET 'FCR' AND POWER SUPPLY CONTROL PANEL FOR CCTV SYSTEM. VERIFY AND CONFIRM AVAILABLE CAPACITY FOR NEW CCTV CAMERAS IN PLAZA. SEE DETAILS AND BFS SPECIFICATIONS FOR REQUIREMENTS.
2. EXISTING WALL MOUNTED BUILDING ENTRANCE PROTECTOR BLOCK.
3. EXISTING UNDERGROUND SIGNAL CONDUITS IN JOINT TRENCH WITH CABLES FOR EMERGENCY CALL BOX AND CCTV SYSTEM. VERIFY CONDUIT AND CABLES IN FIELD. SEE DETAILS FOR MORE INFORMATION.
4. EXISTING WALL MOUNTED PULLBOX. VERIFY CONDUITS IN FIELD.
5. EXISTING CABLE FOR EMERGENCY TELEPHONE SYSTEM IN EXISTING CABLES TRAY IN CORRIDOR. SEE DETAIL 2/E002 FOR WIRE TYPE.
6. EXISTING 1" CONDUIT WITH CABLES FOR EMERGENCY CALL BOX.
7. EXISTING CAT 6 CABLES TO (E) TELEPHONE BACKBOARD IN TRAIN CONTROL ROOM K30. SEE DETAIL 1/E002.
8. 1" UNDERGROUND CONDUIT WITH 1 PAN/TILT/ZOOM CCTV CABLE AND 1#8G.
9. 1" UNDERGROUND CONDUIT WITH 1 FIXED AND 1 PAN/TILT/ZOOM CCTV CABLES AND 1#8G.
10. EXISTING BARTNET CABINET 100.
11. EXISTING 1" CONDUIT WITH CABLES FOR CCTV SYSTEM TO BARTNET CABINET 100.
12. EXISTING FIBER ENTRANCE CABINET.
13. 1 1/2" UNDERGROUND CONDUIT WITH 3 FIXED AND 1 PAN/TILT/ZOOM CCTV CABLES AND 1#8G.
14. 1" UNDERGROUND CONDUIT WITH 1 FIXED CCTV CABLE AND 1#8G.
15. 2 1/2"" UNDERGROUND CONDUIT WITH 4 FIXED AND 1 PAN/TILT/ZOOM CCTV CABLES AND 1#8G TO CCTV TO FIELD CONCENTRATOR CABINET.
16. 1" UNDERGROUND CONDUIT WITH CABLES FOR EMERGENCY CALL BOX. SEE DETAIL 1/E002 FOR MORE INFORMATION.
17. EXISTING FIBER OPTIC CABLE FOR CCTV SYSTEM RUN IN EXISTING CABLE TRAY. SEE RISER DIAGRAMS AND DETAILS FOR MORE INFORMATION.
18. EXISTING 1" CONDUIT WITH CABLES FOR CCTV SYSTEM TO FIBER ENTRANCE CABINET.

NOTE:
SEE SHEETS U201, U202 AND U203 FROM THE FULL FRONTAGE ROAD PERMIT SET FOR INFORMATION REGARDING JOINT TRENCH DETAILS. JOINT TRENCH CONDUITS ARE NOT INCLUDED IN THIS CONTRACT. ELECTRICAL CONTRACTOR SHALL PROVIDE CONDUCTORS AND CABLING IN EXISTING JOINT TRENCH CONDUITS. SEE CONTRACT 17AJ-110 PLANS FOR PARKING GARAGE ROUTING. VERIFY EXISTING CONDUITS PRIOR TO BID.

1 ELECTRICAL SITE CCTV AND EMERGENCY CALLBOX PLAN

SCALE: 1" = 20'-0"

N

20' 0' 20' 40'

GRAPHIC SCALE

REV.	DATE	BY	SUB	APP.	DESCRIPTION
1	20150811				REISSUED FOR BID
P	20130628				ISSUED FOR BID

DESIGNED: SCH/TK
DRAWN: DM
CHECKED: C. KENT
APPROVED: C. KENT
DATE: 20130105

REGISTERED PROFESSIONAL ENGINEER JOSE L. NG No. E 17369 Exp. 9-30-16 ELECTRICAL STATE OF CALIFORNIA

SAN FRANCISCO BAY AREA RAPID TRANSIT DISTRICT

WHM INC. — SUBMITTED

PGAdesign, INC. — APPROVED

MACARTHUR BART PLAZA REPLACEMENT

ELECTRICAL SITE CCTV AND EMERGENCY CALLBOX PLAN

CADD FILENAME: E103.DWG
SIZE: D
SCALE: NONE
CONTRACT NO. 17AJ-120
REV. P
CONTRACT SHEET NO. E103
PAGE NO. -

LIGHTING

CEILING	WALL	DESCRIPTION
		SURFACE MOUNTED FIXTURE
R	R	RECESSED FIXTURE
X	X	SURFACE EXIT LIGHT
RX	RX	RECESSED EXIT LIGHT
B	B	BLANKED FIXTURE OUTLET
J	J	JUNCTION BOX
L	L	FIXTURE OUTLET CONTROLLED BY LOW VOLTAGE SWITCHING WHEN RELAY IS INSTALLED IN OUTLET BOX
		STREET LIGHT STANDARD FED FROM UNDERGROUND CIRCUIT.
		SURFACE FLUORESCENT FIXTURE
OR	OR	RECESSED FLUORESCENT FIXTURE
		SURFACE CONTINUOUS–ROW FLUORESCENT FIXTURE
OR		RECESSED CONTINUOUS–ROW FLUORESCENT FIXTURE
		FLOODLIGHT, ARROWS INDICATE DIRECTION AND NUMBER OF LAMPS
		DENOTES – EMERGENCY BATTERY PACK WITH SEALED BEAM LIGHTS
b		SUBSCRIPT b NEAR FIXTURE INDICATES SWITCH CIRCUIT

RECEPTACLE OUTLETS

CEILING	WALL	DESCRIPTION
		SINGLE RECEPTACLE OUTLET
		DUPLEX RECEPTACLE OUTLET
GFI		DUPLEX RECEPTACLE WITH GROUND FAULT INTERRUPTER
30A–2P		SINGLE SPECIAL–PURPOSE RECEPTACLE OUTLET (30 AMP. 2 POLE, OR AS NOTED)
		DUPLEX SPECIAL–PURPOSE RECEPTACLE OUTLET
		SPECIAL–PURPOSE CONNECTION OR PROVISION FOR CONNECTION. USE SUBSCRIPT LETTERS TO INDICATE FUNCTION(FC–FARE COLLECTION, ETC.)
C	C	CLOCK HANGER RECEPTACLE
F	F	FAN HANGER RECEPTACLE
		FLOOR OUTLET WITH SINGLE RECEPTACLE
		FLOOR OUTLET WITH DUPLEX RECEPTACLE
		FLOOR OUTLET–SPECIAL PURPOSE
		FLOOR OUTLET–PUBLIC TELEPHONE
		FLOOR OUTLET–PRIVATE TELEPHONE
UF		UNDERFLOOR DUCT AND JUNCTION BOX FOR TRIPLE, DOUBLE OR SINGLE DUCT SYSTEM AS INDICATED BY THE NUMBER OF PARALLEL LINES.
		CELLULAR FLOOR HEADER DUCT

SWITCH OUTLETS

SYMBOL	DESCRIPTION
S	SINGLE–POLE SWITCH
S_2	DOUBLE–POLE SWITCH
S_3	THREE–WAY SWITCH
S_4	FOUR–WAY SWITCH
S_D	DOOR SWITCH
S_K	KEY OPERATED SWITCH
S_P	SWITCH WITH PILOT LIGHT
S_L	SWITCH FOR LOW VOLTAGE SWITCHING SYSTEM
S_{LM}	MASTER SWITCH FOR LOW VOLTAGE SWITCHING SYSTEM
S_{MC}	MOMENTARY CONTACT SWITCH OR PUSHBUTTON FOR OTHER THAN SIGNALLING SYSTEM.
S_M	MANUAL MOTOR OVERLOAD SWITCH
S_T	TIME SWITCH
S_b	SUBSCRIPT "b" DENOTES SWITCH CIRCUIT
S_{DM}	DIMMER SWITCH

FIRE ALARM SYSTEM

CEILING	WALL	DESCRIPTION
	1	CONTROL PANEL
	2	PULL STATION
3	3	BELL
4	4	HORN/STROBE OR COMBINATION
	5	ANNUNCIATOR
	6	WATER FLOW ALARM TRIP
	7	FIREHOSE CABINET TRIP
8 H	8 H	DETECTOR, H–HEAT, S–SMOKE, C–COMBUSTIBLE PRODUCTS
	9	VALVE MONITOR ALARM

ELECTRIC CLOCK SYSTEM

SYMBOL	DESCRIPTION
1	MASTER CLOCK
2	SECONDARY – FLUSH
3	DOUBLE DIAL – WALL BRACKET MOUNTED
4	DOUBLE DIAL – CEILING BRACKET MOUNTED

TELEPHONE SYSTEM

SYMBOL	DESCRIPTION
2	PABX TELEPHONE
4	EMERGENCY TELEPHONE
5	MASTER STATION INTERCOMM. TELEPHONE
6	STATION INTERCOMM. TELEPHONE
7	COURTESY TELEPHONE
	PUBLIC TELEPHONE

SOUND SYSTEM

SYMBOL	DESCRIPTION
1	AMPLIFIER
2	MICROPHONE
3	INTERIOR SPEAKER
4	EXTERIOR SPEAKER
5	AMBIENT SOUND MONITOR
5	INDICATES CEILING MOUNTED

OTHER SIGNAL SYSTEMS

SYMBOL	DESCRIPTION
1	BUZZER
2	BELL
3	PUSHBUTTON
4	ANNUNCIATOR
5	DOOR OPENER
6	ALARM TRIP

VISUAL COMMUNICATION SYSTEM

SYMBOL	DESCRIPTION
TV	CCTV CAMERA OUTLET
DS	TRAIN DESTINATION SIGN

PANELBOARDS AND CONTROLLERS

FLUSH	SURFACE	DESCRIPTION
		480/277V LIGHTING PANELBOARD
		208/120V AC DISTRIBUTION PANELBOARD
		240/120V AC DISTRIBUTION PANELBOARD
TC	TC	TERMINAL CABINET
		480V POWER PANEL
		CONTROLLER
		LOCAL MOTOR STARTER WITH DISCONNECT
M M47		MOTOR, WITH IDENTIFICATION
X X2		TRANSFORMER, WITH IDENTIFICATION
		MOTOR CONTROL CENTER, 3 VERTICAL SECTIONS

REMOTE CONTROL

SYMBOL	DESCRIPTION
	CONTROL STATION
F	FLOAT SWITCH – MECHANICAL
L	LIMIT SWITCH – MECHANICAL
P	PRESSURE SWITCH – MECHANICAL
	ELECTRIC EYE – BEAM SOURCE
	ELECTRIC EYE – RELAY
T	THERMOSTAT

CONDUCTORS AND CONDUIT

SYMBOL	DESCRIPTION
– – –F– –	CONDUIT CONCEALED IN FLOOR
– – – – –	CONDUIT CONCEALED IN CEILING OR WALL
————	CONDUIT EXPOSED
	CONDUIT CAPPED
	CONDUIT TURNED TOWARDS OBSERVER
	CONDUIT TURNED AWAY FROM OBSERVER
1"C, 3–#10	CONDUIT AND WIRE SIZES, WHERE SIZE IS NOT SHOWN, MINIMUM SIZE AS PER SPECIFICATION
L2–1,2,3	BRANCH CIRCUIT HOME RUN TO PANELBOARD. NUMERALS IDENTIFY CIRCUIT NUMBER. L2 INDICATES TO PANEL L2.
////	INDICATES NUMBER OF WIRES. NO CROSS LINES INDICATES 2–#12 WIRES, UNLESS OTHERWISE NOTED
—— PA ——	LETTERS INDICATE SYSTEM: TV – TELEVISION; FC – FARE COLLECTION; T – PUBLIC TELEPHONE; PA – PUBLIC ADDRESS; IC – INTERCOMM; FA – FIRE ALARM; S – SIGNAL; ET – EMERGENCY TELEPHONE; E – EMERGENCY CIRCUIT; TB – PABX
— – —	UNDERGROUND CONCRETE ENCASED DUCT BANK (TYPE, SIZE & NUMBER OF CONDUITS INDICATED BY CROSS SECTION IDENTIFICATION OF EACH RUN OR BY NOTATION)
— – – – G –	GROUND CABLE – EXPOSED
	UNDERGROUND GROUND CABLE WITH EXOTHERMIC CONNECTION
	GROUND ROD
M MH101	MANHOLE WITH IDENTIFICATION
H HH101	HANDHOLE WITH IDENTIFICATION
PB PB47	PULL BOX WITH IDENTIFICATION AND SIZE

FIXTURE TYPE

+12' A1 100

+20' M1 400

+12' F1 2–40

a. LETTER–NUMBER ABOVE CENTER BAR INDICATES TYPE OF FIXTURE
   - A = INCANDESCENT
   - F = FLUORESCENT
   - M = MERCURY–VAPOR
   - S = HIGH PRESSURE SODIUM
   - H = METAL HALIDE

b. SINGLE NUMBER BELOW THE CENTER BAR INDICATES LAMP WATTAGE

c. IF TWO NUMBERS ARE BELOW THE CENTER BAR, THE NUMBER TO THE LEFT INDICATES NUMBER OF LAMPS AND THE NUMBER TO THE RIGHT INDICATES LAMP WATTAGE.

d. NUMBER ABOVE SYMBOL INDICATES THE HEIGHT ABOVE FINISHED FLOOR TO BOTTOM OF FIXTURE.

SPECIAL IDENTIFICATION
(USED ADJACENT TO SYMBOL)

WP – WEATHER PROOF; WT – WATER TIGHT; VT – VAPOR TIGHT; RT – RAIN TIGHT; DT – DUST TIGHT; EP – EXPLOSION PROOF; G – GROUND; R – RECESSED

+7'–6" (e.g.) MOUNTING HEIGHT TO ℄ OF OUTLET ABOVE FINISH FLOOR

REV.	DATE	BY	CHKD.	APP.	DESCRIPTION
00	08/04				DRAWN PER BECO EM001151

THIS DRAWING IS INTENDED SOLELY FOR BART USE IN ORDER TO DESIGN, CONSTRUCT, ALTER, OR MAINTAIN ITS FACILITIES. BART DOES NOT RECOMMEND OR WARRANT USE OF THE DRAWING FOR ANY OTHER PURPOSE. USE OF THE DRAWING BEYOND THE INTENDED PURPOSE WILL BE AT USER'S OWN RISK.

REGISTERED PROFESSIONAL ENGINEER MACARTHUR G. GINES No. E9570 Exp. 9-30-06 ELECTRICAL STATE OF CALIFORNIA

BART

DESIGNED: BATC	DATE: 09/91
DRAWN:	
CHECKED:	
APPROVED:	

BART FACILITIES STANDARDS ELECTRICAL

LAYOUT SYMBOLS

REF. NO.	ES01
SIZE: D	SCALE: NONE
CONTRACT	REV. 00
SHEET NO. ES01	PG. NO.

SCHEMATIC DIAGRAM SYMBOLS

SYMBOL	DESCRIPTION
	TRANSFORMER
LO	PUSH BUTTON SWITCH, MOMENTARY CONTACT, N.C. LO INDICATES LOCK–OUT
	PUSH BUTTON SWITCH, MOMENTARY CONTACT, N.O.
	MECHANICAL CONNECTION
15A	SINGLE POLE CIRCUIT BREAKER, SIZE AS INDICATED
	NORMALLY OPEN CONTACT, AUXILIARY OR RELAY
	NORMALLY CLOSED CONTACT, AUXILIARY OR RELAY
TC	TIMED CONTACT, N.O., TIME CLOSING ON ENERGIZING (OPENS INSTANTLY ON DE–ENERGIZING)
TC	TIMED CONTACT, N.C., OPENS INSTANTLY ON ENERGIZING (TIME CLOSING ON DE–ENERGIZING)
TO	TIMED CONTACT, N.O., CLOSES INSTANTLY ON ENERGIZING (TIME OPENING ON DE–ENERGIZING)
TO	TIMED CONTACT, N.C., TIME OPENING ON ENERGINZING (CLOSES INSTANTLY ON DE–ENERGIZING)
	OVERLOAD RELAY CONTACTS
50A	FUSE, SIZE AS NOTED
	GROUND CONNECTION
R	PILOT LIGHT: R=RED, G=GREEN, A=AMBER, W=WHITE
	SOLENOID VALVE
	LIMIT SWITCH, NORMALLY OPEN
	LIMIT SWITCH, NORMALLY CLOSED
	LIMIT SWITCH, N.O., HELD CLOSED BY ACTUATOR
	LIMIT SWITCH, N.C., HELD OPEN BY ACTUATOR
	PRESSURE SWITCH, NORMALLY OPEN, CLOSES ON RISING PRESSURE
	PRESSURE SWITCH, NORMALLY CLOSED, OPENS ON RISING PRESSURE
	FLOW SWITCH, NORMALLY OPEN, CLOSES WITH FLOW
	FLOW SWITCH, NORMALLY CLOSED, OPENS WITH FLOW
	TEMPERATURE SWITCH, CLOSES ON RISING TEMPERATURE (COOLING THERMOSTAT)
	TEMPERATURE SWITCH, OPENS ON RISING TEMPERATURE (HEATING THERMOSTAT)
	LEVEL CONTROLER (SWITCH), NORMALLY OPEN AT LOW POSITION, CLOSES ON RISE
	LEVEL CONTROLLER (SWITCH), NORMALLY CLOSED AT LOW POSITION, OPENS ON RISE

SYMBOL	DESCRIPTION
H, OFF, A	SELECTOR SWITCH, HAND–OFF–AUTOMATIC, OR AS NOTED K=KEY OPERATED (STANDARD OR HEAVY DUTY INDUSTRIAL CONTROL)
	SELECTOR SWITCH (WAFER TYPE)
	COIL, OPERATING
	DISCONNECTING SWITCH
	MULTICONDUCTOR CABLE
	SHIELDED 2 CONDUCTOR CABLE WITH SHIELD GROUNDED
	COAXIAL CABLE
	DISCONNECTING DEVICE
	CONDUCTORS CONNECTED
	CONDUCTORS, NOT CONNECTED
	CURRENT TRANSFORMER WITH POLARITY MARKINGS
	POTENTIAL TRANSFORMER WITH POLARITY MARKINGS
	OUTLINE OF EQUIPMENT
	FUTURE OR N.I.C.
	TERMINAL STRIP, WITH 3 WIRES TERMINATED
	WIRING TERMINAL
	BATTERY
A	INDICATING LIGHT A AMBER G GREEN R RED W WHITE

SINGLE LINE DIAGRAM SYMBOLS

SYMBOL	DESCRIPTION
	3ø, 3 WIRE DELTA TRANSFORMER CONNECTION
	3ø WYE, GROUNDED NEUTRAL TRANSFORMER CONNECTION
	CABLE POTHEAD
	GROUND
	SINGLE UNIT DRAW–OUT CIRCUIT BREAKER WITH CURRENT LIMITERS
	DRAW–OUT CIRCUIT BREAKER AND CURRENT LIMITER MOUNTED IN SEPARATE COMPARTMENT WITH MECHANICAL AND ELECTRICAL INTERLOCK
100/70 101	CIRCUIT BREAKER, DRAW–OUT TYPE, CURRENT TRIP VALUE INDICATED BELOW LINE AND BREAKER FRAME SIZE ABOVE LINE
1000/900 101	MOLDED CASE CIRCUIT BREAKER, CURRENT TRIP VALUE INDICATED BELOW LINE AND BREAKER FRAME SIZE ABOVE LINE
101	CIRCUIT BREAKER, MAGNETIC OVERLOAD TYPE, CURRENT TRIP VALUE INDICATED BELOW LINE AND BREAKER FRAME SIZE ABOVE LINE
100 4	COMBINATION MOTOR STARTER CIRCUIT BREAKER AND STARTER SIZE AS INDICATED
30A 101	SWITCH, NON FUSED
30A 101	SWITCH, FUSED
X01 750 KVA, 3ø, 4W 277/480V OR 120/208V	TRANSFORMER, WITH IDENTIFICATION RATING, PHASE, AND VOLTAGE INDICATED

SYMBOL	DESCRIPTION
	PRIMARY OIL FUSE CUTOUT
2400/120 2	POTENTIAL TRANSFORMER WITH NUMBER AND RATIO AS INDICATED
100:5 3	CURRENT TRANSFORMER WITH NUMBER AND RATIO AS INDICATED
	CONDUCTORS, CONNECTED
M MP101	MOTOR, NUMBER INDICATES H.P. IDENTIFICATION NUMBER
	NETWORK PROTECTION
	BUS
	REACTOR
A	AMMETER
V	VOLTMETER
KW	KILOWATT METER
KWH	KILOWATTHOUR METER
PF	POWER FACTOR METER
50/51	INSTANTANEOUS OVERCURRENT AND A–C TIME OVERCURRENT RELAYS
51N	NEUTRAL A–C TIME OVERCURRENT RELAYS
K	KEY INTERLOCK
VS	VOLTMETER SWITCH
AS	AMMETER SWITCH
CS	CONTROL SWITCH

REV.	DATE	BY	CHKD.	APP.	DESCRIPTION
00	08/04				DRAWN PER BECO EM001151

THIS DRAWING IS INTENDED SOLELY FOR BART USE IN ORDER TO DESIGN, CONSTRUCT, ALTER, OR MAINTAIN ITS FACILITIES. BART DOES NOT RECOMMEND OR WARRANT USE OF THE DRAWING FOR ANY OTHER PURPOSE. USE OF THE DRAWING BEYOND THE INTENDED PURPOSE WILL BE AT USER'S OWN RISK.

REGISTERED PROFESSIONAL ENGINEER MACARTHUR G. GINES No. E9570 Exp. 9-30-06 ELECTRICAL STATE OF CALIFORNIA

BART

DESIGNED: BATC	DATE: 09/91
DRAWN:	
CHECKED:	
APPROVED:	

BART FACILITIES STANDARDS ELECTRICAL

DIAGRAM SYMBOLS

REF. NO.	ES02
SIZE: D	SCALE: NONE
CONTRACT	REV. 00
SHEET NO. ES02	PG. NO.

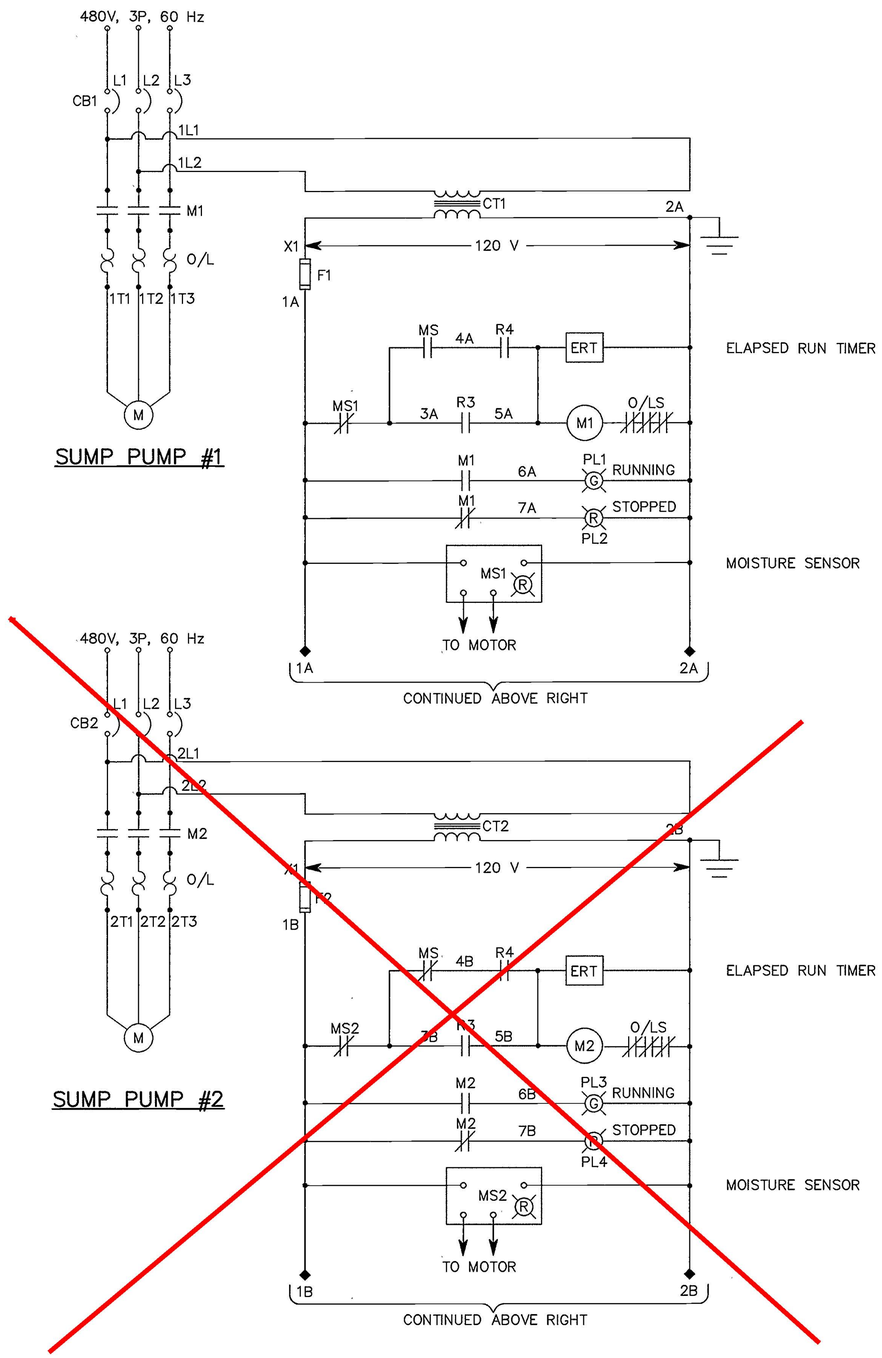

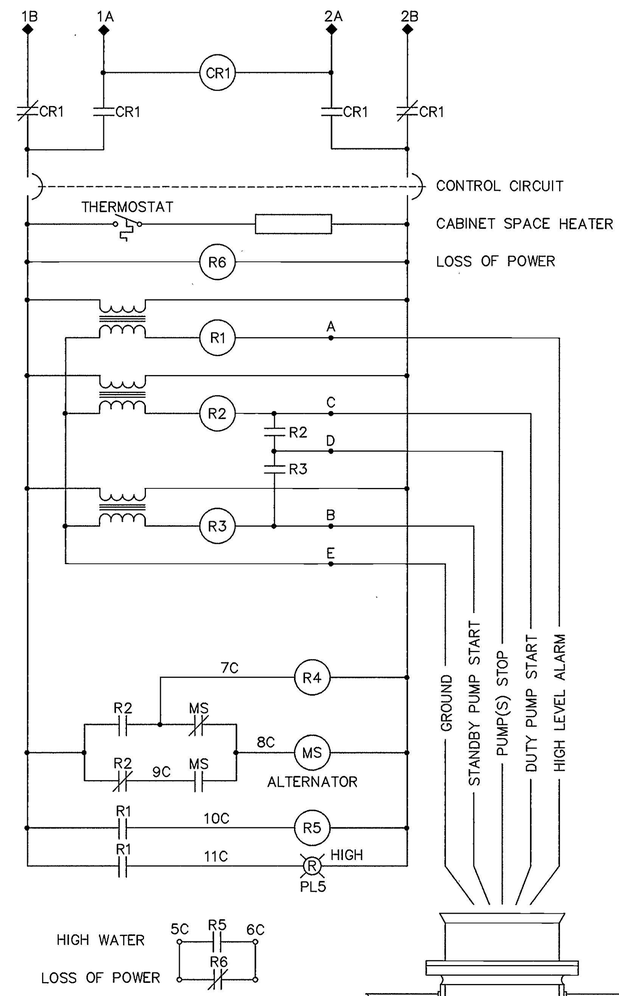

CONTACTS FOR REMOTE ALARM "SUMP PUMP TROUBLE"

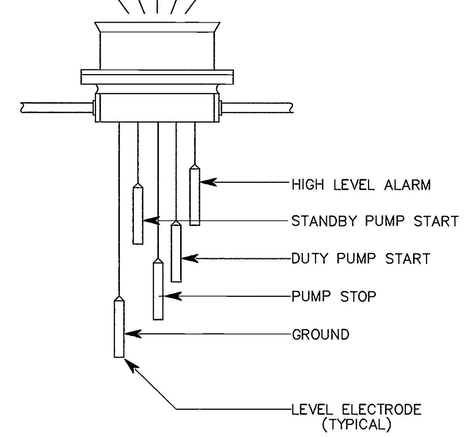

NOTES:

1. THE ALTERNATOR OPERATES FIRST ONE PUMP AND THEN THE OTHER ON EACH SUCCESSIVE STARTING OF PUMPING CYCLE.
2. WITH ONE PUMP RUNNING, IF MOISTURE IS PRESENT IN MOTOR, AN OVERLOAD RELAY TRIPS, OR THE STARTER IS DE-ENERGIZED FOR ANY REASON, THE OTHER PUMP WILL AUTOMATICALLY BE STARTED. IF THE PUMP SATISFIES THE DEMAND AND IS SHUT OFF, IT WILL RESTART AT THE BEGINNING OF NEXT PUMPING CYCLE.

SUMP PUMP CONTROL DIAGRAM

DETAIL 1 / ES23

SCALE: NTS

REV.	DATE	BY	CHKD.	APP.	DESCRIPTION
00	08/04				DRAWN PER BECO EM001151

THIS DRAWING IS INTENDED SOLELY FOR BART USE IN ORDER TO DESIGN, CONSTRUCT, ALTER, OR MAINTAIN ITS FACILITIES. BART DOES NOT RECOMMEND OR WARRANT USE OF THE DRAWING FOR ANY OTHER PURPOSE. USE OF THE DRAWING BEYOND THE INTENDED PURPOSE WILL BE AT USER'S OWN RISK.

REGISTERED PROFESSIONAL ENGINEER — MACARTHUR C. STINES — No. E5570 — Exp. 9-30-06 — ELECTRICAL — STATE OF CALIFORNIA

BART

DESIGNED: BATC — DATE: 09/91

DRAWN:

CHECKED:

APPROVED:

BART FACILITIES STANDARDS ELECTRICAL

SUMP PUMPS
DUPLEX PUMP ARRANGEMENT

REF. NO. ES23

SIZE: D — SCALE: NONE

CONTRACT — REV. 00

SHEET NO. ES23 — PG. NO.

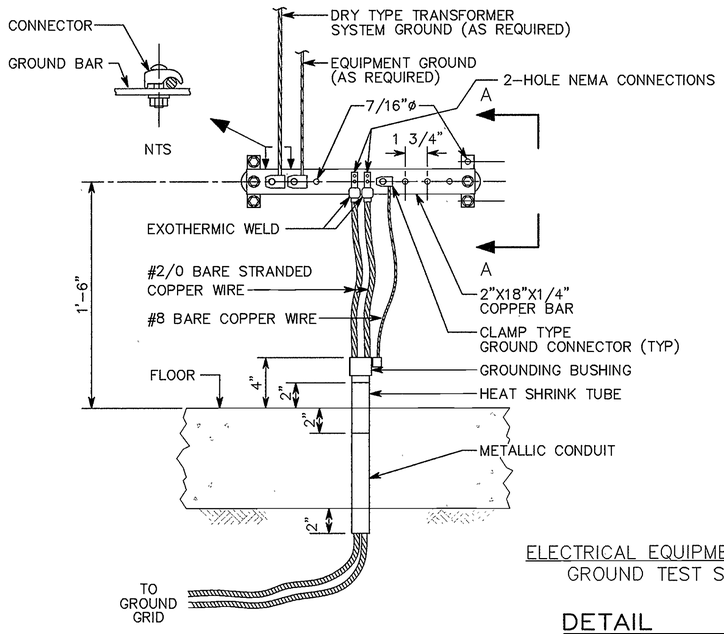

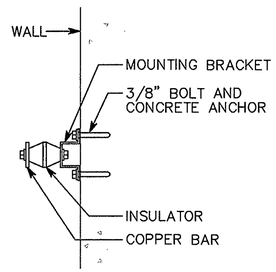

SECTION A–A

ELECTRICAL EQUIPMENT ROOMS
GROUND TEST STATION

DETAIL 1 ES41
SCALE: 2"=1'-0"

REV.	DATE	BY	CHKD.	APP.	DESCRIPTION
00	08/04				DRAWN PER BECO EM001151

THIS DRAWING IS INTENDED SOLELY FOR BART USE IN ORDER TO DESIGN, CONSTRUCT, ALTER, OR MAINTAIN ITS FACILITIES. BART DOES NOT RECOMMEND OR WARRANT USE OF THE DRAWING FOR ANY OTHER PURPOSE. USE OF THE DRAWING BEYOND THE INTENDED PURPOSE WILL BE AT USER'S OWN RISK.

REGISTERED PROFESSIONAL ENGINEER MACARTHUR C. STAGS No. E9570 Exp. 9-30-04 ELECTRICAL STATE OF CALIFORNIA

BART

DESIGNED: BATC	DATE: 09/91	
DRAWN:		
CHECKED:		
APPROVED:		

BART FACILITIES STANDARDS
ELECTRICAL

GROUND TEST STATIONS

REF. NO.	ES41
SIZE: D	SCALE: NOTED
CONTRACT	REV. 00
SHEET NO. ES41	PG. NO.

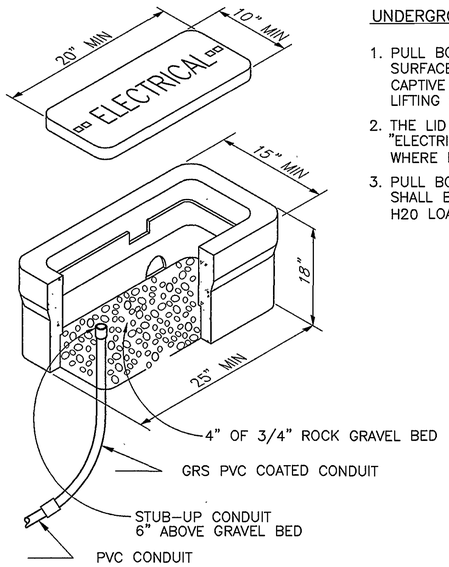

UNDERGROUND PULL BOX-ELECTRICAL

DETAIL 1 / ES77
SCALE: NTS

UNDERGROUND PULL BOX NOTES:

1. PULL BOX LIDS SHALL HAVE A NON-SKID SURFACE BOLTED DOWN WITH STAINLESS STEEL CAPTIVE BOLT. LIDS SHALL BE PROVIDED WITH LIFTING SLOTS.
2. THE LID COVER INSCRIPTION OF "ELECTRICAL" SHALL BE CAST IN PULL BOXES WHERE INDICATED IN THE DRAWING.
3. PULL BOXES ON ROADWAYS AND PARKING LOTS SHALL BE THE HEAVY DUTY TRAFFIC BOX FOR H20 LOADING.

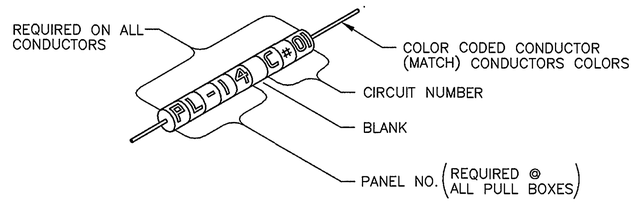

(ALL CONDUCTORS INCLUDING INDIVIDUAL NEUTRALS AND GROUNDS SHALL BE LABELED INSIDE PULL BOXES, HANDHOLES OF LIGHT POLES AND TERMINATION POINTS)

CONDUCTOR IDENTIFICATION BAND

DETAIL 3 / ES77
SCALE: NTS

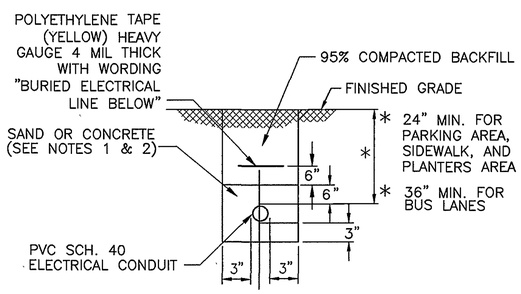

BACKFILLING DETAIL FOR ELECTRICAL TRENCHES

DETAIL 2 / ES77
SCALE: NTS

GENERAL NOTES:

1. CONDUIT ENCASED IN SAND FOR TRENCHES UNDER SIDEWALK AND PLANTERS AREA.
2. CONDUIT ENCASED IN CONCRETE FOR TRENCHES UNDER ROADWAYS AND PARKING LOT.
3. CONTRACTOR TO STENCIL THE POLE NUMBERS USING PAINT FOR GALVANIZED SURFACES. I.D. NUMBERS SHALL BE PAINTED WITH THE CENTERLINE OF THE TEXT 3" ABOVE THE TOP OF THE HANDHOLE COVER.
4. ALL MOUNTING HARDWARE MATERIALS SHALL BE HOT-DIPPED GALVANIZED.

REV.	DATE	BY	CHKD.	APP.	DESCRIPTION
00	08/04				DRAWN PER BECO EM001151

THIS DRAWING IS INTENDED SOLELY FOR BART USE IN ORDER TO DESIGN, CONSTRUCT, ALTER, OR MAINTAIN ITS FACILITIES. BART DOES NOT RECOMMEND OR WARRANT USE OF THE DRAWING FOR ANY OTHER PURPOSE. USE OF THE DRAWING BEYOND THE INTENDED PURPOSE WILL BE AT USER'S OWN RISK.

REGISTERED PROFESSIONAL ENGINEER MACARTHUR E. GIMES No. E9570 Exp. 9-30-06 ELECTRICAL STATE OF CALIFORNIA

BART

DESIGNED: DATE:
DRAWN:
CHECKED:
APPROVED:

BART FACILITIES STANDARDS ELECTRICAL

ELECTRICAL LIGHTING DETAILS

REF. NO.
SIZE: D SCALE: NONE
CONTRACT REV. 00
SHEET NO. ES77 PG. NO.

NOTE:
SEE SHEETS U201, U202 AND U203 FROM THE FULL FRONTAGE ROAD PERMIT SET FOR INFORMATION REGARDING JOINT TRENCH DETAILS. JOINT TRENCH CONDUITS ARE NOT INCLUDED IN THIS CONTRACT. ELECTRICAL CONTRACTOR SHALL PROVIDE CONDUCTORS AND CABLING IN EXISTING JOINT TRENCH CONDUITS. SEE CONTRACT 17AJ-110 PLANS FOR PARKING GARAGE ROUTING.

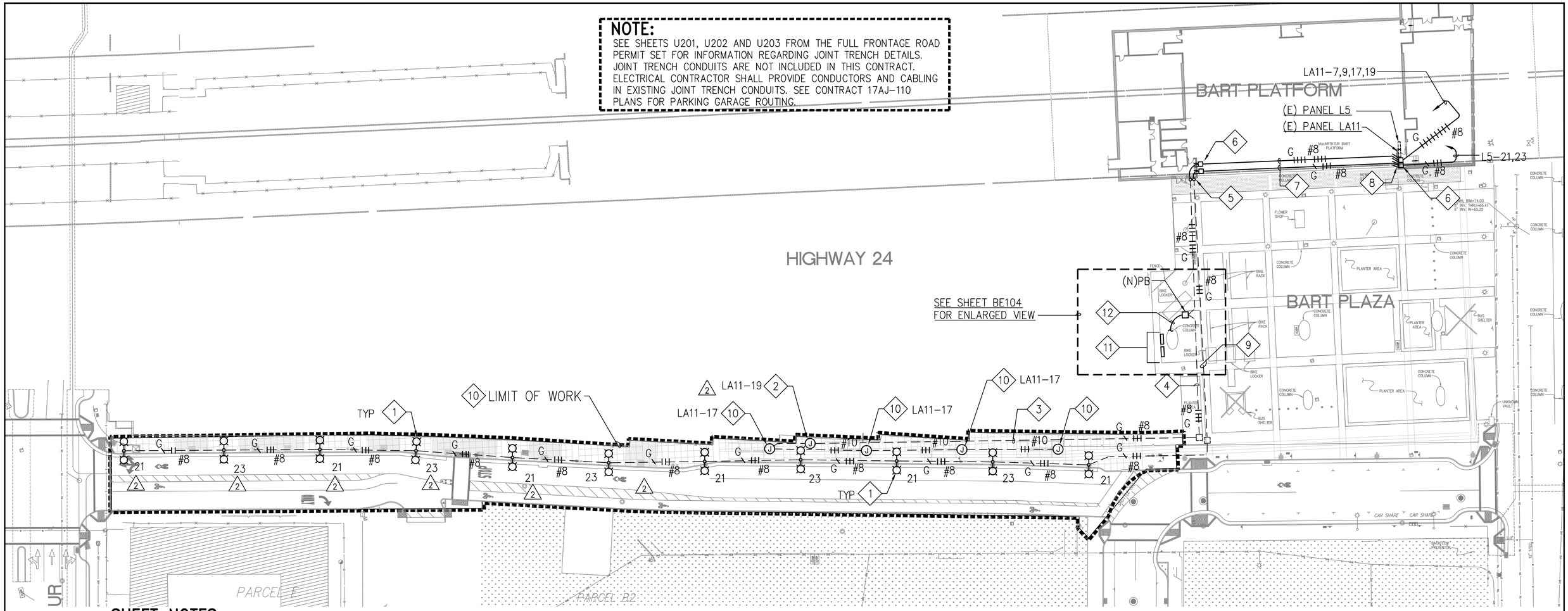

SHEET NOTES

1. NEW LIGHTING POLE, BASE AND HEAD. SEE PLANS E201 THRU E204 FOR MOUNTING DETAILS AND FIXTURE TYPES. TYPICAL OF 12.
2. WEATHERPROOF JUNCTION BOX FOR 120V POWER CIRCUIT LA11-19 FOR EMERGENCY CALL BOX CONNECTION. VERIFY EXACT LOCATION AND COORDINATE REQUIREMENTS WITH MANUFACTURER.
3. EXISTING 1" UNDERGROUND CONDUIT. PROVIDE 4#8 FOR 120V POWER TO EMERGENCY CALL BOX AND NEXTBUS TRANSMITTERS. SEE DETAIL 1, SHEET BE002.
4. EXISTING 1 1/2" UNDERGROUND CONDUIT. PROVIDE 3#8 120V POWER FOR NEXBUS SYSTEM AND EMERGENCY CALL BOX. SEE SHEET BE002.
5. VERIFY ROUTING AND AMOUNT OF CONDUITS. CONDUITS ROUTING PROVIDED UNDER MTV SITE DEVELOPMENT STAGE B.
6. PROVIDE NEW PULLBOXES AS SHOWN. SEAL AFTER INSTALLATION OF NEW CONDUITS.
7. CONTINUE CONDUITS AND WIRING FROM NOTES 4 AND 9 ABOVE SUSPENDED CEILING IN CRAWL SPACE.
8. CORE DRILL WALL FOR PASSAGE OF NEW CONDUITS. SEAL AFTER INSTALLATION OF NEW CONDUITS.
9. EXISTING 2" UNDERGROUND CONDUIT FOR NEW FRONTAGE ROADWAY LIGHTING. PROVIDE NEW CONDUCTORS AS SHOWN.
10. WEATHERPROOF JUNCTION BOX AND 120V POWER CIRCUIT LA11-17 TO NEXTBUS TRANSMITTER, 55 WATTS EACH. ELECTRICAL CONTRACTOR SHALL COORDINATE INSTALLATION WITH THE SYSTEM SUPPLIER AND PROVIDE ALL NECESSARY CONNECTIONS, WIRING AND CONTROL DEVICES PER SYSTEM MANUFACTURING INSTRUCTIONS. SEE DETAIL 4 ON BE015.
11. FIELD CONCENTRATOR CABINET AND POWER SUPPLY CONTROL PANEL FOR CCTV SYSTEM. VERIFY LOCATION WITH LANDSCAPE ARCHITECT. SEE DETAILS AND SPECIFICATIONS FOR REQUIREMENTS.
12. CONDUITS WITH 120V POWER CIRCUITS LA11-7,9 TO CCTV SYSTEM AND BIKE LOCKER RECEPTACLES. SEE DRAWING BE104 FOR MORE INFORMATION. CIRCUIT LA-7 IS FOR THE CCTV SYSTEM. CIRCUIT LA-9 IS FOR BIKE LOCKER RECEPTACLES.

THIS DRAWING IS PROVIDED FOR REFERENCE ONLY

BID SET NOTE:
1. THIS SET IS FOR BIDDING PURPOSED ONLY. CONSTRUCTION SHALL BE DONE PER THE REQUIREMENTS OF THE PERMIT SET ONLY. SEE KEY PLAN TO IDENTIFY APPROXIMATE PERMIT SETS.
2. THIS BID SET COMBINES 3 PERMIT SETS. SEE KEY MAP (BID1) FOR DIVISION OF SHEETS BY PERMIT. PREFIXES (B, C, AND P) HAVE BEEN ADDED TO THE SHEETS FOR CLARITY, BUT CALLOUTS STILL CALL TO THE ORIGINAL SHEET NUMBERS FROM THE ORIGINAL SETS.

1 ELECTRICAL SITE LIGHTING AND POWER PLAN

SCALE: 1" = 30'-0"

N

30' 0' 30' 60'
GRAPHIC SCALE

REV.	DATE	BY	SUB	APP.	DESCRIPTION
	20131206				BID SET
03	20130621				BULLETIN 04
02	20130612				BULLETIN 03
					CONFORMED

DESIGNED: SCH/TK
DRAWN: DM
CHECKED:
APPROVED:
DATE: 20120706

REGISTERED PROFESSIONAL ENGINEER JOSE L. NE No. E 13360 Exp. 6-30-14 ELECTRICAL STATE OF CALIFORNIA

SAN FRANCISCO BAY AREA RAPID TRANSIT DISTRICT

WHM, INC. — SUBMITTED

SANDIS — APPROVED

MACARTHUR BART TRANSIT VILLAGE FRONTAGE ROAD CONSTRUCTION PHASE B2 BID SET
ELECTRICAL SITE LIGHTING AND POWER PLAN

CADD FILENAME: BE102.DWG
SIZE: D — SCALE: 1"=30'-0"
CONTRACT NO. 17AJ-130 — REV. C
CONTRACT SHEET NO. BE102 — PAGE NO. 058

EXHIBIT S

SPECIFICATIONS

Please see pages 4-5 of the RFP

SAN FRANCISCO BAY AREA
RAPID TRANSIT DISTRICT

CONTRACT BOOK

FOR
MACARTHUR BART STATION - PLAZA REDESIGN

CONTRACT NO. 17AJ-120
ISSUED FOR BID – January 13, 2016

SAN FRANCISCO BAY AREA RAPID TRANSIT DISTRICT

CONTRACT SPECIFICATIONS

FOR

DESIGN AND CONSTRUCTION

OF

MACARTHUR BART STATION –

PLAZA REDESIGN

CONTRACT NO. 17AJ-120

January 13, 2016

Bid Set

CONTRACT NO.

THE SPECIFICATIONS CONTAINED HEREIN HAVE BEEN PREPARED UNDER THE DIRECTION OF THE FOLLOWING LICENSED INDIVIDUALS:

LANDSCAPE ARCHITECT OF RECORD:
PGAdesign[inc]
444 17th Street
Oakland, CA 94612

_____
Christopher Kent, ASLA
PGAdesign[inc]

ELECTRICAL:
WHM, Inc.
1605 School Street
Moraga, CA 94556

_____
Stephan C. Hansmeyer, P.E.
WHM, Inc.

CONTRACT SPECIFICATIONS

THE FOLLOWING CONTRACT SPECIFICATIONS INVOKE, MODIFY, AND SUPPLEMENT THE BSF FACILITIES STANDARDS, STANDARD SPECIFICATIONS, RELEASE R2.1.1, DATED OCTOBER 2010. (BFS)

THE ORGANIZATION AND SEQUENCE OF ARTICLES AND SUBARTICLES IN THESE CONTRACT SPECIFICATIONS SECTIONS ARE ALIGNED WITH LIKE IDENTIFIED ARTICLES AND SUBARTICLES CONTAINED IN THE REFERENCED STANDARD SPECIFICATIONS SECTIONS.

ACCORDINGLY, ARTICLE (S) IN THESE CONTRACT SPECIFICATIONS WHICH SPECIFY MODIFCATIONS SHALL BE UNDERSTOOD TO MEAN MODIFICATIONS TO THE PROVISIONS CONTAINED IN LIKE NUMBERED AND TITLED ARTICLES IN THE REFERENCED STANDARD SPECFICATIONS SECTIONS.

CONTRACT SPECIFICATIONS
TABLE OF CONTENTS

DIVISION 1 – GENERAL REQUIREMENTS

Section	Title
01 11 00	Summary of Work
01 20 00	Price and Payment Procedures
01 31 19	Project Meetings
01 32 16	Construction Progress Schedules
01 32 33	Photographic Documentation
01 33 00	Submittal Procedures
01 33 23	Shop Drawings, Product Data and Samples
01 35 14	Operating System Interface
01 35 24	Construction Safety
01 42 19	Reference Standards
01 43 00	Quality Assurance
01 43 38	Field Samples and Mockups
01 45 00	Quality Control
01 45 24	Testing Program Requirements
01 51 00	Temporary Utilities
01 52 00	Construction Facilities
01 57 00	Temporary Controls
01 58 00	Project Identification
01 60 00	Product Requirements
01 64 13	District-Furnished Materials and Equipment
01 71 13	Mobilization
01 71 23	Field Engineering
01 74 14	Cleaning
01 74 21	Waste Management
01 77 00	Closeout Procedures
01 78 23	Operation and Maintenance Data
01 78 39	Project Record Documents
01 78 44	Spare Parts and Maintenance Materials
01 79 00	Demonstration Training

DIVISION 2 – EXISTING CONDITIONS

Section	Title
02 41 00	Demolition
02 41 19	Selective Structure Demolition

DIVISION 3 – CONCRETE

Section	Title
03 05 15	Portland Cement Concrete
03 11 00	Concrete Forming

03 15 00 Concrete Accessories
03 20 00 Concrete Reinforcing
03 30 00 Cast-In-Place Concrete
03 35 00 Concrete Finishing

DIVISION 4 – MASONRY

Section	Title

DIVISION 5 – METALS

Section	Title
05 05 22	Metal Welding
05 12 00	Structural Steel Framing
05 50 00	Metal Fabrications
05 70 00	Decorative Metal
05 80 00	Stainless Steel Station ID Pylon

DIVISION 6 – WOOD, PLASTICS, AND COMPOSITES

Section	Title

DIVISION 7 – THERMAL AND MOISTURE PROTECTION

Section	Title
07 60 00	Flashing and Sheet Metal
07 90 00	Joint Protection
07 95 00	Expansion Control

DIVISION 8 – OPENINGS

Section	Title
08 11 00	Metal Doors and Frames
08 71 00	Door Hardware

DIVISION 9 – FINISHES

Section	Title
09 91 00	Painting
09 96 33	Graffiti-Resistant Coatings

DIVISION 10 – SPECIALITIES

Section	Title
10 40 00	Safety Specialties

DIVISION 12 –FURNISHINGS

Section	Title
12 94 00	Site Furnishings

DIVISION 20– FACILITY SERVICES

Section	Title
20 10 13	Common Materials and Methods for Facility Services- Fire Suppression, Plumbing and HVAC "
20 20 13	Pipe Sleeves, Supports and Anchors for Facility Services
20 40 13	Identification for Facility Services
20 50 13	Raceways for Facility Services
20 50 16	Underground Ductwork and Structures for Facility Services
20 70 13	Common Materials and Methods for Electronic Services
20 70 26	Common Materials and Methods for Electrical Systems

DIVISION 21– FIRE SUPPRESSION

Section	Title

DIVISION 22– PLUMBING

Section	Title
22 13 01	Sanitary Sewage
22 14 01	Storm Drainage

DIVISION 26– ELECTRICAL

Section	Title
26 05 24	Low Voltage Wires and Cables
26 05 26	Grounding and Bonding for Electrical Systems
26 24 24	Circuit Breakers and Panelboards

26 50 00 Lighting

DIVISION 27– COMMUNICATIONS

Section **Title**

DIVISION 28– ELECTRONIC SAFETY AND SECURITY

Section **Title**
28 10 01 Access Control System
28 41 29 Closed Circuit Television System

DIVISION 31– EARTHWORK

Section **Title**
31 00 00 Earthwork
31 11 00 Clearing and Grubbing
31 50 00 Excavation Support and Protection

DIVISION 32– EXTERIOR IMPROVEMENTS

Section **Title**
32 11 17 Aggregate Subbase Courses
32 11 23 Aggregate Base Course
32 13 13 Concrete Paving
32 16 21 Concrete Curbs, Gutters, and Walks
32 84 00 Planting Irrigation

DIVISION 33– UTILITIES

Section **Title**
33 05 16 Utility Structures
33 05 25 Support and Protection of Utilities
33 05 28 Trenching and Backfilling for Utilities
33 40 00 Storm Drainage Utilities

SECTION 01 11 00

SUMMARY OF WORK

The provisions of BART Standard Specifications Section 01 11 00 Summary of Work shall apply to the Work as modified herein.

Modify Article 1.01 A2 as follows:

2. The BART Facilities Standards, Standard Specifications, Release R 2.1.1 dated October 2010 (BFS)

Modify Article 1.02, Contract Description, Completion Time, and Liquidate damages as follows:

1.02 CONTRACT DESCRIPTION

A. Contract Description: Design and construct a pedestrian plaza in Oakland with associated interfaces with the MacArthur BART Station, City of Oakland sidewalks, and CalTrans retaining walls. This work will be done on CalTrans property where BART has an existing easement. This work includes demolition of the existing MacArthur BART Plaza and constructing hardscape, bike station, bus shelters, site furnishings, relocating existing art work, cleaning and applying paint to CalTrans structures, resetting utility grades, and other site work in compliance with BART Facilities Standards for Station Support Facilities."

B. Completion Time: Pursuant to Article GC8.3 of the General Conditions, Contractor shall complete all work indicated, specified and directed to be performed under the Contract within ___ calendar days from the effective date of Notice to Proceed.

C. Liquidated Damages. The amount of Liquidated Damages to be assessed under the provisions of Article GC8.4.1 of the General Conditions. Is:

a. $5,000 for the first day or part thereof; and

b. $1,000 per day for each calendar day's delay in completing all work referred to in Article 1.02A above within the time specified in Article 1.02B.

Modify Article 1.03 Hours of Work as follows:

1.03 WORK ACCESS

A. Access to the work is to be arranged and scheduled by the Engineer who will provide assistance and direction for access as required. The Engineer will monitor their work and adherence to these specifications. Under no circumstances will Contractor personnel work within the District property without the presence of the Engineer or Engineer's representative. The Engineer's presence shall not relieve the Contractor of the responsibility for the performance of the Work.

B. Access to District facilities will only be permitted provided Contractor has received approval of work schedule. In addition, Contractor is to give the Engineer the following notifications:

1. 48-hour advance written notices prior to starting work at the jobsite.
2. If Contractor stops work at the jobsite for a period of one (1) workday or longer, written notice with 24 hours prior to resuming work at the jobsite.

C. Station elevators and escalators shall not be used to transport materials and debris.

Add Article 1.04 Work Area and Work Periods as follows:

1.04 WORK AREA AND WORK PERIODS

A. The work area required by Contractor for its use, parking, storage, etc., will be as designated by the Engineer. Access by workmen and delivery of all materials and equipment to each station is to be from areas designated by the Engineer.

B. Available work periods are from 7:00 .m. to 5:00 p.m., Monday through Friday.

C. Additional work time may be available at the time of construction. However, for bidding purposes, the hours specified in Article 1.04B above shall apply.

D. During Patron Revenue Operations Hours, all passages, stairs, elevators and escalators within the passenger stations will be in use by BART patrons and shall not be obstructed by Contractor's operations except as otherwise permitted by the Engineer. Patron Revenue Operations Hours are the time periods between 0400 hours and 2400, Monday through Friday, between 0600 hours and 2400, Saturday, and between 0800 hours and 2400 on Sunday.

Add Article 1.05 Contractor Security

1.05 CONTRACTOR SECURITY

Security at the work areas and Contractor's storage areas shall be the responsibility of the Contractor. Contractor shall take all measures to prevent at all time entry to the storage and work areas by animals or unauthorized persons.

1.06 MEASUREMENT AND PAYMENT

Separate measurement and payment will not be made for work required under this Section. All costs in connection with the work specified herein will be considered incidental to the work of this Contract.

END OF SECTION 01 11 00

SECTION 01 20 00

PRICE AND PAYMENT PROCEDURES

The provisions of BART Standard Specifications Section 01 20 00, Price and Payment Procedures shall apply to the Work.

END OF SECTION 01 20 00

SECTION 01 31 19

PROJECT MEETINGS

The provisions of BART Standard Specifications Section 01 31 19, Project Meetings shall apply to the Work.

END OF SECTION 01 31 19

SECTION 01 32 16

CONSTRUCTION PROGRESS SCHEDULES

The provisions of BART Standard Specifications Section 01 31 16, Construction Progress Schedules shall apply to the Work.

END OF SECTION 01 32 16

SECTION 01 32 33

PHOTOGRAPHIC DOCUMENTATION

The provisions of BART Standard Specifications Section 01 32 33, Photographic Documentation shall apply to the Work.

END OF SECTION 01 32 33

SECTION 01 33 00

SUBMITTAL PROCEDURES

The provisions of BART Standard Specifications Section 01 33 00, Submittal Procedures shall apply to the Work.

END OF SECTION 01 33 00

SECTION 01 33 23

SHOP DRAWINGS, PRODUCT DATA AND SAMPLES

The provisions of BART Standard Specifications Section 01 33 23, Shop Drawings, Product Data and Samples shall apply to the Work.

END OF SECTION 01 33 23

SECTION 01 35 14

OPERATING SYSTEM INTERFACE

The provisions of BART Standard Specifications Section 01 35 14, Operating System Interface shall apply to the Work.

END OF SECTION 01 35 14

SECTION 01 35 24

CONSTRUCTION SAFETY

The provisions of BART Standard Specifications Section 01 35 24, Construction Safety shall apply to the Work.

END OF SECTION 01 35 24

SECTION 01 42 19

REFERENCE STANDARDS

The provisions of BART Standard Specifications Section 01 42 19, Reference Standards shall apply to the Work.

END OF SECTION 01 42 19

SECTION 01 43 00

QUALITY ASSURANCE

The provisions of BART Standard Specifications Section 01 43 00 Quality Assurance shall apply to the Work.

END OF SECTION 01 43 00

SECTION 01 43 38

FIELD SAMPLES AND MOCKUPS

The provisions of BART Standard Specifications Section 01 43 38 Samples and Mockups shall apply to the Work.

END OF SECTION 01 43 38

SECTION 01 45 00

QUALITY CONTROL

The provisions of BART Standard Specifications Section 01 45 00 Quality Control shall apply to the Work.

END OF SECTION 01 45 00

SECTION 01 45 24

TESTING PROGRAM REQUIREMENTS

The provisions of BART Standard Specifications Section 01 45 24 Testing Program Requirements shall apply to the Work.

END OF SECTION 01 45 24

SECTION 01 51 00

TEMPORARY UTILITIES

The provisions of BART Standard Specifications Section 01 51 00 Temporary Utilities shall apply to the Work as modified herein.

Modify Article 1.05 as follows:

1.05 TEMPORARY ELECTRICAL AND WATER FACILITIES

Subject to the limitations of this Article, temporary water and electrical power (110 volts, 15 amp circuit) services will be available from existing outlets, designated by the Engineer, free of charge for use by the Contractor for Contract work provided that the Contractor does not misuse such services as determined by the Engineer and provided such utility services are operational. The Contractor shall make provisions for temporary extension from these existing facilities at its own cost and subject to the Engineer's approval. The Contractor shall provide its own source of electrical power if the District's source and voltage type is not compatible with its requirements.

END OF SECTION 01 51 00

SECTION 01 52 00

CONSTRUCTION FACILITIES

The provisions of BART Standard Specifications Section 01 52 00 Construction Facilities shall apply to the Work as modified herein.

1.04 TEMPORARY SANITARY FACILITIES

Public restrooms in the station are available to the Contractor, its employees, and all persons involved in the Work provided that Contractor does not misuse these facilities as determined by the Engineer.

1.05 Delete

1.06 Delete

1.12 TEMPORARY RIGID FENCING

1. Temporary Rigid Fencing will be required on the plaza to provide a visual and physical barrier surrounding the work at all times. The fencing will consist of 5/8 inch minimum plywood framed with 2 by 4 inch lumber. No wood preservatives are required but it will otherwise conform to SECTION 06 10 00 Rough Carpentry.

2. Temporary Rigid Fencing will be kept clean of graffiti with a uniform paint color. Color to be approved by Engineer

END OF SECTION 01 52 00

SECTION 01 57 00

TEMPORARY CONTROLS

The provisions of BART Standard Specifications Section 01 57 00 Temporary Controls shall apply to the Work.

END OF SECTION 01 57 00

SECTION 01 58 00

PROJECT IDENTIFICATION

The provisions of BART Standard Specifications Section 01 58 00 Project Identification shall apply to the Work.

END OF SECTION 01 58 00

SECTION 01 60 00

PRODUCT REQUIREMENTS

The provisions of BART Standard Specifications Section 01 60 00 Product Requirements shall apply to the Work.

END OF SECTION 01 60 00

SECTION 01 64 13

DISTRICT-FURNISHED MATERIALS AND EQUIPMENT

The provisions of BART Standard Specifications Section 01 64 13 District Furnished Materials and Equipment shall apply to the Work.

END OF SECTION 01 64 13

SECTION 01 71 13

MOBILIZATION

The provisions of BART Standard Specifications Section 01 71 13 Mobilization shall apply to the Work as modified herein.

1.03 MEASUREMENT AND PAYMENT:

Separate measurement or payment will not be made for work required under this Section. All costs in connection with the work specified herein will be considered to be included with the related item of work in the Bid Schedule of the Bid Form, or incidental o the Work.

1.08 Delete

END OF SECTION 01 71 13

SECTION 01 71 23

FIELD ENGINEERING

The provisions of BART Standard Specifications Section 01 71 23 Field Engineering shall apply to the Work.

END OF SECTION 01 71 23

SECTION 01 74 14

CLEANING

The provisions of BART Standard Specifications Section 01 74 14 Cleaning shall apply to the Work.

END OF SECTION 01 74 14

SECTION 01 74 21

WASTE MANAGEMENT

The provisions of BART Standard Specifications Section 01 74 21 Waste Management shall apply to the Work.

END OF SECTION 01 74 21

SECTION 01 77 00

CLOSEOUT PROCEDURES

The provisions of BART Standard Specifications Section 01 77 00 Closeout Procedures shall apply to the Work.

END OF SECTION 01 77 00

SECTION 01 78 23

OPERATION AND MAINTENANCE DATA

The provisions of BART Standard Specifications Section 01 78 23 Operation and Maintenance Data shall apply to the Work.

END OF SECTION 01 78 23

SECTION 01 78 39

PROJECT RECORD DOCUMENTS

The provisions of BART Standard Specifications Section 01 78 39 Project Record Documents shall apply to the Work.

END OF SECTION 01 78 39

SECTION 01 78 44

SPARE PARTS AND MAINTENANCE MATERIALS

The provisions of BART Standard Specifications Section 01 78 44 Spare Parts and Maintenance Materials shall apply to the Work.

END OF SECTION 01 78 44

SECTION 01 79 00

DEMONSTRATION TRAINING

The provisions of BART Standard Specifications Section 01 79 00 Demonstration Training hall apply to the Work.

END OF SECTION 01 79 00

SECTION 02 41 00

DEMOLITION

The provisions of BART Standard Specifications Section 02 41 00 Demolition shall apply to the Work.

END OF SECTION 02 41 00

SECTION 02 41 19

SELECTIVE STRUCTURE DEMOLITION

The provisions of BART Standard Specifications Section 02 41 19 Selective Structure Demolition shall apply to the Work.

PART 3 - EXECUTION

3.05 SALVAGING

A. Certain items, as indicated, shall be salvaged and used in the Work or delivered to a District storage facility as directed.

1. Salvage existing sculpture artwork, reinstalled per existing detail.

END OF SECTION 02 41 19

SECTION 03 05 15

PORTLAND CEMENT CONCRETE

The provisions of BART Standard Specifications Section 03 05 15 Portland Cement Concrete shall apply to the Work.

END OF SECTION 03 05 15

SECTION 03 11 00

CONCRETE FORMING

The provisions of BART Standard Specifications Section 03 11 00, Concrete Forming shall apply to the Work.

END OF SECTION 03 11 00

SECTION 03 15 00

CONCRETE ACCESSORIES

The provisions of BART Standard Specifications Section 03 15 00, Concrete Accessories shall apply to the Work.

END OF SECTION 03 15 00

SECTION 03 20 00

CONCRETE REINFORCING

The provisions of BART Standard Specifications Section 03 20 00, Concrete Reinforcing shall apply to the Work.

END OF SECTION 03 20 00

SECTION 03 30 00

CAST-IN-PLACE CONCRETE

The provisions of BART Standard Specifications Section 03 30 00, Cast-In-Place Concrete shall apply to the Work.

END OF SECTION 03 30 00

SECTION 03 35 00

CONCRETE FINISHING

The provisions of BART Standard Specifications Section 03 35 00 Concrete Finishing shall apply to the Work.

END OF SECTION 03 35 00

SECTION 05 05 22

METAL WELDING

The provisions of BART Standard Specifications Section 05 05 22 Metal Welding shall apply to the Work.

END OF SECTION 05 05 22

SECTION 05 12 00

STRUCTURAL STEEL FRAMING

The provisions of BART Standard Specifications Section 05 12 00 Structural Steel Framing shall apply to the Work as modified herein.

PART 1 – GENERAL

1.03 MEASUREMENT AND PAYMENT

Separate measurement or payment will not be made for work required under this Section. All cost in connection with the work specified herein will be considered to be included with the related item of work in the Bid Schedule of the Bid Form, or incidental to the Work.

END OF SECTION 05 12 00

SECTION 05 50 00

METAL FABRICATIONS

The provisions of BART Standard Specifications Section 05 50 00 Metal Fabrications shall apply to the Work as modified herein.

END OF SECTION 05 50 00

SECTION 05 70 00

DECORATIVE METAL

The provisions of BART Standard Specifications Section 05 70 00 Decorative Metal to apply to the Work as modified herein.

PART 1 - GENERAL

1.01 WORK INCLUDED

J. Stainless steel bench tubes

K. Stainless steel strip for concrete seatwall edge

L. Bike station

1.02 RELATED SECTIONS

A. Section 12 94 00: Site Furnishing

B. Section 32 13 13: Concrete Curbs, Gutters and Walks

PART 2 - PRODUCTS

2.01 Materials

A. Stainless steel tube or pipe:

1. Stainless Steel bench tube:

   a. Type 316 stainless steel; 12” inner diameter; seamless round pipe and 90 degree elbow; schedule 10; ASTM A240, A269, A312 and A554. As available from Keenan Supply, Oakland (510.261.8261) or approved equivalent.
   b. See Site Furnishings 12 94 00 for bench information.
   c. Provide latex rubber gasket for any interfaces of different metals on the bench assembly to prevent galvanic corrosion.

3. Stainless Steel strip for seatwall edge:

   a. Type 316; 1/8” thick; No. 4 brushed finish. See Layout Plan and Detail Drawing for dimensions. Conform to ASTM A167.

END OF SECTION 05 70 00

SECTION 05 80 00

STAINLESS STEEL STATION ID PYLON

The BART Standard Specifications are supplemented by the addition of the following new specification Section 05 80 00, Stainless Steel Station ID Pylon.

PART 1 – GENERAL

1.01 SECTION INCLUDES

A. This Section defines the requirements for fabricating and installing stainless steel station identification pylon to be installed at station street entrances as indicated.

1.02 MEASUREMENT AND PAYMENT (OPTION BID ITEM)

A. Measurement: Stainless steel station identification Pylon will be measured for payment as a lump-sum unit acceptably completed and accepted.

B. Payment: Stainless steel station identification signpost will be paid for as part of the Contract lump sum price Bid Item for Station ID Signage as indicated in the Bid Schedule of the Bid Form.

C. Prototype: Measurement and payment for Stainless Steel Station ID Pylon full size prototype will not be paid for separately. The work is considered incidental to the related item of work indicated in the Bid Schedule of the Bid Form for Station ID Signage.

1.03 SUBMITTALS

A. Product data for each product used, including finishing materials and methods.

B. Shop drawings showing fabrication and installation of Stainless Steel Pylon including plans, elevations and details of components and attachments to other units of Work. Indicate materials, profiles of each Stainless Steel Pylon member and fitting, joinery, finishes, fasteners, anchorages and accessory items.

1. Include setting drawings, templates, and directions for installation of anchor bolts and other anchorages to be installed as unit of Work of other sections.

2. Where installed products are indicated to comply with certain design loadings, include structural computations, material properties, and other information needed for structural analysis which has been prepared by, or under the supervision of, a qualified professional engineer.

3. Submit reproducible and six (6) prints of fabrication and installation of Stainless Steel Pylon.

4. Architectural drawings and calculations are provided for the footings / anchorage supporting the signpost and general resistance to code required loadings only. Provide complete design calculations and drawings for the signpost fabrication, including welds and mechanical fasteners as appear on the drawings, prepared by a professional engineer registered in the State of California, as may be required by any governing agency.

C. Include installation procedure for pylon, sequence of installation, and installation tolerances.

D. Show layout, dimensions, and identification of each pylon type corresponding to sequence and procedure of installation.

E. Indicate welded connections by AWS standard symbols. Detail inserts, connections, and joints.

F. Show location and details of anchorage devices to be embedded in other construction.

G. Samples for Finish and Color Approval: Submit samples of each type of metal and finish required. Prepare samples on metal of same alloy and thickness to be used for the work. Where normal color and texture variations are to be expected, include 2 or more units in each set of samples showing the limits of such variations. Include 24" long samples of stainless steel finish for each type to illustrate quality and texture of surface finish. Surface Texture Sample shall be as listed in 2.10, D, modified by glass bead blast to even, ungrained matte surface finish, shall be consistent over welds.

H. Installer certificates signed by Contractor certifying that welders comply with requirements specified under "Quality Assurance" article.

I. Provide certification for all work items of this section and other related sections. Where equipment, materials, or processes are specified to conform to industry and technical society publications of organizations such as American National Standards Institute (ANSI), American Society for Testing and Materials (ASTM), and Underwriters Laboratories Inc. (UL), submit proof of such compliance. The label of listing by the specified organization will be acceptable evidence of compliance. In lieu of the label or listing, submit a certificate from an approved independent testing organization, adequately equipped and competent to perform such services, stating that the item has been tested in accordance with the specified organization’s test methods and that the item conforms to the specified organization’s publication. In the case of processes where such certification is not readily available (processes such as welding), the contractor and subcontractors shall provide such assurances in writing as certification. Provide testing and a certificate from an approved independent testing organization at the direction of the Engineer.

J. Qualification data for firms and persons specified "Quality Assurance" article to demonstrate their capabilities and experience. Include list of completed projects with project name, addresses, names of Architects and Owners, plus other information specified.

1.04 QUALITY ASSURANCE

A. Fabricator Qualifications: Firm experienced in successfully producing stainless steel pylon similar to that indicated with sufficient production capacity to produce required units without causing delay in the Work, and with a minimum three years documented experience.

B. Installer Qualifications: Arrange for installation of pylons specified in this section by same firm which fabricated them or a firm experienced in successfully installing signpost similar to that indicated, with a minimum three years documented experience, and approved by manufacturer / fabricator.

C. Manufacturer Qualifications: Company specializing in manufacturing the products specified in this section with minimum three years documented experience.

D. Design Modifications: When materials, construction, or fabrication methods proposed differ from the design indicated on the Contract Documents, it shall be considered a Modification. Modifications to the design presented in the Contract Documents may be made only when such modifications in material, fabrication technique, or method of construction are proposed as part of the Shop Drawing submittal. Modifications are subject to approval by the Engineer. If such modifications are proposed, the following shall be designed under a California licensed professional civil or structural engineer's seal.

1. Design stainless steel pylon to withstand dead load, seismic loads and sway displacement, and design in accordance with the BART STANDARDS.

2. Design units to accommodate construction tolerances and deflection of structural members within the clearances indicated.

3. Design component connections to accommodate structure movement and thermal movement.

4. Provide adjustment to accommodate misalignment of structure without unit distortion or damage.

5. Provide calculations for loadings and stresses.

E. Qualify welding processes and welding operators in accordance with the following:

1. AWS D1.1 "Structural Welding Code - Steel."

2. AWS D1.2 "Structural Welding Code - Aluminum."

3. Certify that each welder employed in unit of Work of this section has satisfactorily passed AWS qualification tests for welding processes involved and, if pertinent, has undergone recertification.
4. Testing for recertification is Contractor's responsibility.

F. Engineer Qualifications: California licensed professional civil or structural engineer experienced in providing engineering services of the kind indicated which has resulted in the successful installation of assemblies similar in material, design, and extent to that indicated.

G. Pre-Installation Conference: Conduct conference at the site to comply with requirements of Division 1 Section "Project Meetings."

H. Regulatory Requirements: Comply with BART STANDARDS, building codes, approved shop drawings, erection drawings, modifications to design, and calculations, if any; and, regulatory requirements listed in other related sections.

I. Environmental Requirements: General: Do not apply materials when surface and ambient temperatures are outside the temperature ranges recommended by product manufacturer.

1.05 PROJECT CONDITIONS

A. Field Measurements: Do not delay job progress; allow for adjustments and fitting where taking of field measurements before fabrication might delay Work.

B. Coordination – General

1. Coordinate the specific requirements for all work items of this section with other related sections.

2. Site conditions shall be verified.

1.06 DELIVERY, STORAGE, AND HANDLING

A. Store stainless steel components and materials in clean, dry location, away from uncured concrete and masonry. Cover with waterproof paper, tarpaulin or polyethylene sheeting in a manner that permits air circulation within covering.

B. Handle Stainless Steel Pylon on site to a minimum; exercise care to avoid damaging metal finishes.

PART 2 – PRODUCTS

2.01 METALS

A. General: Provide stainless steel pylon composed of the forms and types which comply with requirements of referenced standards and which are free from surface blemishes where exposed to view in the finished unit. Exposed-toview surfaces exhibiting pitting, seam marks, roller marks, "oil canning," stains, discolorations or other imperfections on finished units are not acceptable.

B. Materials:

1. Stainless Steel Pylon: Provide materials which have been selected for their surface flatness, smoothness and freedom from surface blemishes where exposed to view in the finished unit. Exposed-to-view surfaces which exhibit pitting, seam marks, roller marks, “oilcanning” stains, discoloration or other imperfections on finished units will not be acceptable.

2. Formed Stainless Steel Pylon Components: All stainless steel Pylon members shall be fabricated from stainless steel as noted and shown on the drawings. Install as shown on the drawings.

3. Fabricated Post Anchors: Post anchors shall be fabricated from stainless steel and installed as noted and shown on the drawings.

4. Finishes: All stainless steel Pylon surfaces shall be as per Section 2.10.

C. Stainless Steel: Provide austenitic stainless steel in form indicated complying with the following requirements:

1. Tubing: ASTM A 554, Grades MT 301, MT 302, or MT 304, as standard with manufacturer.

2. Pipe: ASTM A 312, Grade TP 304.

3. Plate: ASTM A 167, Type 301, 302, or 304.

4. Bar Stock: ASTM A 276.

5. Castings: ASTM A 743, Grade CF 8 or CF 20.

2.02 MISCELLANEOUS MATERIALS

A. The Drawings and Specifications establish the design intent, geometry of scale, product dimensions, materials, minimum material thickness, concealment of fastenings, tolerances in fabrication and installation, and standard of quality. Recognizing that variations in construction technique predicated on machinery,

experience, and shop practices, are available to create the final finished fabrications; it is the intention of these Documents to rely on the fabricator to finalize methods utilized to achieve the design goals.

B. Fasteners: Of same basic stainless steel alloy as fastened metal, unless otherwise indicated. Do not use metals which are corrosive or otherwise incompatible with metals joined.

1. Provide concealed fasteners for interconnection of signpost components and for their attachment to other work, except where otherwise indicated.

2. Provide concealed fasteners for interconnection of signpost components and for their attachment to other work except where exposed fasteners are unavoidable or are the standard fastening method.

3. Provide Stainless security screws for exposed fasteners, unless otherwise indicated.

C. Welding Electrodes and Filler Metal: Type and alloy of filler metal and electrodes as recommended by producer of metal to be welded, complying with applicable AWS specifications, and as required for color match, strength and compatibility in the fabricated items.

D. Anchors and Inserts: Provide stainless steel anchors of type and size required for type of loading and installation condition shown, as recommended by manufacturer, unless otherwise indicated. Use toothed steel or expansion bolt devices for drilled-in-place anchors.

2.03 FABRICATION, GENERAL

A. The Contract Documents do not always establish the method, type or size of welds nor frequency of mechanical fastenings. This allows shop practice latitude for the fabricator. Provide complete design calculations and drawings for the signpost fabrications and attachments to the footings, prepared by a professional engineer registered in the State of California, as may be required by any governing agency. The Architectural drawings and calculations are provided for the footings for vertical loads and the basic code specified lateral loads only. The fabricator shall finalize the detailed fabrication of all welded and mechanical connections for the signpost. Permit thermal movement of components without buckling or undue stress on fasteners, or other detrimental effects. Fabricate components free of distortion or defects detrimental to appearance or performance, efficiency, maintenance, or safety of any individual elements.

B. Form stainless steel signpost to required shapes and sizes, with true curves, lines and angles. Provide components in sizes and profiles indicated, but not less than required to comply with requirements indicated for structural performance.

C. Allow for thermal movement resulting from the following maximum change (range) in ambient temperature, in the design, fabrication, and installation of

installed metal assemblies to prevent buckling, opening up of joints and overstressing of welds and fasteners. Base design calculations on actual surface temperatures of metals due to both solar heat gain and night time sky heat loss.

1. Temperature Change (Range): 100 deg F, (55.5 deg C) or as recommended by fabricator and approved by the Engineer.

D. Comply with AWS for recommended practices in shop welding. Provide welds behind finished surfaces without distortion or discoloration of exposed side. Clean exposed welded joints of all welding flux, and dress on all exposed and contact surfaces.

2.04 FABRICATION OF SIGNPOSTS

A. Fabricate stainless steel Pylon from HSS Steel, sizes and thickness as detailed and noted on the drawings. Shop fabricate and finish to the greatest extent possible.

B. Non-welded Connections: Fabricate stainless steel Pylon for interconnection of members by means of concealed mechanical fasteners and fittings where shown. Fabricate members and fittings to produce flush, smooth, rigid, hairline joints.

C. Welded Connections: Fabricate stainless steel Pylon for interconnections of members by welding where shown. Use welding method which is appropriate for stainless steel and finish indicated and develops strength required to comply with structural performance criteria. Finish exposed welds and surfaces smooth, flush, and blended to match adjoining surfaces.

2.05 STAINLESS STEEL FINISHES

A. Finish designations prefixed by AISI conform with the system established by the American Iron and Steel Institute for designating finishes for stainless steel sheet.

B. Bright, Cold-Rolled Unpolished Finish: AISI No. 2B finish.

C. Bright, Directional Polish: AISI No. 4 finish.

D. Satin, Directional Polish: AISI No. 6 finish.

E. Satin, Reflective, Directional Polish: AISI No. 7 finish.

F. Mirror-Like Reflective, Non-Directional Polish: AISI No. 8 finish.

PART 3 – EXECUTION

3.01 PREPARATION

A. The Contractor is responsible for all necessary field measurements at the

project site, the accurate fitting of all work, and proper accommodation of other trades. Before starting the work, compare, check, and cross check the structural drawings and all other drawings; report any discrepancies immediately for verification and adjustment. The Contractor is responsible for coordination necessary to install items per the manufacturer/fabricator's recommendations and details on the drawings.

B. Coordinate and furnish anchorages and setting drawings, diagrams, templates, instructions and directions for installation of items having integral anchors which are to be embedded in concrete or other adjoining construction. Coordinate delivery of such items to the project site. All workmanship shall be in accordance with best practice, accurately measured and laid out, carefully and precisely executed. Employ temporary bracing wherever necessary to sustain all loads imposed on the structure, including the use and operation as long as required for safety.

3.02 INSTALLATION, GENERAL

A. Provide anchorage devices and fasteners where shown or as necessary for securing stainless steel items to in-place construction; including, threaded fasteners for concrete inserts, anchor bolts, and other connectors as required.

B. Perform cutting, drilling and fitting required for installation of steel railings. Set products accurately in location, alignment and elevation, plumb, level and true, measured from established lines and levels. Provide temporary bracing or anchors in formwork for items which are to be built into concrete or similar construction.

C. Fit exposed connections accurately together to form tight, hairline joints or, where indicated, with uniform reveals and spaces as shown. Where cutting, welding and grinding are required for proper shop fitting and jointing of stainless steel rail items, restore finishes to eliminate any evidence of such corrective work.

D. Do not cut or abrade finishes which cannot be completely restored in the field. Return items with such finishes to the shop for required alterations, followed by complete refinishing or provide new units as required.

E. Restore protective coverings which have been damaged during shipment or installation of the work. Remove protective coverings only when there is no possibility of damage from other work yet to be performed at the same location.

   1. Retain protective coverings intact and remove simultaneously from similarly finished items to preclude non-uniform weathering and discoloration.

F. Field Welding: Comply with applicable AWS specification for procedures of manual shielded metal-arc welding, for appearance and quality of welds made, and for methods used in correcting welding work. Grind exposed welded joints smooth and restore finish to match finish of adjacent rail surfaces.

3.03 INSTALLATION OF STAINLESS STEEL PYLONS

A. Adjust stainless steel pylon prior to anchoring to ensure matching alignment at abutting joints. Space posts at interval indicated but not less than that required by design loadings.

B. Anchor stainless steel signposts to fittings as detailed.

C. Expansion Joints: Provide expansion joints at locations indicated on approved shop drawings.

D. Contractor shall employ a utility locator to indentify the presence of buried utilities prior the excavating for foundations.

3.04 PROTECTION

A. From the commencement until the completion and final acceptance of the work, the care and protection of all permanent work and all temporary work as may be required remains with the contractor. Provide, install, and maintain covering, enclosures, and shelters necessary and/or temporary protective coverings approved by fabricator to protect the permanent work from damage. Remove protective covering at time of Substantial Completion.

B. Any portion of the work damaged and/or disfigured by accident or other cause during the time between the finishing of the portion and the completion of the whole work shall be promptly, neatly, and satisfactorily repaired or reconstructed and the work as a whole left without blemish at final completion, at the Contractor's expense. Return items which cannot be refinished in the field to the shop; make required alterations and refinish entire unit, or provide new units as required.

3.05 WARRANTY

A. The manufacturer shall provide a written product warranty to BART, indicating that the product has been tested and has been in use for a sufficient period of time to assure its safety and durability.

3.06 MAINTENANCE

A. The manufacturer / fabricator shall provide a written description of recommended routine maintenance procedures and a written description of replacement parts, showing all components of the equipment installed.

END OF SECTION 05 80 00

SECTION 07 60 00

FLASHING AND SHEET METAL

The provisions of BART Standard Specifications Section 07 60 00 Flashing and Sheet Metal shall apply to the Work.

END OF SECTION 07 60 00

SECTION 07 90 00

JOINT PROTECTION

The provisions of BART Standard Specifications Section 07 90 00 Joint Protection shall apply to the Work.

END OF SECTION 07 90 00

SECTION 07 95 00

EXPANSION CONTROL

The provisions of BART Standard Specifications Section 07 95 00 Expansion Control shall apply to the Work.

END OF SECTION 07 95 00

SECTION 08 11 00

METAL DOORS AND FRAMES

The provisions of BART Standard Specifications Section 08 11 00 Metal Doors and Frames shall apply to the Work as modified herein.

END OF SECTION 08 11 00

SECTION 08 71 00

DOOR HARDWARE

The provisions of BART Standard Specifications Section 08 71 00 Door Hardware shall apply to the Work modified herein.

END OF SECTION 08 71 00

SECTION 09 91 00

PAINTING

The provisions of BART Standard Specifications Section 09 91 00 Painting shall apply to the Work as modified herein.

PART 2 - PRODUCTS

2.02 Paint Materials

A. Type and Manufacturer

14. Floor Enamel
    a. Provide exterior grade 100% acrylic latex paint for ceiling. Green Seal Certified to be low VOC, not to exceed 100 g/L.
    b. Color:
        1. ‘MacArthur Station’ wall text: Pantone Process Blue C, semi-gloss
        2. ‘MacArthur Station’ Wall background: Pantone white, semi-gloss
        3. Reflective ceiling: white, semi-gloss

END OF SECTION 09 91 00

SECTION 09 96 33

GRAFFITI-RESISTANT COATINGS

The provisions of BART Standard Specifications Section 09 96 33 Graffiti-Resistant Coatings shall apply to the Work.

END OF SECTION 09 96 33

SECTION 10 40 00

SAFETY SPECIALTIES

The provisions of BART Standard Specifications Section 10 40 00 Safety Specialties shall apply to the Work.

END OF SECTION 10 40 00

SECTION 12 94 00

SITE FURNISHINGS

PART 1 - GENERAL

1.01 WORK INCLUDED

A. Furnish and install all site furnishings and complete with all related appurtenances and incidentals as required.

1.02 RELATED SECTIONS

A. Section 05 70 00: Decorative Metal

B. Section 32 16 21: Concrete Curbs, Gutters and Walks

1.03 QUALITY ASSURANCE

A. Materials and method of construction to comply with the following standards:

1. American Institute of Steel Construction (AISC)
2. American Iron and Steel Institute (AISI)
3. American National Standards Institute (ANSI)
4. American Society of Testing and Materials (ASTM)
5. American Welding Society (AWS)
6. American Disabilities Association 1990 (ADA)
7. California Accessibility Reference Manual, Title 24
8. Federal Hazardous Substances Act
9. California Code of Regulations, Title 22. Social Security, Division 4. Environmental Health, Chapter 22 Safety Regulations for Playgrounds.
10. US Consumer Product Safety Commission (CPSC) Publication No. 325 Handbook for Public Playground Safety
11. Standard Consumer Safety Performance Specification for Playground equipment for Public Use (ASTM F1487)
12. Americans with Disabilities Act (ADA) Accessibility Guidelines for Buildings and Facilities, 2011.

1.04 SUBMITTALS

A. Submit in accordance with Section 01 33 00.

B. Submit bus shelter catalog cut sheets for standard manufactured items indicating color, size, finish, material and method of attachment.

C. Submit Shop Drawing for the complete custom assembly of metal bench. Shop drawing to include color, finish, material, size, number of all components and method of attachment.

1.05 COORDINATION

A. Coordinate the work of all trades, including plumbers, electrical, etc., such that there is ample time to install related work, sleeves and conduit, prior to installation of furnishings.

1.06 PRODUCT HANDLING

A. Ship and store materials in such a way as to prevent damage due to stains, discoloration, scratches, dirt or any other causes. Store unassembled components indoors in a clean and dry location. Store and handle materials in such a way as to prevent abrasion or other damage.

1.07 FABRICATION & WORKMANSHIP

A. Fabricate all site furnishings and play equipment in the shop. Fabricate as completely as possible to keep field assembly to a minimum.

B. Provide all miscellaneous metal items and adhesives required for completion of the work, even though not specifically shown or identified.

C. Provide Owner with tools to loosen and tighten all vandal proof connectors.

D. Provide Owner with touch up paint for all site furnishings; one container for each color installed.

E. Conceal all connections where possible; otherwise use vandal-proof connectors.

F. Workmanship and finish to be in accordance with good practice and the construction documents. Finish work to be firm, in true alignment, and properly squared, with smooth clean uniform appearance, without waves, distortions, holes, cracks, stains or discolorations. Joinings to be close-fitting. Finish work to have no exposed unsightly anchors or fastenings and present no hazardous, unfinished or unsafe protrusions, offsets, burrs, raw edges, or sharp corners. All work to have provisions for expansion and contraction or shrinkage as necessary to prevent cracks, buckling and warping.

G. Warranty all equipment and workmanship to remain free of defects due to faulty

materials or workmanship for a period of 24 months after the date of completion and Final Acceptance.

1.09 DEFINITIONS

A. The “Owner’s Representative” is the person, appointed by the Owner, to represent their interests. The Owner’s Representative will be on site frequently and regularly during construction. Where needed, the Owner’s Representative will identify the need for field visits by the landscape architect or other consultants.

PART 2 - PRODUCTS

2.01 GENERAL

A. Miscellaneous Metals

1. Bolts, nuts, fasteners and anchors: Stainless steel, type 304. ASTM A 276, A 193 and A 194.

B. Provide all miscellaneous metal items required for completion of the Contract, even though not specifically shown or identified.

C. Installation to be made with vandal-proof connectors where possible.

2.02 SITE FURNISHINGS

A. Bench:

Type I

1. Bench seat: Forms+Surfaces Tangent Rail with back, post leg. Model SRTAN-3BA, stainless steel seat pans ‘Fade”. Available through Forms+Surfaces, www.forms-surfaces.com, 800 451 0410, local rep: Michael Risso M 925 890 4623, or equal
2. Mounting: Attach bench seat to the bench tubing footing per detail drawing, see section 05 70 00 Decorative Metal for bench tubing information.
3. Provide latex rubber gasket for any interfaces of different metals on the bench assembly to prevent galvanic corrosion.

Type II

1. Bench seat: Forms+Surfaces Tangent Rail with back, post leg. Model SRTAN-3BA, stainless steel seat pans ‘Fade”. Available through Forms+Surfaces, www.forms-surfaces.com, 800 451 0410, local rep: Michael Risso M 925 890 4623, or equal.

B. Bike rack:

1. Double deck floor mount bike rack: “Dero Decker” single sided bicycle racks manufactured by DERO BIKE RACK CO. (504 Malcolm Avenue SE, Suite 100, Minneapolis, MN 55414, 1-888-337-6729, Website: www.dero.com), or equal.

2. Double sided floor mount bike rack: “Ultra Space Saver Double Sided” bicycle racks manufactured by DERO BIKE RACK CO. (504 Malcolm Avenue SE, Suite 100, Minneapolis, MN 55414, 1-888-337-6729, Website: www.dero.com), or equal.

3. Single sided floor mount bike rack: “Ultra Space Saver Single Sided” bicycle racks manufactured by DERO BIKE RACK CO. (504 Malcolm Avenue SE, Suite 100, Minneapolis, MN 55414, 1-888-337-6729, Website: www.dero.com), or equal.

4. Single sided wall mount bike rack: “Ultra Space Saver Wall Mount” bicycle racks manufactured by DERO BIKE RACK CO. (504 Malcolm Avenue SE, Suite 100, Minneapolis, MN 55414, 1-888-337-6729, Website: www.dero.com), or equal.

5. Hot-dipped galvanized finish.

6. Provide shop drawing for each individual bike rack installation detail. Installation to be based on manufacturer’s recommendation.

7. Provide setback from each individual bike rack per manufacturer’s recommendation.

E. Trash Receptacle:

1. Plastic trash container: “FG 263200” 32 Gal Brute round container, color gray. Manufactured by Rubbermaid Commercial Products (800-347-9800), or equal.

2. Trash Receptacles: Urban Renaissance Receptacle, Model #SLURB-36SS, 36 gallon, side opening with integrated recycle bin, scape screen grillwork, color: powdercoat Aluminum Texture. Available through Forms + Surfaces: Michael Risso, t. 800.451.0410, m. 925.890.4623, or equal.

PART 3 - EXECUTION

3.01 INSPECTION

A. Prior to commencement of work described in this section, carefully inspect installed

work, and verify all such work is correct and complete. Immediately notify the Owner's Representative of any discrepancy before proceeding with work.

3.02 INSTALLATION

A. Install all furnishings in accordance with manufacturer's recommendations.

B. Furnish all anchors, bolts, and appurtenances required for complete installation to ensure proper fit and accurate placements.

C. Place all furnishings in the proper location, plumb, level, square, in true alignment and firmly anchored.

D. Install furnishings in concrete footings, per the manufacturer's recommendation or as shown on detail drawing

E. Benches: Install bench seats level at +/- 16" above finish pavement grade.

3.03 ADJUSTING

A. Check all bolts, nuts and other connections for proper fit and tightness.

B. Check components for proper alignment, fit and tolerances.

C. Check all finishes for damage. Replace damaged components.

3.04 CLEANING

A. At the end of each working day, remove all empty containers from the site, and remove all debris from walks and paving. Sweep all walks and paving clean.

B. Final Clean-up: In addition to the daily clean-up, haul from the site and legally dispose of all waste materials.

C. Immediately prior to acceptance, clean all exposed surfaces of soil and discoloration. Follow recommendations of component manufacturer for cleaning methods and materials.

3.05 PROTECTION

A. Protect all furnishings from damage by subsequent work. Replace damaged furnishings at no additional cost to Owner.

END OF SECTION 12 94 00

7. Provide setback from each individual bike rack per manufacturer's recommendation.

E. Trash Receptacle:

~~Custom~~

1. Plastic trash container: "FG 263200" 32 Gal Brute round container, color gray. Manufactured by Rubbermaid Commercial Products (800-347-9800).
2. For remaining metal trash receptacle components, see section 05 70 00 Decorative Metal.

~~Deduct Alternate 6~~ ?

1. ~~Trash~~ Receptacles: Urban Renaissance Receptacle, Model #SLURB-36SS, 36 gallon, side opening with integrated recycle bin, scape screen grillwork, color: powdercoat Aluminum Texture. Available through Forms + Surfaces: Michael Risso, t. 800.451.0410, m. 925.890.4623.

PART 3 - EXECUTION

3.01 INSPECTION

A. Prior to commencement of work described in this section, carefully inspect installed work, and verify all such work is correct and complete. Immediately notify the Owner's Representative of any discrepancy before proceeding with work.

3.02 INSTALLATION

A. Install all furnishings in accordance with manufacturer's recommendations.

B. Furnish all anchors, bolts, and appurtenances required for complete installation to ensure proper fit and accurate placements.

C. Place all furnishings in the proper location, plumb, level, square, in true alignment and firmly anchored.

D. Install furnishings in concrete footings, per the manufacturer's recommendation or as shown on detail drawing

E. Benches: Install bench seats level at +/- 16" above finish pavement grade.

3.03 ADJUSTING

A. Check all bolts, nuts and other connections for proper fit and tightness.

B. Check components for proper alignment, fit and tolerances.

C. Check all finishes for damage. Replace damaged components.

3.04 CLEANING

A. At the end of each working day, remove all empty containers from the site, and remove all debris from walks and paving. Sweep all walks and paving clean.

B. Final Clean-up: In addition to the daily clean-up, haul from the site and legally dispose of all waste materials.

C. Immediately prior to acceptance, clean all exposed surfaces of soil and discoloration. Follow recommendations of component manufacturer for cleaning methods and materials.

3.05 PROTECTION

A. Protect all furnishings from damage by subsequent work. Replace damaged furnishings at no additional cost to Owner.

END OF SECTION 12 94 00

SECTION 20 10 13

COMMON MATERIALS AND METHODS FOR FACILITY SERVICES-FIRE SUPPRESSION, PLUMBING AND HVAC

The provisions of BART Standard Specifications Section 20 10 13 Common Materials and Methods for Facility Services-Fire Suppression, Plumbing and HVAC shall apply to the Work.

END OF SECTION 20 10 13

SECTION 20 20 13

PIPE SLEEVES, SUPPORTS AND ANCHORS FOR FACILITY SERVICES

The provisions of BART Standard Specifications Section 20 20 13 Pipe Sleeves, Supports and Anchors for Facility Services shall apply to the Work.

END OF SECTION 20 20 13

SECTION 20 40 13

IDENTIFICATION FOR FACILITY SERVICES

The provisions of BART Standard Specifications Section 20 40 13 Identification for Facility Services shall apply to the Work.

END OF SECTION 20 40 13

SECTION 20 50 13

RACEWAYS FOR FACILITY SERVICES

The provisions of BART Standard Specifications Section 20 50 13 Raceways for Facility Services shall apply to the Work.

END OF SECTION 20 50 13

SECTION 20 50 16

UNDERGROUND DUCTWORK AND STRUCTURES FOR FACILITY SERVICES

The provisions of BART Standard Specifications Section 20 50 16 Underground Ductwork and Structures for Facility Services shall apply to the Work.

END OF SECTION 20 50 16

SECTION 20 70 13

COMMON MATERIALS AND METHODS FOR ELECTRONIC SERVICES

The provisions of BART Standard Specifications Section 20 70 13 Common Materials and Methods for Electronic Services shall apply to the Work.

END OF SECTION 20 70 13

SECTION 20 70 26

COMMON MATERIALS AND METHODS FOR ELECTRICAL SYSTEMS

The provisions of BART Standard Specifications Section 20 70 26 Common Materials and Methods for Electrical Systems shall apply to the Work.

END OF SECTION 20 70 26

SECTION 22 13 01

SANITARY SEWAGE

The provisions of BART Standard Specifications Section 22 13 01 Sanitary Sewage shall apply to the Work.

END OF SECTION 22 13 01

SECTION 22 14 01

STORM DRAINAGE

The provisions of BART Standard Specifications Section 22 14 01 Storm Drainage shall apply to the Work.

END OF SECTION 22 14 01

SECTION 26 05 26

GROUNDING AND BONDING FOR ELECTRICAL SYSTEMS

The provisions of BART Standard Specifications Section 06 05 26 Grounding and Bonding for Electrical Systems shall apply to the Work.

END OF SECTION 26 05 26

SECTION 26 24 24

CIRCUIT BREAKERS AND PANELBOARDS

The provisions of BART Standard Specifications Section 26 24 24 Circuit Breakers and Panelboards shall apply to the Work.

END OF SECTION 26 24 24

SECTION 26 50 00

LIGHTING

The provisions of BART Standard Specifications Section 26 50 00 Lighting to apply to the Work as modified herein.

PART 2 - PRODUCTS

2.02 LAMPS

D. Light Poles Heads

1. Model “Sloop Head-ASFL-1650-L-115LED-55-PAM”, pole mount head, by Pace Illumination (800-441-1771); www.paceillumination.com. Available through local rep David Miguelucci, 16500 Inc. (510-645-2573), or equal.

2. Model “BEACON LIGHTING LED VIPER” –80NB-235-T4-5K-WB: Available through local rep David Miguelucci, 16500 Inc. (510-645-2573), or equal.

3. Model “Omero LED” - MR1-LED-1-63B530_40K-SR5: Avalable through local rep David Miguelucci, 16500 Inc. (510-645-2573), or equal.

END OF SECTION 26 50 00

SECTION 28 10 01

ACCESS CONTROL SYSTEM

The provisions of BART Standard Specifications Section 28 10 01 Access Control System shall apply to the Work as modified herein.

PART 2 - PRODUCTS

2.03

A. Bike Parking Access System: "BikeLink Group Parking Facility Access System" by eLock Technologies (800 Heinz Ave, Suite 111, Berkeley, CA 94710; 510-549-2853)

END OF SECTION 28 10 01

SECTION 28 41 29

CLOSED CIRCUIT TELEVISION SYSTEM

The provisions of BART Standard Specifications Section 28 41 29 Closed Circuit television System shall apply to the Work as modified herein.

END OF SECTION 28 41 29

SECTION 31 00 00

EARTHWORK

The provisions of BART Standard Specifications Section 31 00 00 Earthwork shall apply to the Work.

END OF SECTION 31 00 00

SECTION 31 11 00

CLEARING AND GRUBBING

The provisions of BART Standard Specifications Section 31 11 00 Clearing and Grubbing shall apply to the Work.

END OF SECTION 31 11 00

SECTION 31 50 00

EXCAVATION SUPPORT AND PROTECTION

The provisions of BART Standard Specifications Section 31 50 00 Excavation Support and Protection shall apply to the Work.

END OF SECTION 31 50 00

SECTION 32 11 17

AGGREGATE SUBBASE COURSES

The provisions of BART Standard Specifications Section 32 11 17 Aggregate Subbase Courses shall apply to the Work.

END OF SECTION 32 11 17

SECTION 32 13 13

AGGREATE BASE COURSE

The provisions of BART Standard Specifications Section 32 13 13 Concrete Paving shall apply to the Work.

END OF SECTION 32 13 13

SECTION 32 13 13

CONCRETE PAVING

The provisions of BART Standard Specifications Section 32 13 13 Concrete Paving shall apply to the Work.

END OF SECTION 32 13 13

SECTION 32 16 21

CONCRETE CURBS, GUTTERS AND WALKS

The provisions of BART Standard Specifications Section 32 16 21 Concrete Curbs, Gutters and Walks to apply to the Work as modified herein.

PART 2 - PRODUCTS

2. 02

K. Tactile Guide Tile: “Detectable Directional Surface Tile”, 12” x 12” square X ¼” thick. Color “FDX3008” (Dark Gray – 70% darker than surrounding pavement color per ADA codes). Manufacture by Armor-Tile Transit Systems (100-300 Williamsville, NY 14221; 800-682-2525; www.armortiletransit.com).

L. Tactile Warning Tile: “Surface Applied Tactile Warning Tile”, 12” x 12” square X ¼” thick, color yellow as manufacture by Armor-Tile Transit Systems (800-682-2525).

M Integral colored concrete additive: Concrete Color Type 2- lampblack in dry form is to be mixed in accordance with the requirements of ASTM “Standard Specifications for Lampblack,” Designation D 209, in the proportion of 20lbs per cubic yard of concrete.

N. Sealer: “Colorcure Concrete Sealer” for integral colored concrete paving as manufactured by LM Scofield Company (800-800-9900), or approved equivalent. Semi-gloss finish. Intent is to match existing top seeding as closely as possible.

END OF SECTION 32 16 21

SECTION 33 05 16

UTILITY STRUCTURES

The provisions of BART Standard Specifications Section 33 05 16 Utility Structures shall apply to the Work.

END OF SECTION 33 05 16

SECTION 33 05 25

SUPPORT AND PROTECTION OF UTILITIES

The provisions of BART Standard Specifications Section 33 05 25 Support and Protection of Utilities shall apply to the Work

END OF SECTION 33 05 25

SECTION 33 05 28

TRENCHING AND BACKFILLING FOR UTILITIES

The provisions of BART Standard Specifications Section 33 05 28 Trenching and Backfilling for Utilities shall apply to the Work.

END OF SECTION 33 05 28

SECTION 33 40 00

STORM DRAINAGE UTILITIES

The provisions of BART Standard Specifications Section 33 40 00 Storm Drainage Utilities shall apply to the Work.

END OF SECTION 33 40 00

ATTACHMENT 1.

MacARTHUR BART STATION - PLAZA REDESIGN
CONTRACT NO. _____

BID SCHEDULE

ITEM	SPEC SEC	DESCRIPTION	UNIT	EST QTY	UNIT PRICE	ITEM TOTAL
1	01 20 00	Allowance for Differing Site Conditions	ALLOW	1	XXX	$0.00
2	01 57 00	Traffic Maintenance and Control	LS	1	XXX	$0.00
3	01 71 13	Moblization	LS	1	XXX	$0.00
4	02 41 00	Demolition	LS	1	XXX	$0.00
5	03 20 00	Cast-In-Place Concerte	CY	XXX	XXX	$0.00
6	05 12 00	Structural Steel Framing	TON	XXX	XXX	$0.00
7	05 50 00	Metal Fabrications	LS	1	XXX	$0.00
8	05 70 00	Decorative Metal	LS	1	XXX	$0.00
9	07 60 00	Flashing and Sheet Metal	LS	1	XXX	$0.00
10	07 95 00	Expansion Control	LS	1	XXX	$0.00
11	08 11 00	Metal Doors and Frames	LS	1	XXX	$0.00
12	08 71 00	Door Hardware	LS	1	XXX	$0.00
13	09 91 00	Painting	LS	1	XXX	$0.00
14	09 96 33	Graffiti Resistant Coatings	LS	1	XXX	$0.00
15	10 40 00	Safety Specialties	LS	1	XXX	$0.00
16	12 94 00	Site Furnishings	LS	1	XXX	$0.00
17	28 41 29	Closed Cicuit Television System	LS	1	XXX	$0.00
17	31 00 00	Earthwork	LS	1	XXX	$0.00
18	31 11 00	Site Clearing and Grubbing	LS	1	XXX	$0.00
19	31 50 00	Excavation Support and Protection	LS	1	XXX	$0.00
20	32 11 17	Aggregate Subbase Courses	CY	XXX	XXX	$0.00
21	32 11 23	Aggregate Base Course	CY	XXX	XXX	$0.00
22	32 13 13	Concrete Paving	LS	1	XXX	$0.00
23	32 16 21	Concrete Curbs, Gutters and Walks	LS	1	XXX	$0.00
24	33 05 16	Utility Structures	LS	1	XXX	$0.00
25	33 05 25	Support and Protection of Utilities	LS	1	XXX	$0.00
26	33 40 00	Storm Drainage Utilities	LS	1	XXX	$0.00
27	Division 26	Electrical Work	LS	1	XXX	$0.00

TOTAL AMOUNT BID (ITEM NUMBERS 1 THROUGH 31 INCLUSIVE) $0.00

ATTACHMENT 2.

DIST.	STATE	FEDERAL PROJECT NO.	FISCAL YEAR	SHEET NO.	TOTAL SHEETS
7	CALIF.				

DIST.	COUNTY	ROUTE	POST MILE	SHEET	TOTAL SHEETS
4	Ala.	24		1A	

REVISIONS | DATE

SUMMARY OF EASEMENT PARCELS TO BART

COUNTY	PARCEL	EASEMENT TYPE	SHEET NO.
Ala	E-16	D	2
Ala	E-17	D	2
Ala	E-18	D	2 & 3
Ala	E-19	A and C	4 & 5
Ala	E-20	D	5 & 6
Ala	E-21	D	6
Ala	E-22	D	6 & 7
Ala	E-23	D	7
Ala	E-24	D	7 & 8
Ala	E-25	D	9 & 10
Ala	E-26	D	10 & 11
Ala	E-27	A and C	11
Ala	E-28	A and C	11 & 12
Ala	E-29	D	12 & 13
Ala	E-30	D	13 & 14

SUMMARY OF JOINT USE PARCELS TO BART

COUNTY	PARCEL	CLASS	SHEET NO.	
Ala	J-8	I	1	
Ala	J-9	III	1 & 2	
Ala	J-10	III	2	
Ala	J-11	III	2	
Ala	J-12	III	3 & 4	
Ala	J-13	II	5	
Ala	J-14	III	5	
Ala	J-15	II, III	5	
Ala	J-16	III	6	
Ala	J-17	III	6	
Ala	J-18	I	6 & 7	
Ala	J-19	III	7	
Ala	J-20	III	7	
Ala	J-21	III	8 & 9	
Ala	J-22	III	10	
Ala	J-23	III	11	
Ala	J-24	III, IV	11 & 12	
Ala	J-25	III	12	SUBSTATION AREA
Ala	J-26	III	12	" "
Ala	J-27	III	12	
Ala	J-28	III	13	
Ala	J-29	I	14	

EASEMENT PURPOSES

EASEMENT TYPE A: (Station Area)

FOR CONSTRUCTION, OPERATION (INCLUDING THE VENDING OF SUCH GOODS AND SERVICES), MAINTENANCE, REPLACEMENT, REPAIR, CHANGE, AND RECONSTRUCTION OF A PUBLICLY OWNED RAPID TRANSIT STATION AND ALL PURPOSES REASONABLY INCIDENTAL THERETO UPON, OVER, AND ACROSS SUBJECT PARCEL (EXCEPTING THEREFROM THE AREA OCCUPIED BY FREEWAY STRUCTURES AND FACILITIES):

EASEMENT TYPE B: (Station Area)

FOR CONSTRUCTION, OPERATION, MAINTENANCE, REPLACEMENT, REPAIR, CHANGE, AND RECONSTRUCTION OF A PUBLICLY OWNED PARKING LOT, INCLUDING ANY BUILDING OR MULTI-DECK FACILITY DEVOTED PRIMARILY TO PARKING AND ALL PURPOSES REASONABLY INCIDENTAL THERETO, UPON, OVER, AND ACROSS SUBJECT PARCEL (EXCEPTING THEREFROM THE AREA OCCUPIED BY FREEWAY STRUCTURES AND FACILITIES):

BART SHALL NOT UPON THIS SUBJECT PARCEL CONSTRUCT, INSTALL, OR OPERATE ANY GASOLINE SUPPLY STATION ON THE PREMISES, NOR SHALL BULK STORAGE OF GASOLINE OR PETROLEUM PRODUCTS, PARKING OF LOADED TRUCKS CONTAINING COMBUSTIBLE MATERIAL SUCH AS EXPLOSIVE PRODUCTS OR PETROLEUM PRODUCTS (OTHER THAN IN THE FUEL TANKS OF THE VEHICLES) BE PERMITTED.

EASEMENT TYPE C: (Station Area)

FOR CONSTRUCTION, OPERATION, MAINTENANCE, REPLACEMENT, REPAIR, CHANGE AND RECONSTRUCTION OF PUBLICLY OWNED RAPID TRANSIT TRACK LINES AND STRUCTURES AND FACILITIES REASONABLY INCIDENTAL THERETO, FOR THE OPERATION OF THE TRANSIT SYSTEM UPON, OVER, AND ACROSS SUBJECT PARCEL:

ACCESS TO SUBJECT PARCEL (INGRESS AND EGRESS) SHALL ONLY BE FROM ESTABLISHED DRIVEWAYS AND WALKWAYS ALONG PUBLIC STREETS AND BY WAY OF BART'S TUNNELS AND TRACKS.

EASEMENT TYPE D: (Corridor for BART's Trackage)

FOR CONSTRUCTION, OPERATION, MAINTENANCE, REPLACEMENT, REPAIR, CHANGE AND RECONSTRUCTION OF PUBLICLY OWNED RAPID TRANSIT TRACK LINES, AND STRUCTURES AND FACILITIES REASONABLY INCIDENTAL THERETO, FOR THE OPERATION OF THE TRANSIT SYSTEM BETWEEN STATION SITES AND BART ACCESS STRUCTURES UPON, OVER, AND ACROSS THE SUBJECT PARCEL (EXCEPTING THE AREA OCCUPIED BY FREEWAY STRUCTURES AND FACILITIES).

THERE IS NO RIGHT OF ACCESS (INGRESS AND EGRESS) TO OR FROM SUBJECT PARCEL FOR ANY PURPOSE WHATSOEVER EXCEPT WHERE MEANS OF INGRESS AND EGRESS ARE AVAILABLE FROM THE STATION SITES AND LOCAL STREET FACILITIES.

JOINT USE PURPOSES

CLASS I:

TO PROVIDE ACCESS BY USE OF A TUNNEL, AERIAL STRUCTURE, ETC. AS APPROPRIATE THROUGH (UNDER) STATE HIGHWAY RIGHT OF WAY BETWEEN BART'S EASEMENT AREA AND BART FACILITIES OUTSIDE OF STATE RIGHT OF WAY CROSSING. SAID (TUNNEL, AERIAL STRUCTURES, ETC.) SHALL BE FOR THE SOLE PURPOSE OF OPERATING BART TRAINS.

CLASS II:

TO PROVIDE PEDESTRIAN ACCESS BY USE OF A PEDESTRIAN FACILITY UNDER STATE HIGHWAY RIGHT OF WAY BETWEEN BART'S EASEMENT AREA AND TRANSIT FACILITIES OUTSIDE STATE HIGHWAY RIGHT OF WAY CROSSING. SAID FACILITY SHALL BE FOR THE SOLE PURPOSE OF PEDESTRIAN MOVEMENT FROM BART'S PARKING LOT TO BART'S STATION.

CLASS III:

TO PROVIDE AREAS OF JOINT USE FOR BARTD, STATE HIGHWAY, AND LOCAL STREET FACILITIES. SUCH FACILITIES SHALL BE PHYSICALLY SEPARATED FROM EACH OTHER BY TUNNELS, WALLS, AERIAL STRUCTURES, OR OTHER MEANS.

CLASS IV:

TO PROVIDE AREAS OF JOINT USE FOR CONSTRUCTION, OPERATION, MAINTENANCE, REPLACEMENT, REPAIR, CHANGE, AND RECONSTRUCTION OF A PUBLICLY OWNED PARKING LOT, INCLUDING ANY BUILDING OR MULTI-DECK FACILITY DEVOTED PRIMARILY TO PARKING AND ALL PURPOSES REASONABLY INCIDENTAL THERETO, UPON, OVER, AND ACROSS SUBJECT PARCEL (EXCEPTING THEREFROM THE AREA OCCUPIED BY FREEWAY STRUCTURES AND FACILITIES):

BART SHALL NOT UPON THIS SUBJECT PARCEL CONSTRUCT, INSTALL, OR OPERATE ANY GASOLINE SUPPLY STATION ON THE PREMISES, NOR SHALL BULK STORAGE OF GASOLINE OR PETROLEUM PRODUCTS, PARKING OF LOADED TRUCKS CONTAINING COMBUSTIBLE MATERIAL SUCH AS EXPLOSIVE PRODUCTS OR PETROLEUM PRODUCTS (OTHER THAN IN THE FUEL TANKS OF THE VEHICLES) BE PERMITTED.

Tom Kaf). RCE-8065
REGISTERED CIVIL ENGINEER NO.
7/6/87
DATE

FILED IN THE OFFICE OF THE RECORDER OF THE COUNTY OF ALAMEDA
DATE: 10-14-87
STATE HIGHWAY MAP BOOK
SERIAL NO. 87-280663 , PAGE

STATE OF CALIFORNIA BUSINESS AND TRANSPORTATION AGENCY DEPARTMENT OF TRANSPORTATION DISTRICT 4	PARCEL MAP JOINT USE & EASEMENT PARCELS TO BARTD
DR. BY [illegible] DATE 1-87	CO. Ala. RTE. 24 P.M.
CKD. BY 3 of 18	DR. NO. M-1263.1A
	PARCEL 48778

E.A. 352602
R/W P.E. P.C.H.

MAP REFERENCE: H.C. | APPRAISAL | RECORD | VOUCHER | MONUM. | OTHER

ATTACHMENT 3.

D.P.S. REG. No.	STATE	FEDERAL PROJECT NO.	FISCAL YEAR	SHEET NO.	TOTAL SHEETS
7	CALIF.				

DIST.	COUNTY	ROUTE	POST MILE	SHEET NO.	TOTAL SHEETS
4	Ala	24	2.2	5	

REVISIONS | DATE

COORDINATES, BEARINGS AND DISTANCES SHOWN ARE ON THE CALIFORNIA COORDINATE SYSTEM ZONE III, NAD 1927
DISTANCES SHOWN BY ▭
OBTAIN GROUND LEVEL DISTANCES

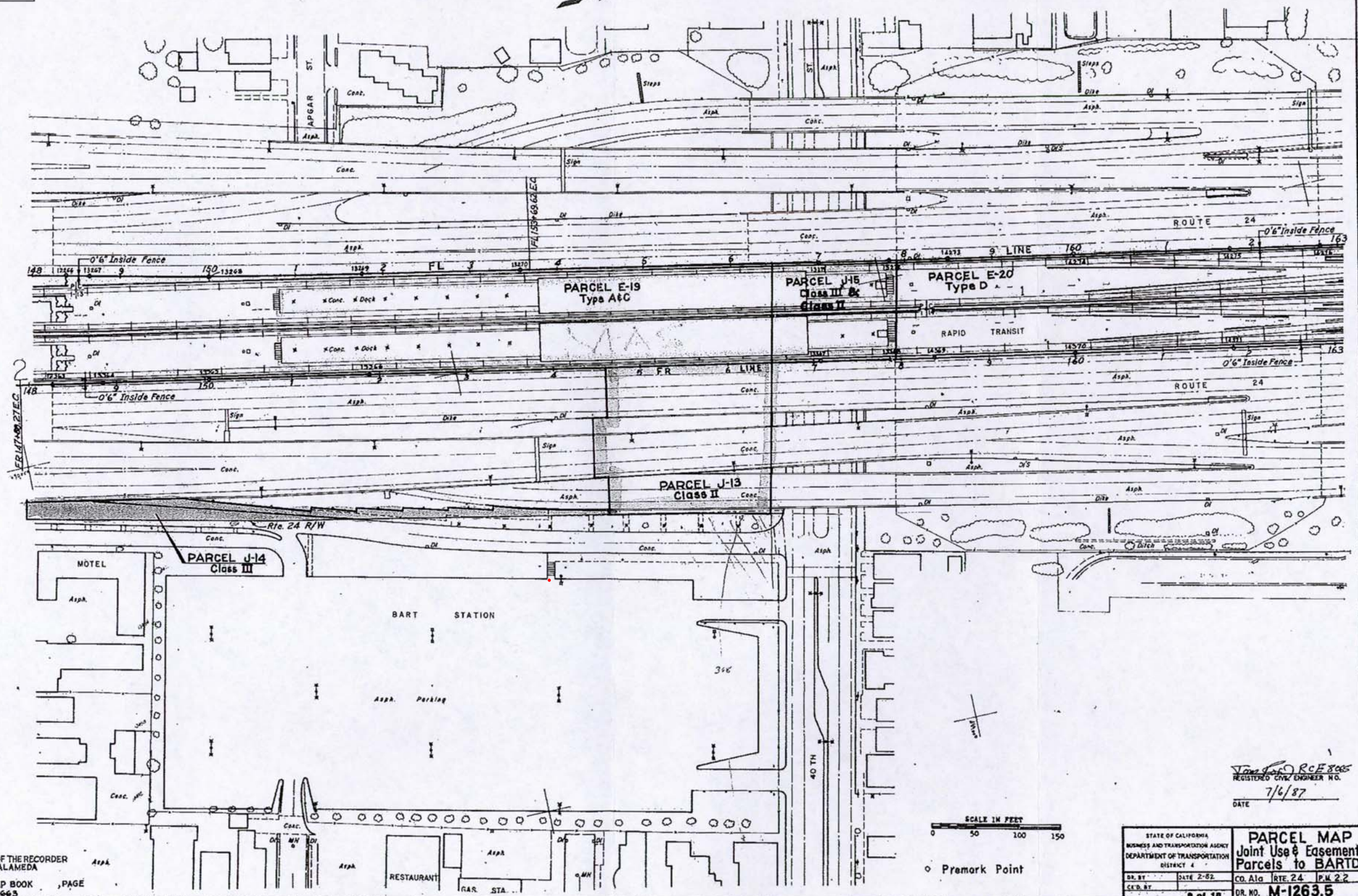

FILED IN THE OFFICE OF THE RECORDER OF THE COUNTY OF ALAMEDA
DATE: 10-14-87
STATE HIGHWAY MAP BOOK , PAGE
SERIAL NO. 87-280663

Tom Fox RCE 8065
REGISTERED CIVIL ENGINEER NO.
7/6/87
DATE

STATE OF CALIFORNIA
BUSINESS AND TRANSPORTATION AGENCY
DEPARTMENT OF TRANSPORTATION
DISTRICT 4

DR. BY | DATE 2-82
CE'D. BY
9 of 18

PARCEL MAP
Joint Use & Easement Parcels to BARTD

CO. Ala | RTE. 24 | P.M. 2.2
DR. NO. M-1263.5

PARCEL 48778

F.A. 332602
R/W RE. P.C.K.

MAP REFERENCE					
H.C.	APPRAISAL	RECORD	VOUCHER	MONUM.	OTHER
					M-12655

EXHIBIT T

Geotechnical Report and three letters from Geotechnical consultant dated May 22, 2012, January 22, 2013, and September 16, 2013.

ROCKRIDGE GEOTECHNICAL

Prepared for **MacArthur Transit Community Partners, LLC**

REVISED GEOTECHNICAL CONSULTATION
MACARTHUR TRANSIT VILLAGE INFRASTRUCTURE
MACARTHUR BART STATION
OAKLAND, CALIFORNIA

UNAUTHORIZED USE OR COPYING OF THIS DOCUMENT IS STRICTLY PROHIBITED BY ANYONE OTHER THAN THE CLIENT FOR THE SPECIFIC PROJECT

July 6, 2011
Project No. 11-317

4379 Piedmont Avenue
Oakland, CA 94611

510 420-5738 tel
510 652-3096 fax

ROCKRIDGE GEOTECHNICAL

July 6, 2011
Project No. 11-317

Mr. Art May
MacArthur Transit Community Partners, LLC
345 Spear Street, Suite 700
San Francisco, California 94105

Subject: Revised Geotechnical Consultation
Infrastructure Improvements
MacArthur Transit Village
Oakland, California

Dear Mr. May:

We are pleased to present the revised results of our geotechnical consultation for the proposed infrastructure improvements to be constructed as part of the MacArthur Transit Village (MTV) development in Oakland, California.

The project site is currently the MacArthur BART Station parking lot, which lies between Highway 24, 40th Street, Telegraph Avenue, and MacArthur Boulevard. The BART parking lot is a depressed area that lies about 3 to 13 feet below adjacent City streets and neighboring properties. The current MTV development plan divides the site into six parcels, designated Parcel A through E, and includes new internal streets that connect the parcels to 40th Street, MacArthur Boulevard, Telegraph Avenue, and the BART Plaza. The new streets will require fills of up to 11 feet thick to be placed above existing grades. The proposed infrastructure improvements will include new vehicular pavements, consisting of asphalt concrete (AC), Portland cement concrete (PCC), and permeable interlocking concrete pavers (ICP). New pedestrian areas will consist of concrete flatwork, permeable ICP, and non-permeable pavers. Landscaped zones and tree wells will also be constructed within the pedestrian areas adjacent to the new streets. The development will also include installation of underground utilities beneath the new streets.

Our scope of work consisted of reviewing existing subsurface data for the site, performing engineering analyses, and developing conclusions and recommendations regarding the geotechnical aspects of the proposed infrastructure improvements.

The primary geotechnical issues for the design of this project are: 1) the presence of highly expansive near-surface soil, 2) the potential for up to 2-1/2 inches of liquefaction-

4379 Piedmont Avenue
Oakland, CA 94611

510 420-5738 tel
510 652-3096 fax

induced ground surface settlement following a major earthquake, and 3) the presence of random weak, moderately compressible clay and silt layers beneath the site.

We conclude that from a geotechnical engineering standpoint, the proposed infrastructure improvements can be constructed as planned, provided the recommendations presented in this report are incorporated into the project plans and specifications and implemented during construction.

This report presents recommendations regarding grading, fill placement, pavement design and other geotechnical aspects of the project. The recommendations contained in this report are based on limited subsurface data. Consequently, variations between expected and actual soil and groundwater conditions may be found in localized areas during construction. Therefore, we should be engaged to provide observation and testing during the geotechnical aspects of construction, during which time we may make changes to our recommendations, if deemed necessary.

We appreciate the opportunity to provide our services to you on this project. If you have any questions, please call.

Sincerely yours,
ROCKRIDGE GEOTECHNICAL, INC.

REGISTERED PROFESSIONAL ENGINEER LOGAN D. MEDEIROS NO. C71574 Exp. 12/31/11 CIVIL STATE OF CALIFORNIA

REGISTERED PROFESSIONAL ENGINEER CRAIG S. SHIELDS GE2116 3/31/13 GEOTECHNICAL STATE OF CALIFORNIA

Logan D. Medeiros, P.E.
Senior Project Engineer

Craig S. Shields, P.E., G.E.
Principal Geotechnical Engineer

ROCKRIDGE GEOTECHNICAL

TABLE OF CONTENTS

1.0 INTRODUCTION 1

2.0 PREVIOUS GEOTECHNICAL INVESTIGATIONS 2

3.0 SCOPE OF SERVICES 3

4.0 SUBSURFACE CONDITIONS 4

5.0 SEISMIC CONSIDERATIONS 5
- 5.1 Regional Seismicity and Faulting 5
- 5.2 Geologic Hazards 7
  - 5.2.1 Liquefaction and Liquefaction-Induced Settlement 8
  - 5.2.2 Liquefaction-Induced Ground Failure 10
  - 5.2.3 Cyclic Densification 10
  - 5.2.4 Ground Surface Rupture 11

6.0 DISCUSSION AND CONCLUSIONS 12
- 6.1 Expansive Soil 12
- 6.2 Settlement of Roadway Fills 13

7.0 RECOMMENDATIONS 15
- 7.1 Site Preparation, Grading and Fill Placement 15
  - 7.1.1 Soil Subgrade Stabilization 17
  - 7.1.2 Roadway Fill Slopes 19
  - 7.1.3 Utilities 19
- 7.2 Pavements 20
  - 7.2.1 Rigid (Portland Cement Concrete) Pavement 21
  - 7.2.2 Flexible (Asphalt Concrete) Pavement Design 22
  - 7.2.3 Concrete Pavers 23
- 7.3 Landscaping 27
- 7.4 Seismic Design 27
- 7.5 Soil Corrosivity 28

8.0 GEOTECHNICAL ENGINEERING SERVICES DURING CONSTRUCTION 29

9.0 LIMITATIONS 29

REFERENCES

FIGURES

APPENDIX A – Logs of Borings, Cone Penetration Test Results, and Laboratory Test Results by Rockridge Geotechnical

APPENDIX B – Logs of Borings, Cone Penetration Test Results, and Laboratory Test Results by AMEC

APPENDIX C – Cone Penetration Test Results by Geomatrix

LIST OF FIGURES

Figure 1	Site Location Map
Figure 2	Site Plan
Figure 3	Map of Major Faults and Earthquake Epicenters in the San Francisco Bay Area
Figure 4	Seismic Hazard Zones Map
Figure 5	Generalized ICPI Permeable Paver Detail

APPENDIX A

Logs of Borings, Cone Penetration Test Results, and Laboratory Test Results by Rockridge Geotechnical

APPENDIX B

Logs of Borings, Cone Penetration Test Results, and Laboratory Test Results by AMEC

APPENDIX C

Cone Penetration Test Results by Geomatrix

REVISED GEOTECHNICAL CONSULTATION
MACARTHUR TRANSIT VILLAGE – INFRASTRUCTURE
MACARTHUR BART STATION
Oakland, California

1.0 INTRODUCTION

This report presents the results of the geotechnical consultation by Rockridge Geotechnical, Inc. for the proposed infrastructure improvements to be constructed for the MacArthur Transit Village (MTV) development in Oakland, California. The subject property is currently the MacArthur BART Station parking lot, which lies between Highway 24, 40th Street, Telegraph Avenue, and MacArthur Boulevard, as shown on the Site Location Map, Figure 1.

The BART parking lot is a depressed area that lies about 3 to 13 feet below adjacent City streets and neighboring properties. The current MTV development plan divides the site into six parcels, designated Parcel A through E, and includes new internal streets that connect the parcels to 40th Street, MacArthur Boulevard, Telegraph Avenue, and the BART Plaza, as shown on the Site Plan, Figure 2. The new streets will require significant fills to be placed above existing grades. The majority of the site is currently a relatively flat, asphalt-paved parking lot, with existing ground surface elevations ranging from approximately 64.7 to 65.8 feet[1]. The surrounding streets and sidewalks are at about Elevation 75 to 79 feet along the northern property line (40th Street), Elevation 65 to 66 feet along the southern property line (MacArthur Boulevard), and Elevation 71 to 79 feet along the eastern property line (adjacent commercial properties and Telegraph Avenue). The proposed buildings to be constructed at Parcels A through D, will each include a below-grade level, with an approximate top-of-slab elevation of about 61 feet. Based on the preliminary grading plan and street profiles, prepared by Sandis Civil Engineers, dated November 23, 2010, we understand the new streets will require the following approximate fill thicknesses above existing grades:

[1] Elevations referenced in this report are based on site survey presented on drawing set titled MacArthur Transit Village site Development, prepared by Sandis Civil Engineers, dated November 23, 2010 (City of Oakland Datum).

- ***Frontage Road*** – Little to no new fill on south end at MacArthur Boulevard, and up to 2 feet of fill on north end near BART Plaza.

- ***Plaza Way*** – Approximately 2 feet of new fill on south end, transitioning to no fill on north end at 40th Street.

- ***Internal Street*** – Little to no new fill on south end at MacArthur Boulevard, with an abrupt transition to about 4 feet at the south end of Block D (existing slope) and transitioning to about 11 feet at the north end at the Village Drive intersection

- ***Village Drive*** – Approximately 8 to 11 feet of new fill on the western two-thirds with an abrupt transition to approximately no fill from the east edge of Parcel A (existing slope) to Telegraph Avenue.

- ***Apgar Street*** – Little to no new fill is planned for this existing street.

The proposed infrastructure improvements will include new vehicular pavements, consisting of asphalt concrete (AC), Portland cement concrete (PCC), and both permeable and non-permeable interlocking concrete pavers (ICP). New pedestrian areas will consist of concrete flatwork, permeable ICP, and non-permeable pavers. Landscaped zones and tree wells will also be constructed within the pedestrian areas adjacent to the new streets. The development will also include new underground utilities beneath the new streets, including 12- to 24-inch-diamter storm drain lines, 6- to 8-inch-diameter sanitary sewer lines, and 8- to 12-inch-diameter water lines. Our understanding of the proposed infrastructure improvements are based on preliminary plans prepared by Sandis Civil Engineers and PGA Design Landscape Architects.

2.0 PREVIOUS GEOTECHNICAL INVESTIGATIONS

Four previous geotechnical investigations have been performed to-date for the MacArthur Transit Village project. In 2004, Geomatrix Consultants, Inc. (now AMEC Geomatrix, Inc.) performed a preliminary geotechnical investigation and prepared a report titled *Preliminary Geotechnical Investigation, Proposed MacArthur BART Transit Village, Oakland, California*,

dated November 18, 2004. AMEC Geomatrix, Inc. (AMEC) subsequently performed a final geotechnical investigation for the proposed parking structure (Parcel E on Figure 2), the results of which were presented in a report titled *Geotechnical Evaluation, BART MacArthur Parking Structure, West MacArthur Blvd. at BART Station, Oakland, California*, dated September 28, 2010.

Rockridge Geotechnical performed a supplemental geotechnical investigation for the Parcel E parking structure, as well as a geotechnical investigation for the Block D residential structure, the results of which are presented under separate covers.

The approximate locations of the previous geotechnical borings and cone penetration tests (CPTs) within the MTV site are shown on Figure 2. Logs of borings and CPTs previously performed by Rockridge Geotechnical are presented in Appendix A. Logs of borings and CPTs previously performed by AMEC are presented in Appendix B. Logs of CPTs previously performed by Geomatrix are presented in Appendix C.

3.0 SCOPE OF SERVICES

Our consultation was performed in accordance with our Agreement for Professional Services with MacArthur Transit Community Partners, dated May 3, 2011. Our scope of work consisted of reviewing existing subsurface data for the site, performing engineering analyses, and developing conclusions and recommendations regarding:

- soil and groundwater conditions at the site
- site grading and excavation, including criteria for fill quality
- estimates of ground settlement under static and seismic conditions
- subgrade preparation for vehicular and pedestrian pavements
- design sections for flexible, rigid, and permeable pavements
- site seismicity and seismic hazards, including the potential for liquefaction and lateral spreading, and total and differential settlement resulting from liquefaction and/or cyclic densification
- 2010 California Building Code site class and design spectral response acceleration parameters

- corrosivity of the near-surface soil and the potential effects on buried concrete and metal structures and foundations
- construction considerations.

4.0 SUBSURFACE CONDITIONS

The results of previous borings and CPTs indicate the site is generally underlain by heterogeneous alluvial fan and fluvial deposits consisting of moderate to high plasticity clay with varying sand and gravel content, interbedded with discontinuous layers of loose to very dense sand and gravel with varying clay content. The upper clay is generally stiff to very stiff with moisture contents ranging from 20 to 29 percent above the groundwater table and medium stiff to stiff below the groundwater table. Atterberg limits tests performed on the near-surface clay indicate it is highly expansive with plasticity indices (PIs) ranging from 25 to 33. A laboratory test performed on a bulk sample of the upper five feet of soil from boring B-AG-2 indicates the resistance value (R-value) of the soil is 10.

Groundwater measurements taken during previous investigations indicate a water level gradient across the site, with the high point likely in the northeast corner. At Parcel D, the depth to groundwater ranged from 7 to 13 feet bgs, which correspond to elevations ranging from about 52 to 59 feet. At Parcel E, the depth to groundwater ranged from 10.5 feet to 13 feet, which correspond to elevations ranging from about 54 to 55 feet. Groundwater measurements within and near Parcel A indicate water is at Elevation 58 to 64 feet. Note that the high water level (Elevation 64 feet) was estimated from a pore pressure dissipation test in CPT-GM-1, and is not considered as reliable as measurements taken from borings and monitoring wells.

The depth to groundwater at the site is expected to fluctuate several feet seasonally. Based on our experience, we estimate the groundwater table may rise up to three feet above the levels measured in March, 2011 during years with above-average rainfall.

5.0 SEISMIC CONSIDERATIONS

Because the project site is in a seismically active region, we evaluated the potential for earthquake-induced geologic hazards including ground shaking, ground surface rupture, liquefaction,[2] lateral spreading,[3] cyclic densification[4]. The results of our evaluation regarding seismic considerations for the project site are presented in the following sections.

5.1 Regional Seismicity and Faulting

The site is located in the Coast Ranges geomorphic province that is characterized by northwest-southeast trending valleys and ridges. These are controlled by folds and faults that resulted from the collision of the Farallon and North American plates and subsequent shearing along the San Andreas Fault system. Movements along this plate boundary in the Northern California region occur along right-lateral strike-slip faults of the San Andreas Fault system.

The major active faults in the area are the Hayward, Rodgers Creek, San Andreas, San Gregorio, and Calaveras faults. A map showing active faults in the San Francisco Bay Area is shown on Figure 3. For active faults within a 50-kilometer radius of the site, the distance from the site and estimated maximum Moment magnitude5 [Working Group on California Earthquake Probabilities (WGCEP) (2008) and Cao et al. (2003)] are summarized in Table 1.

---

[2] Liquefaction is a phenomenon where loose, saturated, cohesionless soil experiences temporary reduction in strength during cyclic loading such as that produced by earthquakes.

[3] Lateral spreading is a phenomenon in which surficial soil displaces along a shear zone that has formed within an underlying liquefied layer. Upon reaching mobilization, the surficial blocks are transported downslope or in the direction of a free face by earthquake and gravitational forces.

[4] Cyclic densification is a phenomenon in which non-saturated, cohesionless soil is compacted by earthquake vibrations, causing ground-surface settlement.

[5] Moment magnitude is an energy-based scale and provides a physically meaningful measure of the size of a faulting event. Moment magnitude is directly related to average slip and fault rupture area.

TABLE 1

Regional Faults and Seismicity

Fault Segment	Approximate Distance from Site (km)	Direction from Site	Mean Characteristic Moment Magnitude
Total Hayward	4	Northeast	7.0
Total Hayward-Rodgers Creek	4	Northeast	7.3
Mount Diablo Thrust	21	East	6.7
Total Calaveras	23	East	7.0
N. San Andreas – Peninsula	25	West	7.2
N. San Andreas (1906 event)	25	West	8.1
Green Valley Connected	25	East	6.8
N. San Andreas - North Coast	28	West	7.5
San Gregorio Connected	31	West	7.5
Rodgers Creek	33	Northwest	7.1
West Napa	38	North	6.7
Greenville Connected	39	East	7.0
Great Valley 5, Pittsburg Kirby Hills	43	East	6.7
Monte Vista-Shannon	43	South	6.5

Since 1800, four major earthquakes have been recorded on the San Andreas Fault. In 1836, an earthquake with an estimated maximum intensity of VII on the Modified Mercalli (MM) scale occurred east of Monterey Bay on the San Andreas Fault (Toppozada and Borchardt 1998). The estimated Moment magnitude, Mw, for this earthquake is about 6.25. In 1838, an earthquake occurred with an estimated intensity of about VIII-IX (MM), corresponding to an Mw of about 7.5. The San Francisco Earthquake of 1906 caused the most significant damage in the history of the Bay Area in terms of loss of lives and property damage. This earthquake created a surface

rupture along the San Andreas Fault from Shelter Cove to San Juan Bautista approximately 470 kilometers in length. It had a maximum intensity of XI (MM), an Mw of about 7.9, and was felt 560 kilometers away in Oregon, Nevada, and Los Angeles. The most recent earthquake to affect the Bay Area was the Loma Prieta Earthquake of 17 October 1989 with an Mw of 6.9. This earthquake occurred in the Santa Cruz Mountains approximately 94 kilometers southwest of the site.

In 1868, an earthquake with an estimated maximum intensity of X on the MM scale occurred on the southern segment (between San Leandro and Fremont) of the Hayward Fault. The estimated Mw for the earthquake is 7.0. In 1861, an earthquake of unknown magnitude (probably an Mw of about 6.5) was reported on the Calaveras Fault. The most recent significant earthquake on this fault was the 1984 Morgan Hill earthquake (Mw = 6.2).

The U.S. Geological Survey's 2007 Working Group on California Earthquake Probabilities has compiled the earthquake fault research for the San Francisco Bay area in order to estimate the probability of fault segment rupture. They have determined that the overall probability of moment magnitude 6.7 or greater earthquake occurring in the San Francisco Bay Region during the next 30 years is 63 percent. The highest probabilities are assigned to the Hayward/Rodgers Creek Fault and the northern segment of the San Andreas Fault. These probabilities are 31 and 21 percent, respectively (USGS, 2008).

5.2 Geologic Hazards

During a major earthquake on a segment of one of the nearby faults, strong to very strong ground shaking is expected to occur at the project site. Strong shaking during an earthquake can result in ground failure such as that associated with soil liquefaction, lateral spreading, and cyclic densification. Because the borings were drilled with hollow-stem augers, which may provide unreliable SPT blowcount data for liquefaction analyses due to soil disturbance during drilling, we used the results of the CPTs to evaluate the potential of these phenomena occurring at the project site. The results of laboratory tests (fines content and Atterberg limits) on samples obtained from our borings were also considered in our liquefaction analyses.

5.2.1 Liquefaction and Liquefaction-Induced Settlement

As shown on Figure 4, the project site is within an area that has been mapped as a designated seismic hazard zone, as shown on the map titled State of California Seismic Hazard Zones, Oakland West Quadrangle, prepared by the California Geological Survey (CGS), dated 14 February 2003. This map was prepared in accordance with the Seismic Hazards Mapping Act of 1990. Special Publication 117 by CGS (2008) recommends subsurface investigations in mapped liquefaction potential areas be performed using rotary-wash borings and/or cone penetration tests.

Soil susceptible to liquefaction includes loose to medium dense sand and gravel, low-plasticity silt, and some low-plasticity clay deposits. Flow failure, lateral spreading, differential settlement, loss of bearing strength, ground fissures and sand boils are evidence of excess pore pressure generation and liquefaction.

We evaluated the liquefaction potential of soil encountered below groundwater at the site using data collected in our CPTs, as well as the CPTs performed by others. Our liquefaction analysis was performed in accordance with the methodology presented in the publication titled Proceeding of the NCEER Workshop on Evaluation of Liquefaction Resistance of Soils, prepared by the National Center for Earthquake Engineering Research (NCEER), dated December 31, 1997. The analysis was performed using a groundwater depth of 7 feet bgs. We used a design peak ground acceleration (PGA) of 0.44g and a Moment Magnitude 7.3 for our analyses.

The results of the liquefaction analyses indicate there are numerous thin layers of potentially liquefiable soil ranging from about 1/2 to 3-1/2 feet thick between depths of 11 and 78 feet bgs across the site. In addition, a thicker potentially liquefiable layer was encountered in Parcel E between depths of about 41 and 54 feet bgs in four of the CPTs (CPT-RR-6, CPT-RR-8, CPT-AG-1, and CPT-AG-3). Where encountered, this layer ranges in thickness from about 4-1/2 to 8 feet. Another thicker potentially liquefiable layer was encountered between a depth of about 16 and 23 feet bgs in CPT-RR-3, located in the northwest corner of Parcel D.

Using the Tokimatsu and Seed (1987) method for evaluating earthquake-induced liquefaction settlement, we estimate that settlement associated with liquefaction after a large seismic event on a nearby fault will range from about 1/2 to 2-1/2 inches across the MTV site, as presented in Table 2.

TABLE 2
Estimated Liquefaction-Induced
Ground Surface Settlement

CPT No.	Estimated Liquefaction-Induced Settlement (inches)
CPT-RR-1	3/4
CPT-RR-2	2-1/2
CPT-RR-3	1-1/2
CPT-RR-4	1-3/4
CPT-RR-5	1-1/2
CPT-RR-6	2-1/4
CPT-RR-7	1-1/4
CPT-RR-8	1-1/2
CPT-GM-1	1
CPT-GM-2	2-1/2
CPT-GM-3	1/2
CPT-GM-4	1-1/2
CPT-GM-5	3/4
CPT-GM-6	1/2
CPT-AG-1	1-1/2
CPT-AG-1A	1
CPT-AG-2	1
CPT-AG-3	2-1/4

5.2.2 Liquefaction-Induced Ground Failure

The potential for liquefaction-induced ground failure depends on the thickness of the liquefiable soil layer relative to the thickness of the overlying non-liquefiable material. Ishihara (1985) presented empirical relationship that provides criteria that can be used to evaluate whether liquefaction-induced ground failure, such as sand boils, would be expected to occur under a given level of shaking for a liquefiable layer of given thickness overlain by a resistant, or protective, surficial layer.

The potentially liquefiable soil layers encountered in the CPTs are generally thin and are at least 11 feet below existing grades. The proposed infrastructure improvements will include placement of additional fill over much of the site. Considering the uppermost potentially liquefiable layers are relatively thin and are covered by at least 11 feet of non-liquefiable material, we conclude the potential for surface manifestation of the liquefaction to be very low.

Lateral spreading is a phenomenon in which a surficial soil displaces along a shear zone that has formed within an underlying liquefied layer. The surficial blocks are transported downslope or in the direction of a free face, such as a channel, by earthquake and gravitational forces. Lateral spreading is generally the most pervasive and damaging type of liquefaction-induced ground failure generated by earthquakes.

Although numerous thin, potentially liquefiable layers were encountered, the layers do not appear to be continuous and the topography of the site and surrounding area is relatively flat. Therefore we conclude the risk of lateral spreading is very low.

5.2.3 Cyclic Densification

Cyclic densification (also referred to as differential compaction) of non-saturated sand (sand above groundwater table) can occur during an earthquake, resulting in settlement of the ground surface and overlying improvements. The soil above the groundwater table at the site consists of

clay that is not susceptible to cyclic densification. Therefore, we conclude the potential for cyclic densification at the site is very low.

5.2.4 Ground Surface Rupture

Historically, ground surface displacements closely follow the trace of geologically young faults. The site is not within an Earthquake Fault Zone, as defined by the Alquist-Priolo Earthquake Fault Zoning Act, and no known active or potentially active faults exist on the site. We therefore conclude the risk of fault offset at the site from a known active fault is very low. In a seismically active area, the remote possibility exists for future faulting in areas where no faults previously existed; however, we conclude the risk of surface faulting and consequent secondary ground failure from previously unknown faults is also very low.

6.0 DISCUSSION AND CONCLUSIONS

We conclude that from a geotechnical engineering standpoint, the proposed infrastructure improvements can be constructed as planned, provided the recommendations presented in this report are incorporated into the project plans and specifications and implemented during construction. The primary geotechnical issues for the design of this project are: 1) the presence of highly expansive near-surface soil, 2) the potential for up to 2-1/2 inches of liquefaction-induced ground surface settlement following a major earthquake, and 3) the presence of random weak, moderately compressible clay and silt layers beneath the site. These and other issues are discussed in this section.

6.1 Expansive Soil

The near-surface clay encountered in the borings is highly expansive. Expansive soil is subject to volume changes resulting from fluctuations in moisture content. These volume changes can cause cracking of foundations, pavements, and concrete flatwork. Therefore, slabs and pavements that are constructed on expansive soil subgrade should be designed and constructed to resist the effects of the expansive soil. These effects can be mitigated by properly managing surface and subsurface drainage, moisture conditioning the expansive soil during fill placement, and providing select, non-expansive fill below slabs and pavements to help reduce deformation as the underlying soil shrinks and swells.

In addition, on expansive soil sites it is critical to properly manage surface and subsurface drainage to prevent water from collecting beneath pavements and slabs, where it can lead to cyclic swelling and shrinking of the subgrade soil and can cause subgrade instability under vehicular loads. We understand the pedestrian and vehicular pavements planned for this site will consist of a variety of both permeable and impermeable surfaces and will be constructed in close proximity to tree wells and irrigated landscaped zones. While the objective of permeable pavement systems is to allow for water storage and infiltration, we conclude that infiltration into the subgrade soil is not feasible at this site due to the low permeability of the expansive clay. From a geotechnical standpoint, water should not be allowed to collect beneath pavements and

flatwork. This can be achieved by providing subdrain systems beneath permeable surfaces and installing vertical barriers between permeable surfaces underlain by subdrains and non-permeable surfaces underlain by conventional aggregate base. In addition, to prevent the subgrade soil from becoming saturated, we conclude that permeable aggregate base courses should be underlain by an impermeable liner in zones subject to vehicular traffic. The Interlocking Concrete Pavement Institute (ICPI) has prepared a technical guidance manual (ICPI 2005) for the selection, design, construction, and maintenance of permeable interlocking concrete pavements (ICP). Our recommendations for the design and construction of permeable pavements at this site are presented in Section 7.2 and are in general accordance with the ICPI guidelines.

We understand the material excavated during the construction of the proposed Parcel E parking structure and the Parcel D residential building will be used to construct portions of the proposed roadways. Based on our discussions with the design team, we expect the quantity of soil generated from these excavations will be insufficient to complete the roadway embankments and therefore imported soil will likely be required. To reduce the impacts of expansive soil on the proposed improvements, the on-site expansive soil should be reserved for the deeper portions of the roadway fills, where it is less likely to experience seasonal fluctuations in moisture content. Ideally, imported soil that is non-expansive should be used for the remainder of the new roadway fills. However, considering non-expansive, "select" fill is not commonly available at local sites, it may not be economical to import non-expansive fill for the balance of the roadway embankments. Therefore, we conclude that moderately expansive soil with a plasticity index less than 20, which is often available locally, may be used for the roadway fills, provided it is not used in the upper two feet of soil subgrade. Recommendations for grading and pavement design sections presented in Section 7 of this report are based on the assumption that non-expansive fill will be imported and used for at least the upper two feet of soil subgrade.

6.2 Settlement of Roadway Fills

The proposed roadway fills, which range from 0 to 11 feet in thickness, will lead to ground settlement due to compression of the underlying medium stiff to stiff clay under static load

conditions. Due to the highly varying fill thickness proposed for the new streets, the anticipated ground settlements will vary significantly across the site. Table 3 presents estimates of ground surface settlement under the weight of various fill thicknesses.

TABLE 3
Estimated Consolidation Settlement
Beneath Roadway Fills

New Fill Thickness (feet)	Estimated Ground Surface Settlement (inches)
2	1/4
4	1/2
6	1
8	1-1/4
10	1-3/4
12	2-1/4

Most of the anticipated settlement will likely occur during construction. Based on the preliminary project phasing plan, we understand that the new utility lines will be installed following completion of the roadway fills. Unless the new utilities will be designed to accommodate the differential settlements presented in Table 3, new utility lines should be installed after at least 90 percent of the anticipated consolidation settlement has occurred, which we estimate to be about 2 to 4 months following placement of the fill. Consolidation settlement of the underlying clay may occur faster than 2 to 4 months. The actual rate of embankment settlement should be evaluated through survey monitoring of settlement monuments during construction.

7.0 RECOMMENDATIONS

Recommendations for site grading, fill criteria and compaction, permanent slopes, pavement design, and seismic design are presented in the remainder of the report.

7.1 Site Preparation, Grading and Fill Placement

Prior to grading operations, any existing asphalt pavement and concrete slabs should be excavated and removed from the areas to be filled. Alternatively, where new roadway embankments will be built, the asphalt may be broken up and left in place, if acceptable from an environmental standpoint. If the asphalt is left in place, it should be broken up into small pieces such that it will not hinder subsequent trenching operations for underground utilities. The concrete and asphalt can also be reused as engineered fill provided it is acceptable from an environmental standpoint and the materials are broken into pieces smaller than four inches in greatest dimension. If used as engineered fill, these materials should be mixed with sufficient fine-grained material to minimize the presence of voids. In the locations of the proposed roadway fills, site clearing should include removal of any vegetation and organic topsoil (where present). Tree roots with a diameter greater than 1/2 inch within three feet of subgrade should be removed. Existing utility lines may be abandoned in place by grouting. If the lines will interfere with new construction, they should be removed.

The subgrade exposed beneath existing pavements will likely be wet and potentially sensitive to disturbance from heavy equipment. If soft, unstable areas are exposed, subgrade stabilization measures, as detailed in Section 7.1.1, may be necessary prior to building the new roadway fills.

Where the new roadway fills will intersect the existing vegetated slopes, the slopes should be stripped of all organic materials and loose soil. The new fills should be built up on a series of horizontal benches cut into the existing slope at an equivalent slope no steeper than 1.5:1 (horizontal:vertical). Benching into the existing slopes should be performed under the observation of our field engineer, who can verify that the benches extend into competent material.

Where the on-site expansive clay is placed as fill for the new roadways, we recommend it be reserved for the deeper portions of the embankments and that it not be used for the upper two feet of soil subgrade for the new streets. In addition, where the new roadway fills will be greater than five feet, we recommend the on-site, highly expansive clay be reserved for the zone below the upper five feet of soil subgrade. We recommend the upper two feet of soil subgrade consist of imported non-expansive, "select" fill with a liquid limit less than 40 and plasticity index less than 12. Imported material placed above the on-site highly expansive clay and below the non-expansive select fill should consist of material with a plasticity index less than 20. All imported fill should consist of material that is free of organic matter, contains no rocks or lumps larger than three inches in greatest dimension, and is approved by the geotechnical engineer. Samples of proposed fill material should be submitted to the geotechnical engineer at least five business days prior to use at the site. The grading contractor should provide analytical test results or other suitable environmental documentation indicating the imported fill is free of hazardous materials at least three days before use at the site. If this data is not provided, a minimum of two weeks will be required to perform any necessary analytical testing.

Where on-site or imported expansive clay is placed as fill and the final fill thickness will be less than five feet, the material should be moisture-conditioned to at least four percent above optimum moisture content, and compacted to between 88 and 93 percent (RC)[6]. Where on-site or imported expansive clay is placed as fill greater than five feet in thickness, the material should be moisture-conditioned to at least four percent above optimum moisture content, and compacted to at least 90 percent RC. Moisture conditioning may require aerating to lower the moisture content. Select fill should be moisture-conditioned to above optimum moisture content, and compacted to at least 90 percent RC. Select fill greater than five feet in thickness, as well as the upper six inches of soil subgrade beneath vehicular pavements, should be compacted to 95 percent RC. All fill should be placed and compacted in lifts not exceeding eight inches in loose thickness.

---

[6] Relative compaction refers to the in-place dry density of soil expressed as a percentage of the maximum dry density of the same material, as determined by the ASTM D1557 laboratory compaction procedure.

We recommend a minimum of six inches of Class 2 aggregate base (AB) be placed beneath proposed exterior concrete flatwork and non-permeable pavers that will not receive vehicular traffic, where the soil subgrade consists of on-site expansive clay. Where the soil subgrade consists of imported select fill, a minimum of 4 inches of AB should be placed beneath exterior concrete flatwork and non-permeable pedestrian pavers. The AB should extend at least six inches beyond the slab edges. Prior to placement of the AB, the soil subgrade should be scarified to a depth of at least eight inches, moisture-conditioned, and compacted to the appropriate level for the particular subgrade material (select or expansive). The subgrade should be kept moist until covered with AB. AB placed beneath exterior slabs-on-grade, such as sidewalks, should be moisture-conditioned and compacted in accordance with the requirements provided above for select fill.

Recommendations regarding gradation criteria, as well as placement and compaction of the aggregate base, subbase, and bedding courses for permeable paver systems are presented in Section 7.2.3.

7.1.1 Soil Subgrade Stabilization

In some areas, soft, wet soil may be exposed during excavation, especially near the groundwater table, causing the subgrade to deflect and rut under the weight of grading equipment. In these areas, some form of subgrade stabilization may be required. Several options for stabilizing subgrade are presented below.

<u>Aeration</u>

Aeration consists of mixing and turning the soil to naturally lower the moisture content to an acceptable level. Aeration typically requires several days to a week of warm, dry weather to effectively dry the material. Material to be dried by aeration should be scarified to a depth of at least 12 inches; the scarified material should be turned at least twice a day to promote uniform drying. Once the moisture content of the aerated soil has been reduced to acceptable levels, the soil should be compacted in accordance with our previous recommendations. Aeration is

typically the least costly subgrade stabilization alternative; however, it generally requires the most time to complete and may not be effective in locations where the excavation is near the groundwater table.

Overexcavation

Another method of achieving suitable subgrade in areas where soft, wet soil is exposed is to overexcavate the soft subgrade soil and replace it with drier, granular material. If the soft material extends to great depths, the upper 18 to 24 inches of soft material may be overexcavated and a geotextile tensile fabric (Mirafi 500X or equivalent) placed beneath the granular backfill to help span over the weaker material. The fabric should be pulled tight and placed at the base of the overexcavation, extending at least two feet laterally beyond the limits of the overexcavation in all directions. The fabric should be overlapped by at least two feet at all seams. Granular material such as Class 2 aggregate base should then be placed and compacted over the geotextile tensile fabric. Where the overexcavation extends below the groundwater, the granular backfill should consist of drain rock. Drain rock should be overlain by geotextile filter or tensile fabric (Mirafi 140NC or equivalent) to form a separation between the open graded rock and soil backfill placed above the rock.

Where very soft subgrade conditions are encountered, a bi-directional geogrid, such as Tensar BX-1200 or equivalent, may be required in lieu of tensile fabric. Where geogrids are used the depth of overexcavation will likely be on the order of 12 to 18 inches. The geogrids should be overlapped by at least two feet and tied with hog rings or nylon ties at a spacing not to exceed 10 feet. The geogrids should be covered with a well-graded granular fill such as Class 2 AB; open-graded rock should not be used. All backfill placed over the geogrid should be compacted in accordance with our previous recommendations.

Chemical Treatment

Lime and/or cement have been successfully used to dry and stabilize fine-grained soils with varying degrees of success. Lime- and/or cement-treatment will generally decrease soil density, change its plasticity properties, and increase its strength. The degree to which lime will react

with soil depends on such variables as type of soil, mineralogy, quantity of lime, and length of time the lime-soil mixture is cured. Cement is generally used when a significant amount of granular material or low-plasticity silt is present in the soil. The quantity of lime and/or cement added generally ranges from 3 to 7 percent by weight and should be determined by laboratory testing. The specialty contractor performing the chemical treatment should select the most appropriate additive and quantity for the soil conditions encountered.

If chemical treatment is used to stabilize soft subgrade, a treatment depth of about 18 inches below the final soil subgrade will likely be required. The soil being treated should be scarified and thoroughly broken up to full depth and width. The treated soil should not contain rocks or soil clods larger than three inches in greatest dimension. Treated soil should be compacted to at least 90 percent RC, and at least 95 percent RC in the upper six inches of pavement subgrade.

7.1.2 Roadway Fill Slopes

Following construction of the infrastructure improvements and prior to development of the surrounding Parcels A through C, the new roadway embankments will be sloped down to the adjacent undeveloped parcels. New pedestrian walkways and landscaped improvements are planned alongside Internal Street and Village Drive. We recommend the embankments be constructed such that the final top-of-slope is at least two feet beyond the outer edge of sidewalks and have a maximum slope of 2:1 (horizontal:vertical). To promote proper compaction of the finished grade, all finished fill slopes should be overbuilt and trimmed back to the design slope. We recommend protecting the fill slopes against erosion by track-walking and seeding or hydromulching after construction is complete. If the vegetation will not be established prior to the rainy season, slopes should be protected using measures such as netting, hay bales, and/or silt fences.

7.1.3 Utilities

As discussed in Section 6, the new roadways will experience ground surface settlement due to the compression of the underlying clay soil in the months following fill placement, as well as due to liquefaction during a major earthquake. Based on the preliminary project phasing plan, we

understand that the new utility lines will be installed following completion of the roadway fills. We recommend the roadway fills be completed at least 2 to 4 months prior to installation of underground utilities. The actual rate of embankment settlement should be evaluated through survey monitoring of settlement monuments during construction. Based on data collected during settlement monitoring, we can re-evaluate the recommended time frame, which may be shorter than 2 to 4 months. Utility conduits should be designed to have sufficient flexibility to resist differential settlement associated with liquefaction following a major earthquake, as discussed in Section 5.2.

The thickness and type of bedding material required for underground utilities will depend on the soil conditions at the utility trench bottom. As a minimum, bedding should extend at least D/4 (with D equal to the outside pipe diameter) below the bottom of the pipe. However, the bedding should be at least four inches thick. This minimum bedding thickness and either clean sand, rod mill or pea gravel bedding material is adequate for shallow trenches above the groundwater level. For utilities that extend below the groundwater table, we recommend using at least 18 inches of crushed rock bedding.

Backfill for utility trenches should be compacted according to the recommendations presented for general site fill. Jetting of trench backfill should not be permitted. The soil excavated from the trenches can be reused to backfill the trenches, provided the material can be compacted to the required compaction. If sand or gravel with less than 10 percent fines (particles passing the No. 200 sieve) is used or more than five feet of backfill will be placed, it should be compacted to at least 95 percent relative compaction. Pea gravel, drain rock, and rod mill should be mechanically tamped in 12-inch lifts where placed beneath pavements. Special care should be taken when backfilling utility trenches in pavement areas. Poor compaction may cause excessive settlements, resulting in damage to the pavement section.

7.2 Pavements

Based on the preliminary civil and landscape drawings, we understand several different pavement types and levels of traffic demand are being incorporated into the proposed

infrastructure improvements. The following sections present geotechnical recommendations for the design and construction of rigid concrete and flexible asphalt vehicular pavements, as well as concrete pavers for both vehicular and pedestrian surfaces.

For the preliminary design of each pavement type, we have assumed a resistance value (R-value) of 10 for the subgrade soil, which is consistent with the laboratory test performed on a soil sample from boring B-AG-2. As previously discussed, the upper two feet or more of roadway subgrade will likely consist of imported soil. If the imported soil consists of select fill as described in Section 7.1, it may have a higher R-value than that assumed for preliminary design. Once the proposed import material has been determined, it may be beneficial to revise the recommended design pavement sections presented in this report.

For all impermeable pavement types, to prevent irrigation water from entering the pavement sections, curbs adjacent to landscaped areas should extend through the aggregate base and at least three inches into the underlying clay. In addition, permeable pavement sections should incorporate a vertical impermeable barrier where they are immediately adjacent to non-permeable pavements and flatwork.

7.2.1 Rigid (Portland Cement Concrete) Pavement

The American Concrete Institute guidelines (ACI 330R-01) were used to develop recommended Portland cement concrete (PCC) pavement sections. Based on traffic indices (TIs) of 6.0, 7.0, and 9.5, as provided by the project civil engineer, the minimum recommended PCC pavement sections are presented in Table 4.

TABLE 4
Recommended Pavement Sections

TI	Portland Cement Concrete (inches)	Class 2 Aggregate Base R = 78 (inches)
6.0	6.0	6.0
7.0	6.5	6.0
9.5	7.5	6.0

The modulus of rupture and unconfined compressive strength of the concrete should be at least 500 and 3,200 pounds per square inch (psi) at 28 days, respectively. Contraction joints should be placed at maximum spacing of 15 feet. Where the outer edge of a concrete pavement meets asphalt pavement or interlocking concrete pavers, the concrete slab should be thickened by 50 percent at a taper not to exceed a slope of 1 in 10. The pavement should be reinforced with a minimum of No. 4 bars at 18 inches on center in both directions.

The soil subgrade beneath PCC pavements should be prepared and compacted in accordance with the recommendations presented in Section 7.1. In addition, the subgrade should be a firm and non-yielding surface. The subgrade should be proof-rolled to confirm it is non-yielding prior to placing the AB. The Class 2 AB should be moisture-conditioned to near optimum moisture content and compacted to at least 95 percent RC.

7.2.2 Flexible (Asphalt Concrete) Pavement Design

The State of California flexible pavement design method was used to develop the recommended asphalt concrete (AC) pavement sections. Design sections were developed based on traffic indices (TIs) of 7.0 and 9.5, as provided by the project civil engineer. Recommended pavement sections for these traffic indices are presented in Table 5.

TABLE 5
Recommended Asphalt Pavement Sections

TI	Asphaltic Concrete (inches)	Class 2 Aggregate Base R = 78 (inches)
7.0	4.0	15
9.5	6.0	20

The soil subgrade beneath AC pavements should be prepared and compacted in accordance with the recommendations presented in Section 7.1. In addition, the subgrade should be a firm and non-yielding surface. The subgrade should be proof-rolled to confirm it is non-yielding prior to placing the AB. The Class 2 AB should be moisture-conditioned to near optimum moisture content and compacted to at least 95 percent RC.

7.2.3 Concrete Pavers

Non-Permeable Concrete Pavers

We understand non-permeable concrete pavers for pedestrian and vehicular traffic will be incorporated into the design. We recommend non-permeable pedestrian pavers and sand bedding be underlain by at least six inches of Class 2 AB compacted to at least 90 percent RC. We recommend non-permeable pavers subject to vehicular traffic be underlain by AB compacted to at least 95 percent RC. The AB thickness beneath non-permeable pavers subject to vehicular traffic should be consistent with that recommended in Table 5 for asphalt pavement for the appropriate traffic index.

Permeable Interlocking Concrete Pavers

As discussed in Section 6.1, we recommend permeable interlocking concrete pavements (ICP) be designed in accordance with the guidelines presented by the Interlocking Concrete Pavement Institute (ICPI 2005). These guidelines include specific recommendations for permeable aggregate subbase, base, and bedding courses to be placed beneath ICP pavements. We

recommend permeable pavements for both vehicular and pedestrian traffic be designed for no exfiltration of water into the subgrade soil. This requires installing a subdrain system at the base of the pervious aggregate materials, which are underlain by an impermeable liner. ICPI's generalized paver section for no exfiltration is presented Figure 5.

The soil subgrade beneath ICP pavements should be prepared and compacted in accordance with the recommendations presented in Section 7.1. In addition, the subgrade should be a firm and non-yielding surface. The subgrade should be proof-rolled under the observation of our field engineer to confirm it is non-yielding prior to placing the impermeable membrane and aggregate base materials. The native soil subgrade at the bottom of the permeable section should slope down toward the drain pipe trench at a gradient of at least two percent. The perforated pipe should slope down to a suitable outlet at a minimum gradient of one percent. The pipe should be placed with the perforations down on a minimum of two inches of permeable subbase.

ICPI's guidelines call for 1-1/2 to 2 inches of bedding material consisting of ASTM No. 8 aggregate directly below the pavers. This material is also recommended for fill material between the pavers. As shown in Table 6 below, this material consists of fine gravel with 10 to 30 percent sand.

TABLE 6
Gradation Requirements for ASTM No. 8 Aggregate

Sieve Size	Percentage Passing Sieve
1/2 inch	100
3/8 inch	85 – 100
No. 4	10 – 30
No. 8	0 – 10
No. 16	0 – 5

The ASTM No. 8 bedding should be underlain by a permeable base course of ASTM No. 57 crushed aggregate. As shown in Table 7, ASTM No. 57 aggregate consists of open-graded gravel with a gradation between that of the 3/4-inch drain rock and the ASTM No. 8 aggregate.

TABLE 7
Gradation Requirements for ASTM No. 57 Aggregate

Sieve Size	Percentage Passing Sieve
1-1/2 inch	100
1 inch	95 – 100
1/2 inch	25 – 60
No. 4	0 – 10
No. 8	0 – 5

The ASTM No. 57 permeable base course should be underlain by a permeable subbase course of ASTM No. 2 crushed aggregate. The gradation requirements for ASTM No. 2 crushed aggregate subbase are presented in Table 8.

TABLE 8
Gradation Requirements for ASTM No. 2 Aggregate

Sieve Size	Percentage Passing Sieve
3 inch	100
2-1/2 inch	90-100
2 inch	35-70
1-1/2 inch	0-15
3/4 inch	0 -5

The No. 2 aggregate subbase course should be placed in lifts not exceeding 6 inches in loose thickness and compacted using a smooth-drum roller, operated in static (non-vibratory) mode. The subsequent course of No. 57 aggregate may be placed in one lift and should be compacted with a smooth-drum roller in vibratory mode with sufficient passes to create an unyielding surface. Placement and compaction of the permeable aggregate base and subbase should be performed under the observation of our field engineer. Following compaction of the No. 57 aggregate, the No. 8 bedding, not exceeding 2 inches in loose thickness, should be placed and screeded to a level, undisturbed surface immediately prior to paver installation.

The required thicknesses of the permeable aggregate base and subbase courses depends on the infiltration and water storage design requirements, as well as the traffic loading demand. Based on design traffic indices of 6.0 and 7.0, as provided to us by the project civil engineer, our recommendations for the minimum permeable ICP pavement sections (based on traffic demand) are presented in Table 9. Also included in Table 9 is a recommended section for permeable ICPs subject to pedestrian traffic only.

TABLE 9
Recommended Pavement Sections for
Permeable Interlocking Concrete Pavers

TI	ASTM No. 8 Bedding Aggregate (inches)	ASTM No. 57 Stone Base (inches)	ASTM No. 2 Stone Subbase (inches)
Pedestrian	1.5-2.0	4.0	6.0
6.0	1.5-2.0	4.0	8.0
7.0	1.5-2.0	4.0	10.0

The above recommended ICP pavement sections are based on the ICPI technical guidelines (ICPI 2005). From a geotechnical standpoint, it is acceptable to design the pedestrian ICP section to exclude the No. 2 subbase course, in which case the No. 57 base course should be increased to 10 inches. From a geotechnical standpoint it is also acceptable to use compacted

structural planting mix in lieu of the No. 57 and No. 2 base courses in locations where the pedestrian ICP section is adjacent to tree wells and is required for promoting root growth. If either of these approaches are used, the perforated pipe should include a filter fabric sleeve to prevent the finer aggregate or organic material from entering the perforations.

7.3 Landscaping

As discussed in Section 6.1, care should be taken to minimize the potential for subsurface water to collect beneath non-permeable pavements and pedestrian walkways. Where landscape beds and tree wells are immediately adjacent to pavements and flatwork that are not designed as permeable systems, we recommend vertical cutoff barriers be incorporated into the design to prevent irrigation water from saturating the subgrade and AB. These barriers may consist of either flexible impermeable membranes or deepened concrete curbs.

Prior experience and industry literature indicate that some species of high water-demand[7] trees can induce ground-surface settlement by drawing water from the expansive clay, causing it to shrink. Where these types of trees are planted near buildings, the ground-surface settlement may result in damage to structure. This problem usually occurs 10 or more years after planting, as the trees reach mature height. To reduce the risk of tree-induced, building settlement, we recommend trees of the following genera are not planted within 25 feet of the proposed buildings: *Eucalyptus, Populus, Quercus, Crataegus, Salix, Sorbus* (simple-leafed), *Ulmus, Cupressus, Chamaecyparis,* and *Cupressocyparis.* Because this is a limited list and does not include all genera that may induce ground-surface settlement, a tree specialist should be consulted prior to selection of trees to be planted at the site.

7.4 Seismic Design

If any new structures are included in the proposed infrastructure improvements, they should be designed using the seismic provisions in the 2010 California Building Code (CBC). The latitude and longitude of the site are 37.8272^{o} and -122.2664^{o}, respectively. Although the 2010 CBC

calls for a Site Class F designation for sites underlain by potentially liquefiable soil, we conclude the thin, discontinuous liquefiable soil layers beneath the site will not incur significant nonlinear behavior during strong ground shaking. Therefore, for seismic design we recommend Site Class D be used.

For seismic design in accordance with the 2010 CBC, which references the 2005 ASCE 7 Standard, we recommend the following:

- S_{MS} = 1.654g, S_{M1} = 0.915g
- S_{DS} = 1.103g, S_{D1} = 0.610g.

The document titled 2009 NEHRP Recommended Seismic Provisions for New Buildings and Other Structures (FEMA P-750) presents modifications to the 2005 ASCE 7 Standard and includes hazard parameters from the 2008 USGS National Seismic Hazard Mapping Project. These provisions have been incorporated into the 2010 ASCE 7 Standard and are expected to be incorporated into future editions of the CBC. For seismic design in accordance with the 2009 NEHRP Provisions, we recommend the following:

- S_{MS} = 1.93g, S_{M1} = 1.17g
- S_{DS} = 1.29g, S_{D1} = 0.78g.

7.5 Soil Corrosivity

Corrosivity analyses were performed by Environmental Technical Services on a soil sample obtained from boring B-RR-3 at a depth of 2 feet during our field investigation for Parcel D. The results of the test and a more detailed discussion of the corrosivity characteristics are presented in Appendix A of this report. Corrosivity testing was also previously performed by CERCO Analytical on four samples of the soil obtained above a depth of 10 feet from the 2010 AMEC borings (parking structure site). The results of these tests are presented in Appendix B of this report. Based on the resistivity test results, the samples would be classified as moderately

---

[7] "Water-demand" refers to the ability of the tree to withdraw large amounts of water from the soil subgrade, rather than soil suction exerted by the root system.

corrosive to corrosive to buried steel. Accordingly, buried iron, steel, cast iron, galvanized steel, and dielectric-coated steel or iron should be properly protected against corrosion. The chloride and sulfate ion concentration and pH of the soil were determined to be insufficient to damage reinforced concrete.

8.0 GEOTECHNICAL ENGINEERING SERVICES DURING CONSTRUCTION

Prior to construction, Rockridge Geotechnical should review the project plans and specifications to verify that they conform to the intent of our recommendations. During construction, our field engineer should provide on-site observation and testing during site preparation, grading, and fill placement and compaction. These observations will allow us to compare actual with anticipated soil conditions and to check that the contractor's work conforms with the geotechnical aspects of the plans and specifications.

9.0 LIMITATIONS

This geotechnical study has been conducted in accordance with the standard of care commonly used as state-of-practice in the profession. No other warranties are either expressed or implied. The recommendations made in this report are based on the assumption that the subsurface soil and groundwater conditions do not deviate appreciably from those disclosed in the exploratory borings and CPTs. If any variations or undesirable conditions are encountered during construction, we should be notified so that additional recommendations can be made. The foundation recommendations presented in this report are developed exclusively for the proposed development described in this report and are not valid for other locations and construction in the project vicinity.

REFERENCES

AMEC Geomatirx (2010), "Geotechnical Evaluation – BART MacArthur Parking Structure, West MacArthur Boulevard at BART Station, Oakland, California," September 2010.

American Concrete Institute (2001), "Guide for design and Construction of Concrete Parking Lots," ACI 330R-01.

Bartlett, S.F. and Youd, T.L. (1995), "Empirical Prediction of Liquefaction-Induced Lateral Spread", Journal of Geotechnical Engineering, Vol. 121, No. 4, April 1995, p. 316-329.

California Division of Mines and Geology (1966), Probabilistic seismic hazard assessment for the State of California, DMG Open-File Report 96-08.

California Geological Survey (2003), Seismic Hazard Zone Report for the Oakland West 7.5-Minute Quadrangle, Alameda County, California, Seismic Hazard Zone Report 081.

California Geological Survey (2008), Guidelines for Evaluating and Mitigating Seismic Hazards in California, Special Publication 117.

Cao, T., Bryant, W. A., Rowshandel, B., Branum D. and Wills, C. J. (2003). "The Revised 2002 California Probabilistic Seismic Hazard Maps".

Idriss, I.M. and Boulanger, R.W. (2008), "Soil Liquefaction During Earthquakes", Earthquake Engineering Institute Monograph MNO-12.

Interlocking Concrete Pavement Institute (2005), "Permeable Interlocking Concrete Pavments, Selection-Design-Construction-Maintenance," Third Edition.

Ishihara, K. (1985), "Stability of Natural Deposits during Earthquakes", Proceedings, 11th International Conference on Soil Mechanics and Foundation Engineering.

National Center for Earthquake Engineering Research (NCEER) (1997). *Proceedings of the NCEER Workshop on Evaluation of Liquefaction Resistance of Soils*. Technical Report NCEER-97-002.

Rockridge Geotechnical (2011), "Supplemental Geotechnical Investigation – MacArthur Transit Village Parking Structure, MacArthur BART Station, Oakland, California."

Rockridge Geotechnical (2011), "Geotechnical Investigation – MacArthur Transit Village – Block D, MacArthur BART Station, Oakland, California."

Tokimatsu, K. and Seed, H.B. (1984), "Simplified Procedures for the Evaluation of Settlement in Clean Sands", Report No. UCB/GT-84/16, Earthquake Engineering Research Center, University of California, Berkeley, 1984.

Toppozada, T.R. and Borchardt G. (1998), "Re-evaluation of the 1936 "Hayward Fault" and the 1838 San Andreas Fault Earthquakes." Bulletin of Seismological Society of America, 88(1), 140-159.

U.S. Geological Survey, (2008), The Uniform California Earthquake Rupture Forecast, Version 2 (UCERF 2): prepared by the 2007 Working Group on California Earthquake Probabilities, U.S. Geological Survey Open File Report 2007-1437.

FIGURES

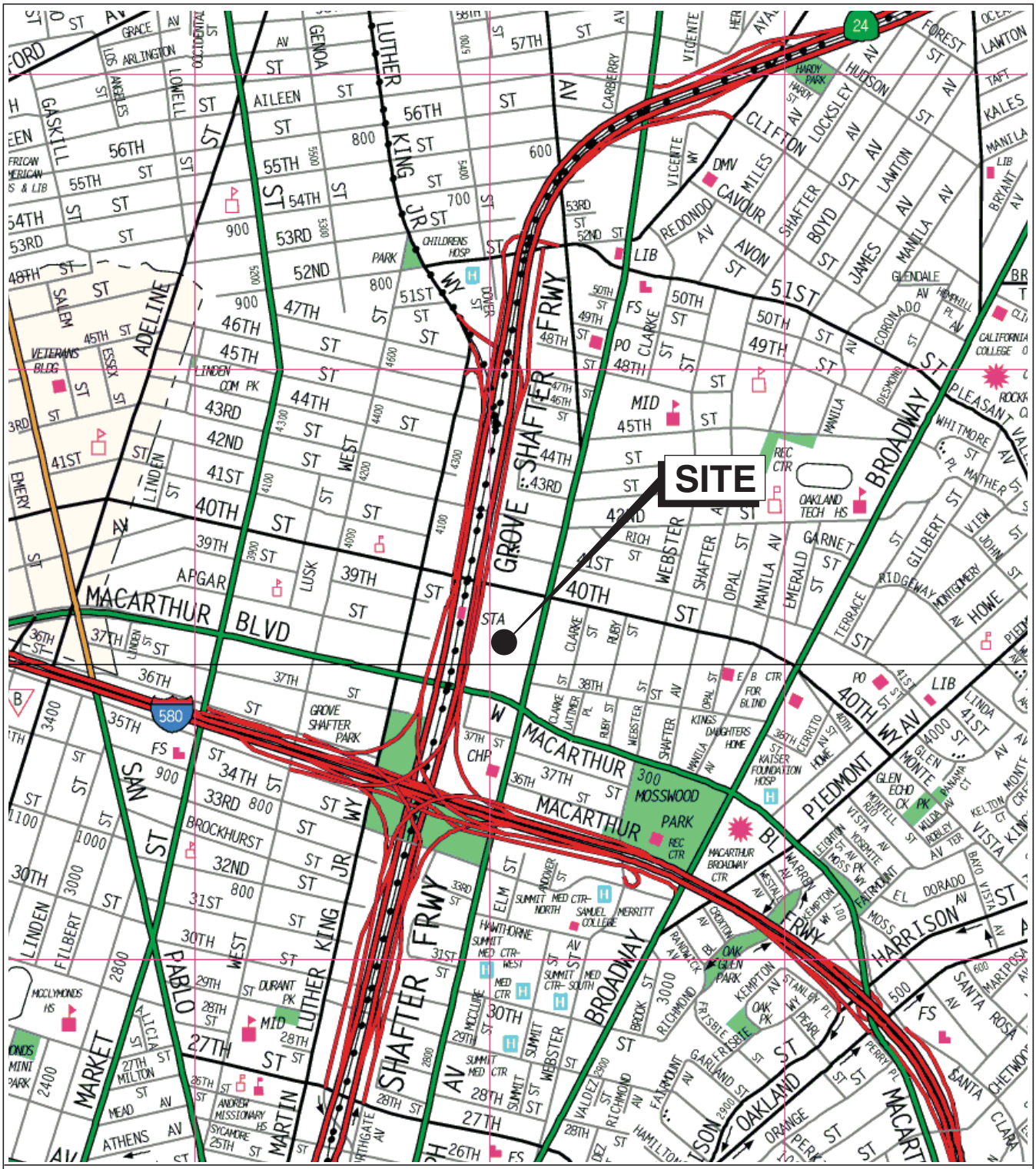

Base map: The Thomas Guide
Alameda County
1999

0 1/4 1/2 Mile

Approximate scale

MACARTHUR TRANSIT VILLAGE INFRASTRUCTURE
Oakland, California

ROCKRIDGE GEOTECHNICAL

SITE LOCATION MAP

Date 05/16/11	Project No. 11-317	Figure 1

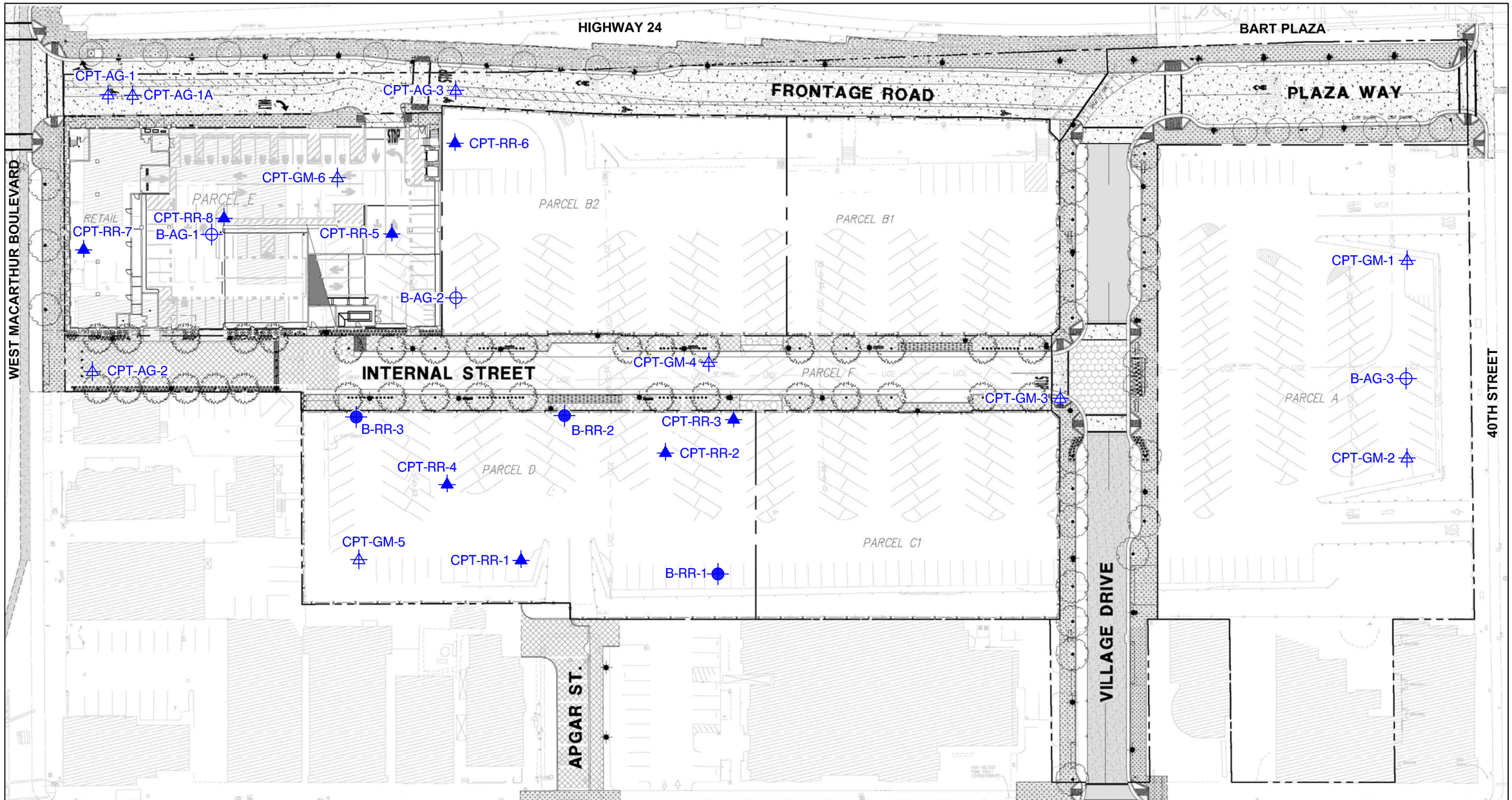

EXPLANATION

B-RR-1	Approximate location of boring performed by Rockridge Geotechnical, March 2011
CPT-RR-1	Approximate location of cone penetration test performed by Rockridge Geotechnical, March 2011
B-AG-1	Approximate location of boring performed by Amec Geomatrix, May 2010
CPT-AG-1	Approximate location of cone penetration test performed by Amec Geomatrix, May 2010
CPT-GM-1	Approximate location of cone penetration test by Geomatrix, October 2004

Reference: Base map from a drawing titled "Key Map, MacArthur Transit Village Site Development, Sheet C0.10" by SANDIS Civil Engineers, dated 04/29/11.

0 60 Feet
Approximate scale

MACARTHUR TRANSIT VILLAGE INFRASTRUCTURE
Oakland, California

SITE PLAN

Date 05/19/11	Project No. 11-317	Figure 2

ROCKRIDGE GEOTECHNICAL

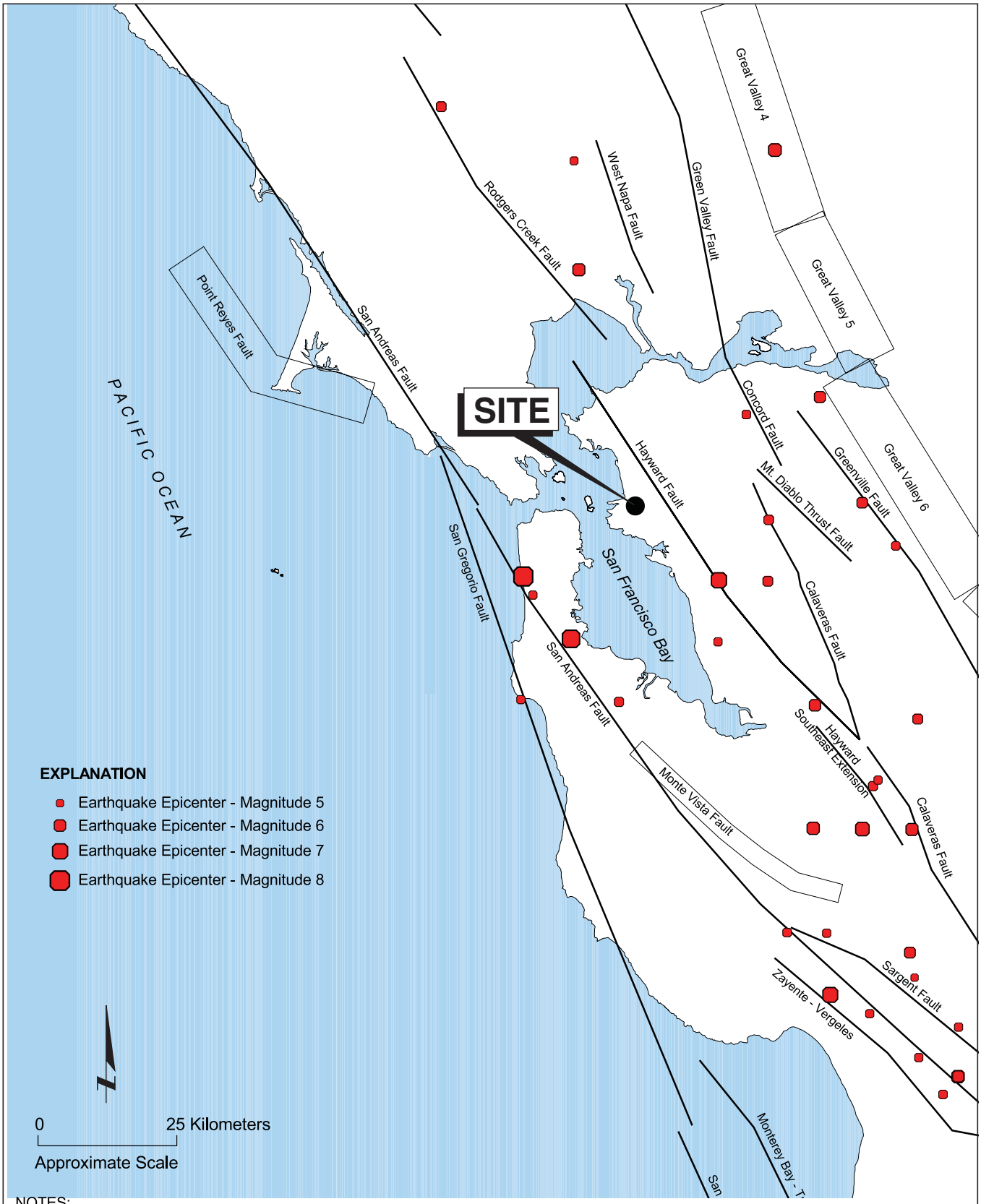

NOTES:
Digitized data for fault coordinates and earthquake catalog was developed by the California Department of Conservation Division of Mines and Geology. The historic earthquake catalog includes events from January 1800 to December 2000.

MACARTHUR TRANSIT VILLAGE INFRASTRUCTURE
Oakland, California

ROCKRIDGE GEOTECHNICAL

MAP OF MAJOR FAULTS AND EARTHQUAKE EPICENTERS IN THE SAN FRANCISCO BAY AREA

Date 05/16/11	Project No. 11-317	Figure 3

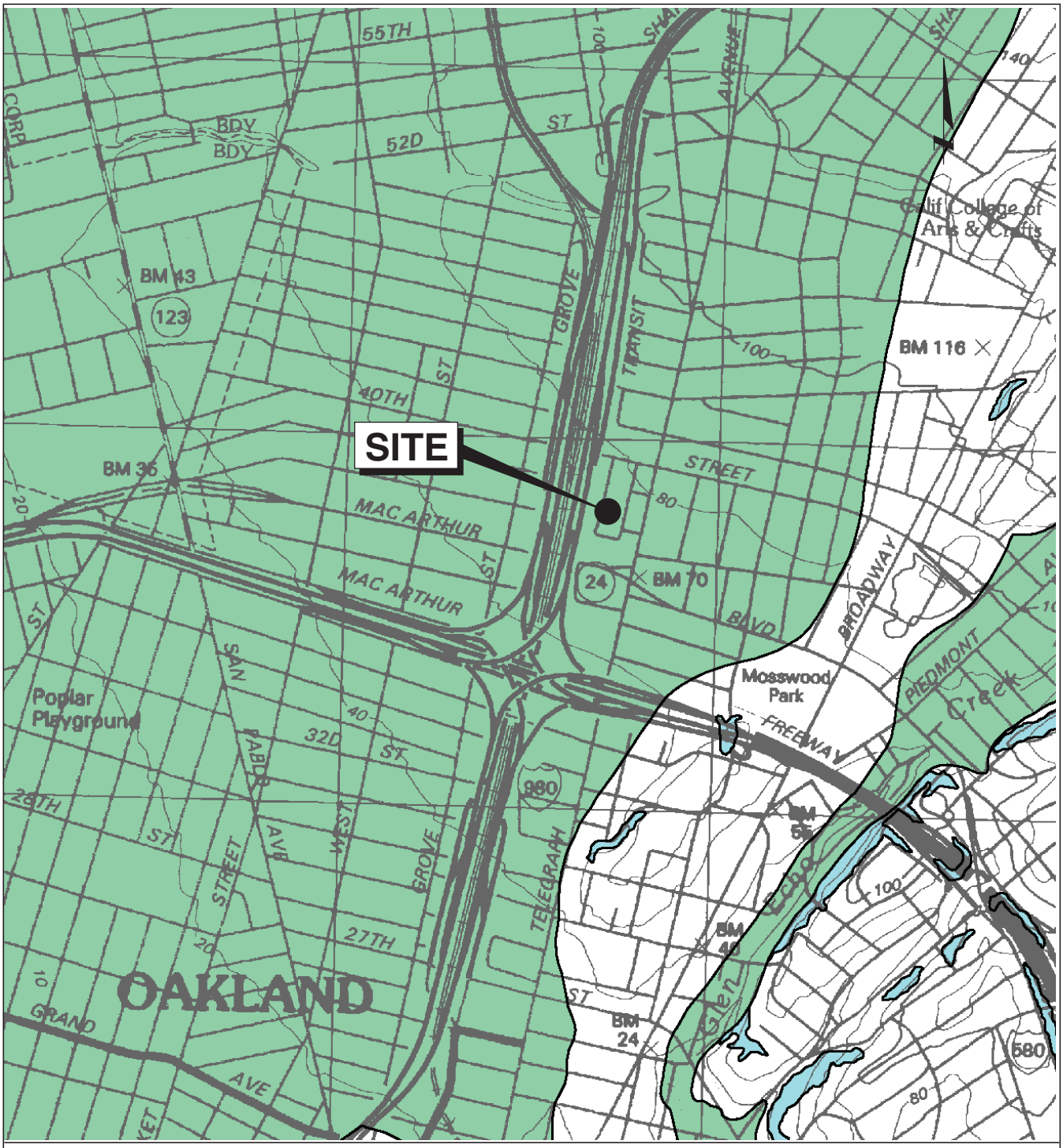

EXPLANATION

Liquefaction; Areas where historic occurence of liquefaction, or local topographic, geological, geotechnical, and subsurface water conditions indicate a potential for permanent ground displacements.

Earthquake-Induced Landslides; Areas where previous occurence of landslide movement, or local topographic, geological, geotechnical, and subsurface water conditions indicate a potential for permanent ground displacements.

0 1,000 2,000 Feet

Approximate scale

Reference:
State of California "Seismic Hazard Zones"
Oakland West Quadrangle.
Released on February 14, 2003

MACARTHUR TRANSIT VILLAGE INFRASTRUCTURE
Oakland, California

ROCKRIDGE GEOTECHNICAL

SEISMIC HAZARDS ZONE MAP

Date 05/16/11	Project No. 11-317	Figure 4

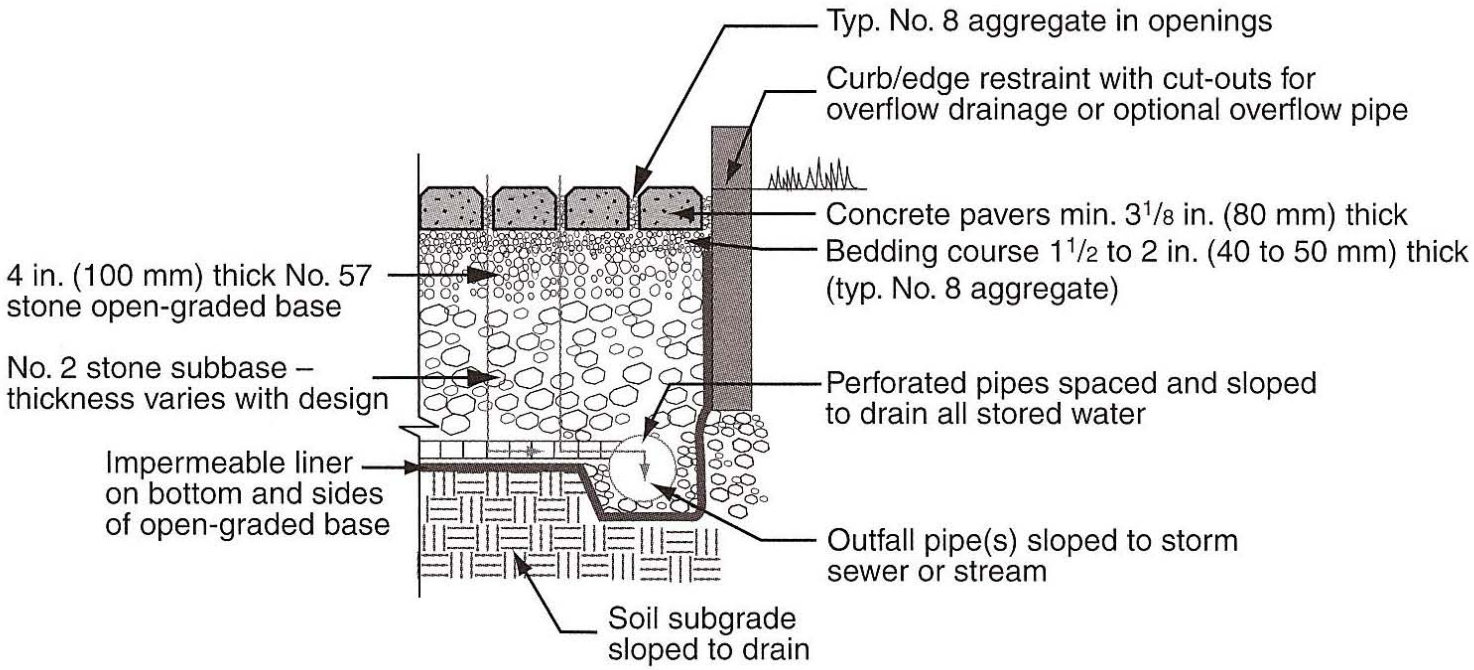

Reference: "Permeable Interlocking Concrete Pavements", Third Edition, prepared by Interlocking Concrete Pavement Institute, dated 2005.

MACARTHUR TRANSIT VILLAGE INFRASTRUCTURE
Oakland, California

GENERALIZED ICPI PERMEABLE PAVER DETAIL

Date 05/19/11	Project No. 11-317	Figure 5

ROCKRIDGE GEOTECHNICAL

ROCKRIDGE GEOTECHNICAL

APPENDIX A

Logs of Borings, Cone Penetration Test Results, and Laboratory Test Results By Rockridge Geotechnical

PROJECT: **MACARTHUR TRANSIT VILLAGE**
BLOCK D
Oakland, California

Log of Boring B-RR-1

Boring location: See Site Plan, Figure 2
Logged by: L. Medeiros
Date started: 3/5/11 | Date finished: 3/5/11
Drilling method: Hollow-Stem Auger
Hammer weight/drop: 140 lbs./30 inches | Hammer type: Automatic Hammer
Sampler: Sprague & Henwood (S&H), Standard Penetration Test (SPT), Shelby Tube (ST)

DEPTH (feet)	SAMPLES: Sampler Type	Sample	Blows/ 6"	SPT N-Value[1]	LITHOLOGY	MATERIAL DESCRIPTION (Approximate Ground Surface Elevation: 65.3 feet[2])	LABORATORY TEST DATA: Type of Strength Test	Confining Pressure Lbs/Sq Ft	Shear Strength Lbs/Sq Ft	Fines %	Natural Moisture Content, %	Dry Density Lbs/Cu Ft
						2.5-inch Asphalt Concrete (AC)						
						8-inch Aggregate Base (AB)						
1–2	S&H	■	6 8 11	14	CL	CLAY with SAND (CL) blue-gray, stiff to very stiff, moist, slight hydro-carbon odor	PP		3,800		20.4	95
3–4	S&H	■	4 9 11	15	CL	blue-gray with spots of yellow-brown, occasional rounded gravel, hydro-carbon odor						
5–6	S&H	■	6 6 8	11	CL	SANDY CLAY (CL) yellow-brown mottled with blue-gray, stiff, wet, with clayey sand lenses					29.0	89
7						▽ (03/05/11; 9:28 AM)						
8–9					CL	CLAY (CL) olive-gray, medium stiff, wet; LL = 37, PI = 20; see Appendix B						
10–11	S&H	■	2 3 5	6	CL						27.4	93
12–14					CL							
15	ST	■			CL	Consolidation Test, see Appendix B					25.6	97
16–17					CL	SANDY CLAY with GRAVEL (CL) brown with gray mottling, medium stiff to stiff, wet						
18–19					GP-GC	GRAVEL with CLAY and SAND (GP-GC) olive-brown, medium dense, wet						
20												

ROCKRIDGE GEOTECHNICAL

Project No.: 10-272 | Figure: A-1a

PROJECT: **MACARTHUR TRANSIT VILLAGE**
BLOCK D
Oakland, California

Log of Boring B-RR-1

DEPTH (feet)	SAMPLES: Sampler Type	SAMPLES: Sample	SAMPLES: Blows/ 6"	SAMPLES: SPT N-Value[1]	LITHOLOGY	MATERIAL DESCRIPTION	LABORATORY TEST DATA: Type of Strength Test	Confining Pressure Lbs/Sq Ft	Shear Strength Lbs/Sq Ft	Fines %	Natural Moisture Content, %	Dry Density Lbs/Cu Ft
21	S&H		13 17 19	27	GP-GC	GRAVEL with CLAY and SAND (GP-GC) (continued)				10		
22												
23					SC	CLAYEY SAND (SC) yellow-brown, medium dense, wet						
24												
25	SPT		6 6 5	13						28		
26												
27												
28					ML	SANDY SILT (ML) red-brown, stiff, wet, very fine sand						
29												
30												
31	ST						PP		1,800			
32												
33												
34												
35												
36												
37												
38												
39												
40												

Boring terminated at a depth of 32 feet below ground surface.
Boring backfilled with cement grout.
Groundwater encountered at a depth of 7 feet during drilling.

[1] S&H and SPT blow counts for the last two increments were converted to SPT N-Values using factors of 0.75 and 1.2, respectively to account for sampler type and hammer energy.
[2] Elevations based on Vesting Tentative Map, Sheet T-4, by Sandis Engineers, dated 6/30/10.

ROCKRIDGE GEOTECHNICAL

Project No.: 10-272

Figure: A-1b

PROJECT: **MACARTHUR TRANSIT VILLAGE**
BLOCK D
Oakland, California

Log of Boring B-RR-2

Boring location: See Site Plan, Figure 2
Logged by: L. Medeiros
Date started: 3/5/11 | Date finished: 3/5/11
Drilling method: Hollow-Stem Auger
Hammer weight/drop: 140 lbs./30 inches | Hammer type: Automatic Hammer
Sampler: Sprague & Henwood (S&H), Standard Penetration Test (SPT), Shelby Tube (ST)

DEPTH (feet)	SAMPLES: Sampler Type	Sample	Blows/ 6"	SPT N-Value[1]	LITHOLOGY	MATERIAL DESCRIPTION	LABORATORY TEST DATA: Type of Strength Test	Confining Pressure Lbs/Sq Ft	Shear Strength Lbs/Sq Ft	Fines %	Natural Moisture Content, %	Dry Density Lbs/Cu Ft
						Approximate Ground Surface Elevation: 64.8 feet[2]						
						4-inch Asphalt Concrete (AC)						
						6-inch Aggregate Base (AB)						
1	S&H		8 5 9	11	CL	CLAY (CL) yellow-brown mottled with gray, stiff, moist						
2												
3	S&H		2 5 12	13		blue-gray with yellow-brown spots, with lenses of silty sand, slight hydro-carbon odor					26.4	86
4												
5	S&H		5 10 13	17	CL	SANDY CLAY (CL) blue-gray, very stiff, wet, strong hydro-carbon odor						
6												
7												
8						CLAY with SAND (CL) olive mottled with gray, medium stiff to stiff, wet, slight hydro-carbon odor						
9												
10					CL						25.0	99
11	ST					Consolidation Test, see Appendix B	TxUU	700	1,100		22.7	104
12												
13						▽ (03/05/11; 7:51 AM)						
14						CLAYEY SAND with GRAVEL (SC) dark olive-gray, dense, wet, gravel up to 1.5 inches in dimension						
15	S&H		11 20 24	33						14	17.6	112
16					SC							
17												
18												
19												
20												

ROCKRIDGE GEOTECHNICAL

Project No.: 10-272 | Figure: A-2a

PROJECT: **MACARTHUR TRANSIT VILLAGE**
BLOCK D
Oakland, California

Log of Boring B-RR-2

DEPTH (feet)	SAMPLES: Sampler Type	SAMPLES: Sample	SAMPLES: Blows/ 6"	SAMPLES: SPT N-Value[1]	LITHOLOGY	MATERIAL DESCRIPTION	LABORATORY TEST DATA: Type of Strength Test	Confining Pressure Lbs/Sq Ft	Shear Strength Lbs/Sq Ft	Fines %	Natural Moisture Content, %	Dry Density Lbs/Cu Ft
21	SPT		15 16 17	40	SC	CLAYEY SAND with GRAVEL (SC) (continued) brown						
22												
23						SANDY CLAY (CL) red-brown, stiff, wet, fine sand						
24					CL							
25												
26	S&H		8 8 8	12			PP		800			
27						CLAY (CL) gray, medium stiff to stiff, wet, with trace organics						
28												
29					CL							
30												
31	ST					Consolidation Test, see Appendix B	PP		1,000		26.4	94
32												
33												
34												
35												
36												
37												
38												
39												
40												

Boring terminated at a depth of 32 feet below ground surface.
Boring backfilled with cement grout.
Groundwater encountered at a depth of 13 feet during drilling.

[1] S&H and SPT blow counts for the last two increments were converted to SPT N-Values using factors of 0.75 and 1.2, respectively to account for sampler type and hammer energy.
[2] Elevations based on Vesting Tentative Map, Sheet T-4, by Sandis Engineers, dated 6/30/10.

ROCKRIDGE GEOTECHNICAL

Project No.: 10-272
Figure: A-2b

PROJECT:	MACARTHUR TRANSIT VILLAGE BLOCK D Oakland, California	**Log of Boring B-RR-3** PAGE 1 OF 2

Boring location:	See Site Plan, Figure 2		Logged by: L. Medeiros
Date started:	3/5/11	Date finished: 3/5/11	
Drilling method:	Hollow-Stem Auger		
Hammer weight/drop:	140 lbs./30 inches	Hammer type: Automatic Hammer	
Sampler:	Sprague & Henwood (S&H), Standard Penetration Test (SPT), Shelby Tube (ST)		

DEPTH (feet)	SAMPLES: Sampler Type	SAMPLES: Sample	SAMPLES: Blows/ 6"	SAMPLES: SPT N-Value[1]	LITHOLOGY	MATERIAL DESCRIPTION Approximate Ground Surface Elevation: 65.5 feet[2]	LABORATORY TEST DATA: Type of Strength Test	Confining Pressure Lbs/Sq Ft	Shear Strength Lbs/Sq Ft	Fines %	Natural Moisture Content, %	Dry Density Lbs/Cu Ft
						2.5-inch Asphalt Concrete (AC) 10-inch Aggregate Base (AB)						
1						SANDY CLAY with GRAVEL (CL) gray mottled with yellow-brown, stiff, moist						
2	S&H	■	18 8 9	13								
3												
4	S&H	■	5 6 10	12	CL	olive mottled with blue-gray, with clayey sand lenses, slight hydro-carbon odor LL = 42, PI = 25; see Appendix B					27.6	84
5												
6	S&H	■	3 6 8	11		occasional gravel, slight hydro-carbon odor						
7						∇ (03/05/11; 11:50 AM)						
8						CLAY (CL) olive mottled with gray, stiff, moist						
9												
10												
11	S&H	■	5 7 10	13	CL		PP		1,500		25.0	100
12												
13						CLAYEY SAND (SC) brown, loose, wet, high clay fraction						
14												
15					SC							
16	S&H	■	0 3 4	5						39		
17						CLAYEY GRAVEL with SAND (GC) brown, medium dense, wet						
18					GC							
19												
20												

ROCKRIDGE GEOTECHNICAL

Project No.:	Figure:
10-272	A-3a

PROJECT: **MACARTHUR TRANSIT VILLAGE**
BLOCK D
Oakland, California

Log of Boring B-RR-3

DEPTH (feet)	SAMPLES: Sampler Type	SAMPLES: Sample	SAMPLES: Blows/ 6"	SAMPLES: SPT N-Value[1]	LITHOLOGY	MATERIAL DESCRIPTION	LABORATORY TEST DATA: Type of Strength Test	Confining Pressure Lbs/Sq Ft	Shear Strength Lbs/Sq Ft	Fines %	Natural Moisture Content, %	Dry Density Lbs/Cu Ft
21	S&H		20 30 33	47	GC	CLAYEY GRAVEL with SAND (GC) (continued) red-brown, dense to very dense						
22												
23						SANDY CLAY gray mottled with olive, stiff, wet, with occasional gravel						
24												
25												
26	ST						PP		1,800			
27												
28												
29												
30			7 10 11	16		yellow-brown, very stiff						
31	S&H											
32												
33												
34												
35												
36												
37												
38												
39												
40												

Boring terminated at a depth of 31.5 feet below ground surface.
Boring backfilled with cement grout.
Groundwater encountered at a depth of 7 feet during drilling.

[1] S&H and SPT blow counts for the last two increments were converted to SPT N-Values using factors of 0.75 and 1.2, respectively to account for sampler type and hammer energy.
[2] Elevations based on Vesting Tentative Map, Sheet T-4, by Sandis Engineers, dated 6/30/10.

ROCKRIDGE GEOTECHNICAL

Project No.: 10-272

Figure: A-3b

UNIFIED SOIL CLASSIFICATION SYSTEM

Major Divisions		Symbols	Typical Names
Coarse-Grained Soils (more than half of soil > no. 200 sieve size	**Gravels** (More than half of coarse fraction > no. 4 sieve size)	**GW**	Well-graded gravels or gravel-sand mixtures, little or no fines
		GP	Poorly-graded gravels or gravel-sand mixtures, little or no fines
		GM	Silty gravels, gravel-sand-silt mixtures
		GC	Clayey gravels, gravel-sand-clay mixtures
	Sands (More than half of coarse fraction < no. 4 sieve size)	**SW**	Well-graded sands or gravelly sands, little or no fines
		SP	Poorly-graded sands or gravelly sands, little or no fines
		SM	Silty sands, sand-silt mixtures
		SC	Clayey sands, sand-clay mixtures
Fine -Grained Soils (more than half of soil < no. 200 sieve size)	**Silts and Clays** LL = < 50	**ML**	Inorganic silts and clayey silts of low plasticity, sandy silts, gravelly silts
		CL	Inorganic clays of low to medium plasticity, gravelly clays, sandy clays, lean clays
		OL	Organic silts and organic silt-clays of low plasticity
	Silts and Clays LL = > 50	**MH**	Inorganic silts of high plasticity
		CH	Inorganic clays of high plasticity, fat clays
		OH	Organic silts and clays of high plasticity
Highly Organic Soils		**PT**	Peat and other highly organic soils

GRAIN SIZE CHART

Classification	Range of Grain Sizes	
	U.S. Standard Sieve Size	Grain Size in Millimeters
Boulders	Above 12"	Above 305
Cobbles	12" to 3"	305 to 76.2
Gravel	3" to No. 4	76.2 to 4.76
coarse	3" to 3/4"	76.2 to 19.1
fine	3/4" to No. 4	19.1 to 4.76
Sand	No. 4 to No. 200	4.76 to 0.075
coarse	No. 4 to No. 10	4.76 to 2.00
medium	No. 10 to No. 40	2.00 to 0.420
fine	No. 40 to No. 200	0.420 to 0.075
Silt and Clay	Below No. 200	Below 0.075

Unstabilized groundwater level

Stabilized groundwater level

SAMPLE DESIGNATIONS/SYMBOLS

Sample taken with Sprague & Henwood split-barrel sampler with a 3.0-inch outside diameter and a 2.43-inch inside diameter. Darkened area indicates soil recovered

Classification sample taken with Standard Penetration Test sampler

Undisturbed sample taken with thin-walled tube

Disturbed sample

Sampling attempted with no recovery

Core sample

Analytical laboratory sample

Sample taken with Direct Push sampler

Sonic

SAMPLER TYPE

C Core barrel

CA California split-barrel sampler with 2.5-inch outside diameter and a 1.93-inch inside diameter

D&M Dames & Moore piston sampler using 2.5-inch outside diameter, thin-walled tube

O Osterberg piston sampler using 3.0-inch outside diameter, thin-walled Shelby tube

PT Pitcher tube sampler using 3.0-inch outside diameter, thin-walled Shelby tube

S&H Sprague & Henwood split-barrel sampler with a 3.0-inch outside diameter and a 2.43-inch inside diameter

SPT Standard Penetration Test (SPT) split-barrel sampler with a 2.0-inch outside diameter and a 1.5-inch inside diameter

ST Shelby Tube (3.0-inch outside diameter, thin-walled tube) advanced with hydraulic pressure

MACARTHUR TRANSIT VILLAGE
BLOCK D
Oakland, California

ROCKRIDGE GEOTECHNICAL

CLASSIFICATION CHART

Date 03/09/11 | Project No. 10-272 | Figure A-4

ROCKRIDGE GEOTECHNICAL

Site: MACARTHUR BART
Sounding: CPT-RR-1

Engineer: L.MEDEIROS
Date: 3/5/2011 10:02

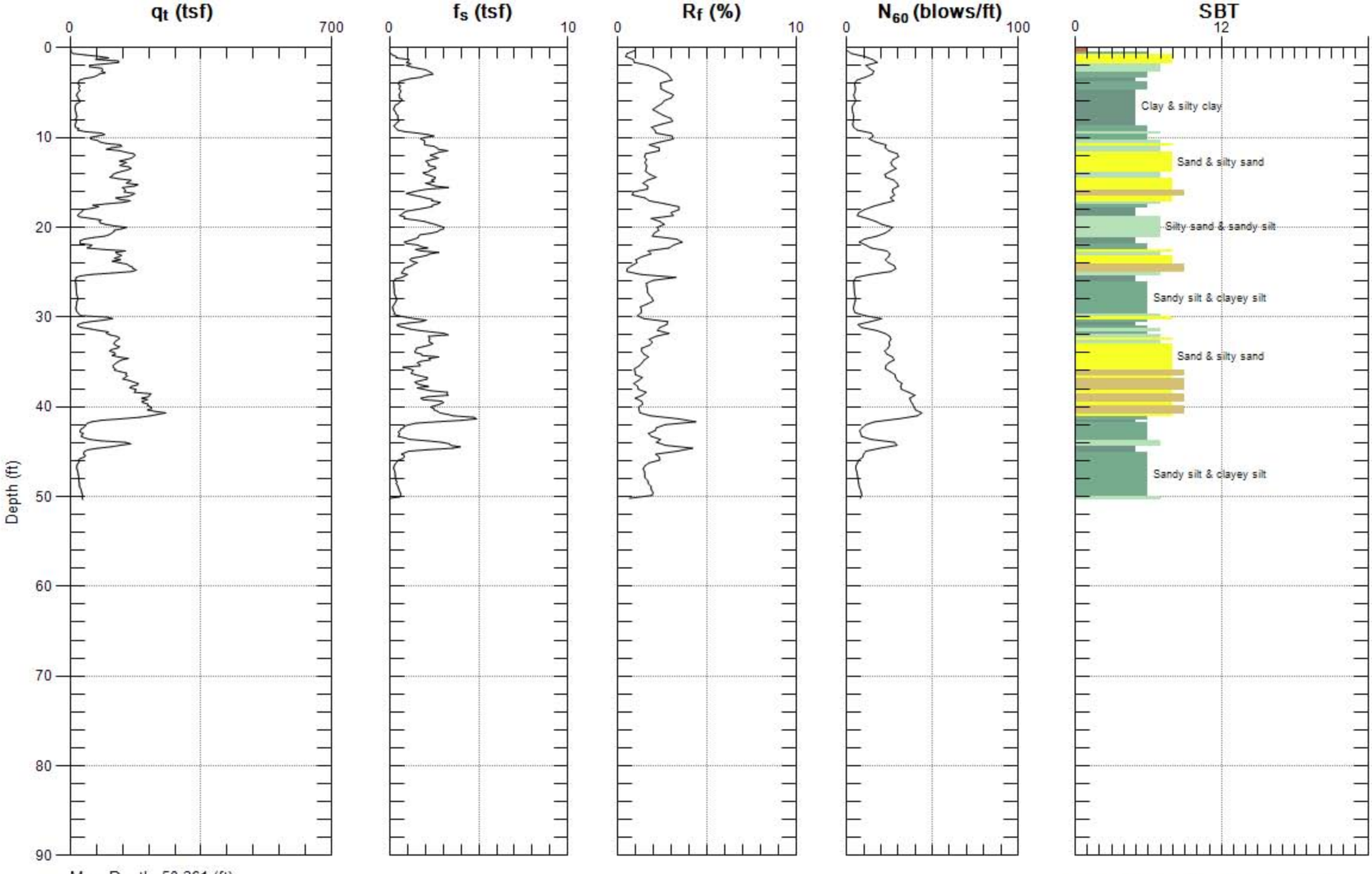

Max. Depth: 50.361 (ft)
Avg. Interval: 0.328 (ft)

SBT: Soil Behavior Type (Robertson 1990)

ROCKRIDGE GEOTECHNICAL

Site: MACARTHUR BART
Sounding: CPT-RR-2

Engineer: L.MEDEIROS
Date: 3/5/2011 08:36

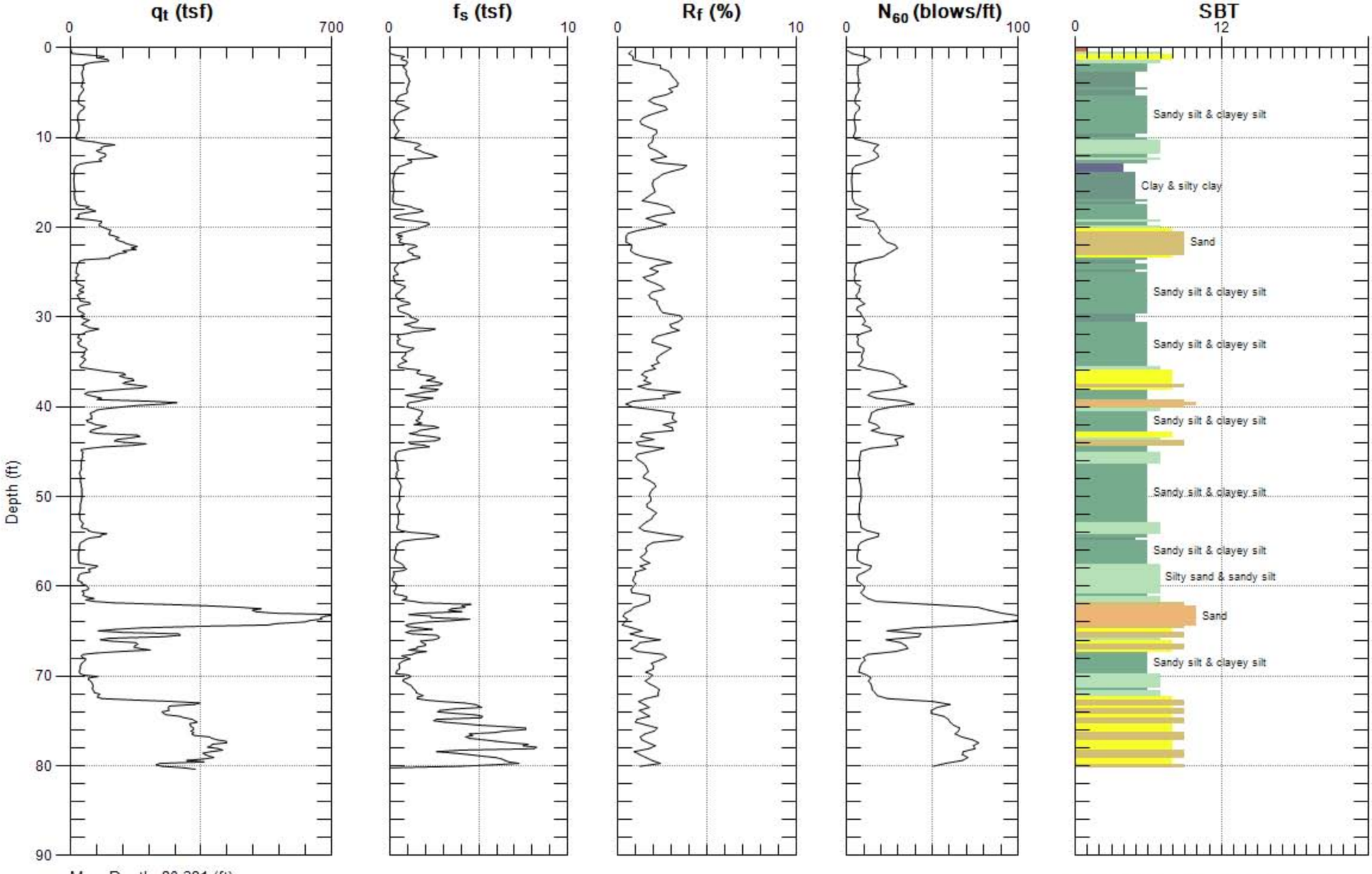

Max. Depth: 80.381 (ft)
Avg. Interval: 0.328 (ft)

SBT: Soil Behavior Type (Robertson 1990)

ROCKRIDGE GEOTECHNICAL

Site: MACARTHUR BART
Sounding: CPT-RR-3

Engineer: L.MEDEIROS
Date: 3/5/2011 07:18

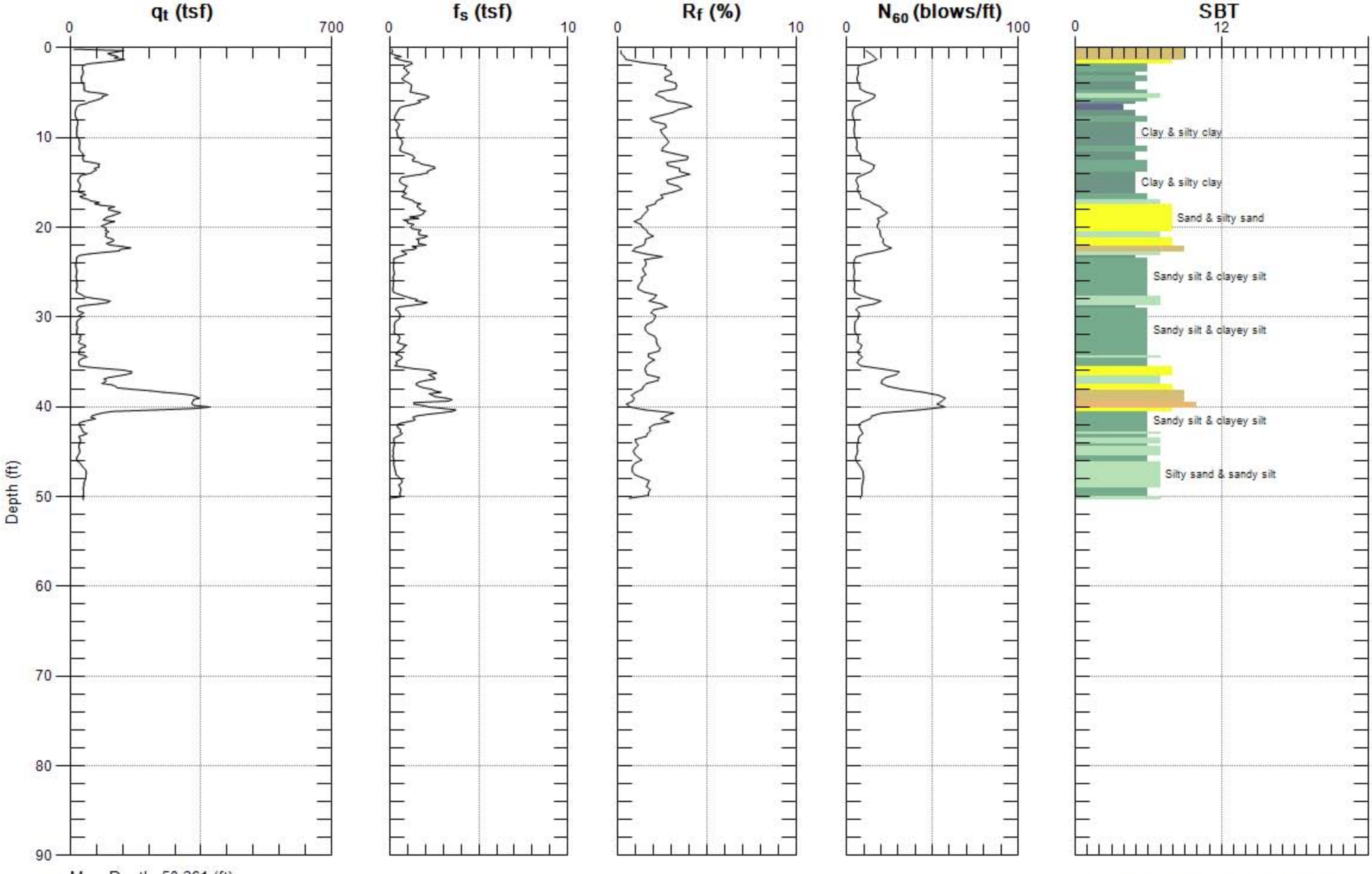

Max. Depth: 50.361 (ft)
Avg. Interval: 0.328 (ft)

SBT: Soil Behavior Type (Robertson 1990)

ROCKRIDGE GEOTECHNICAL

Site: MACARTHUR BART
Sounding: CPT-RR-4

Engineer: L.MEDEIROS
Date: 3/5/2011 10:54

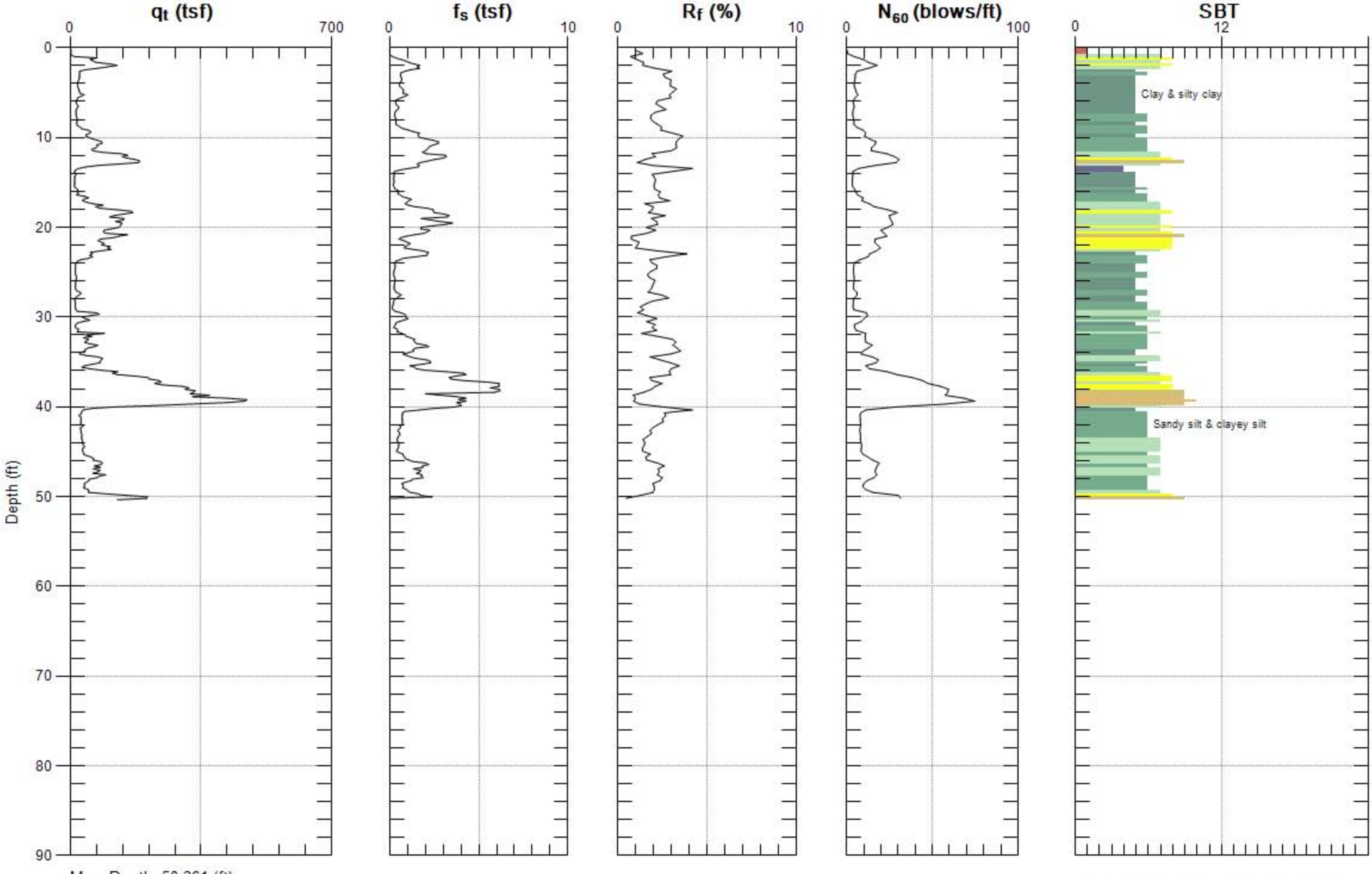

Max. Depth: 50.361 (ft)
Avg. Interval: 0.328 (ft)

SBT: Soil Behavior Type (Robertson 1990)

ROCKRIDGE GEOTECHNICAL

Site: MACARTHUR BART
Sounding: CPT-RR-5

Engineer: L.MEDEIROS
Date: 3/5/2011 12:08

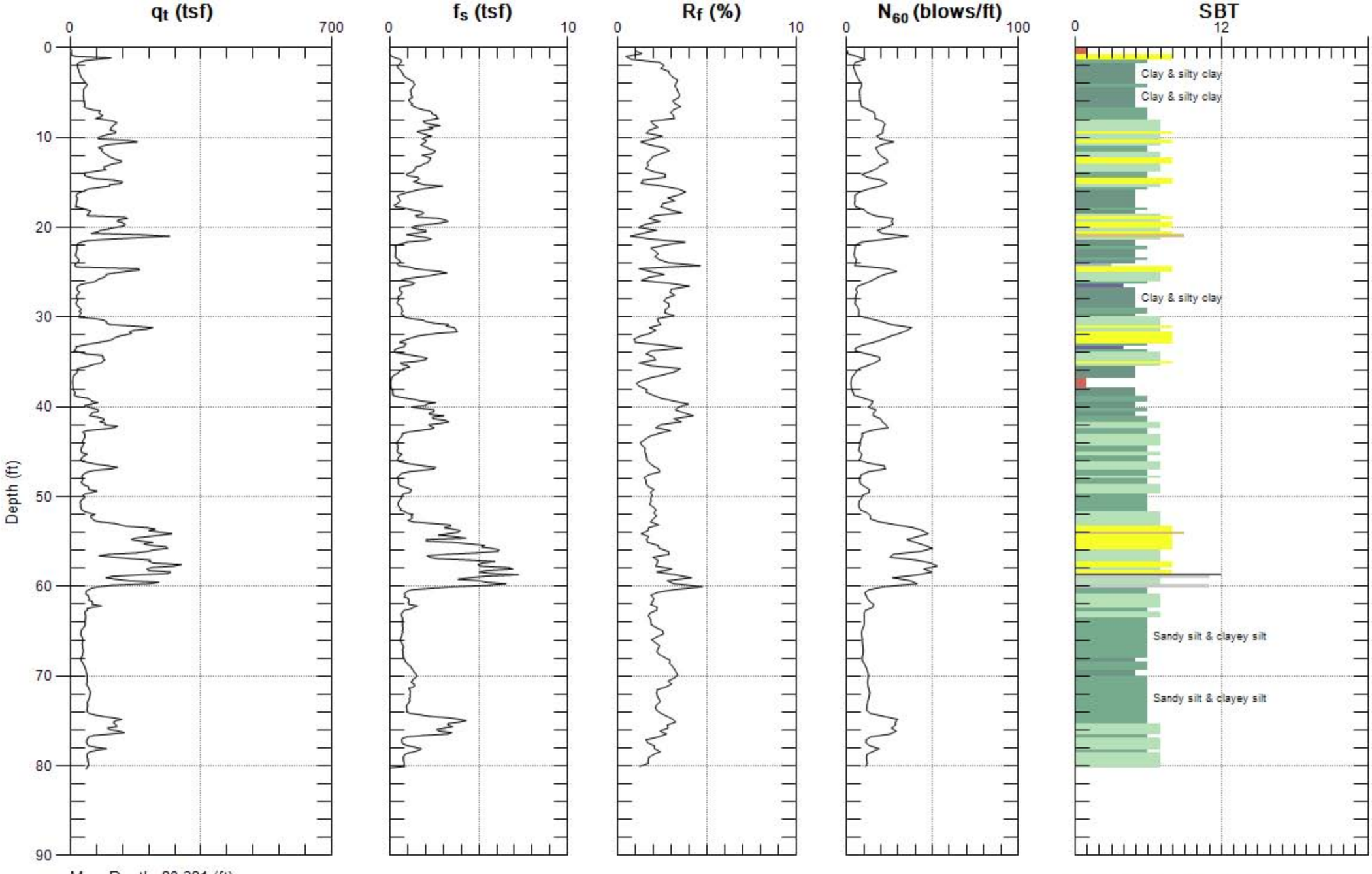

Max. Depth: 80.381 (ft)
Avg. Interval: 0.328 (ft)

SBT: Soil Behavior Type (Robertson 1990)

ROCKRIDGE GEOTECHNICAL

Site: MACARTHUR BART
Sounding: CPT-RR-6

Engineer: L.MEDEIROS
Date: 3/5/2011 01:27

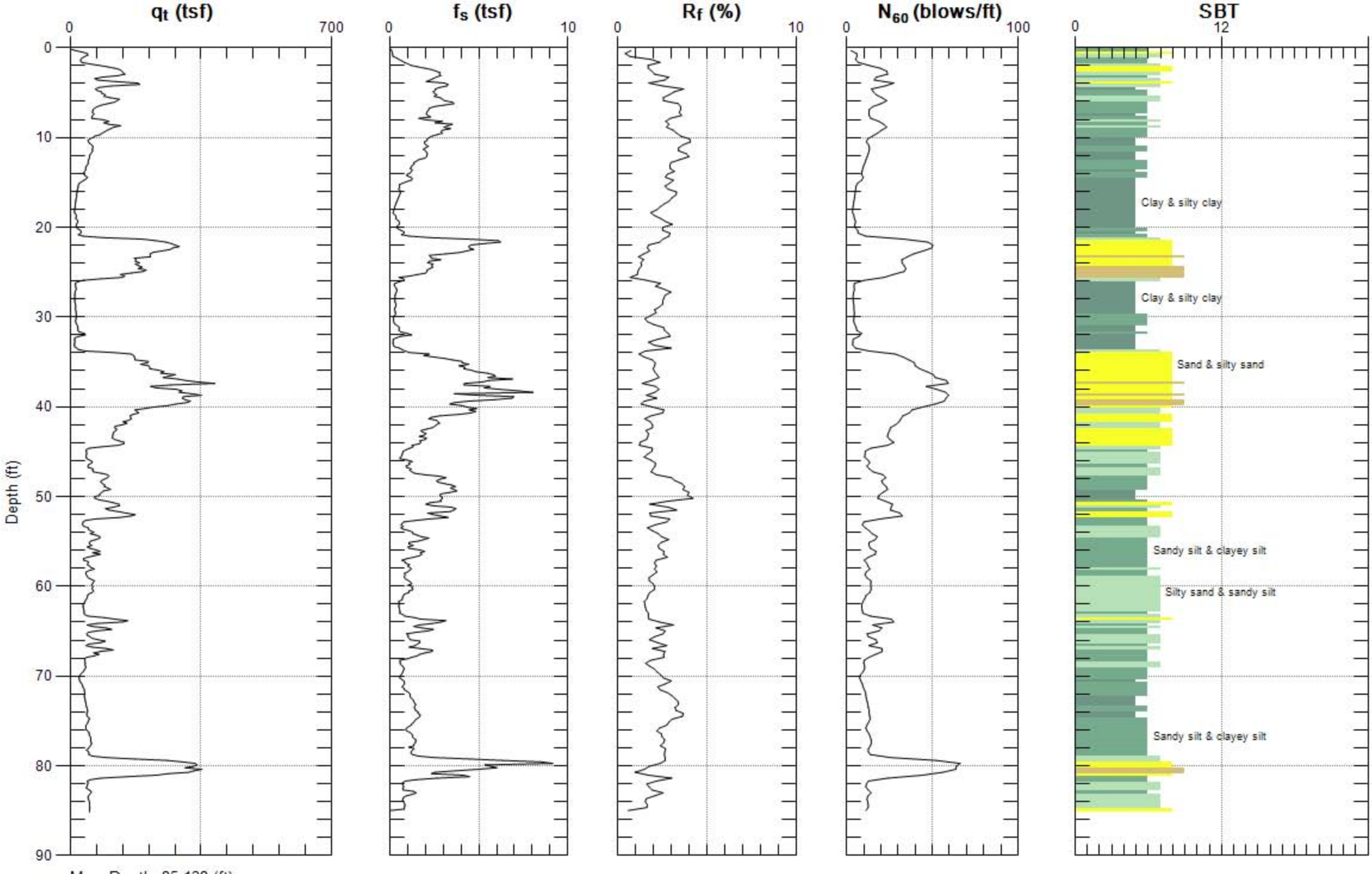

Max. Depth: 85.138 (ft)
Avg. Interval: 0.328 (ft)

SBT: Soil Behavior Type (Robertson 1990)

ROCKRIDGE GEOTECHNICAL

Site: MACARTHUR BART
Sounding: CPT-RR-7

Engineer: L.MEDEIROS
Date: 3/5/2011 02:57

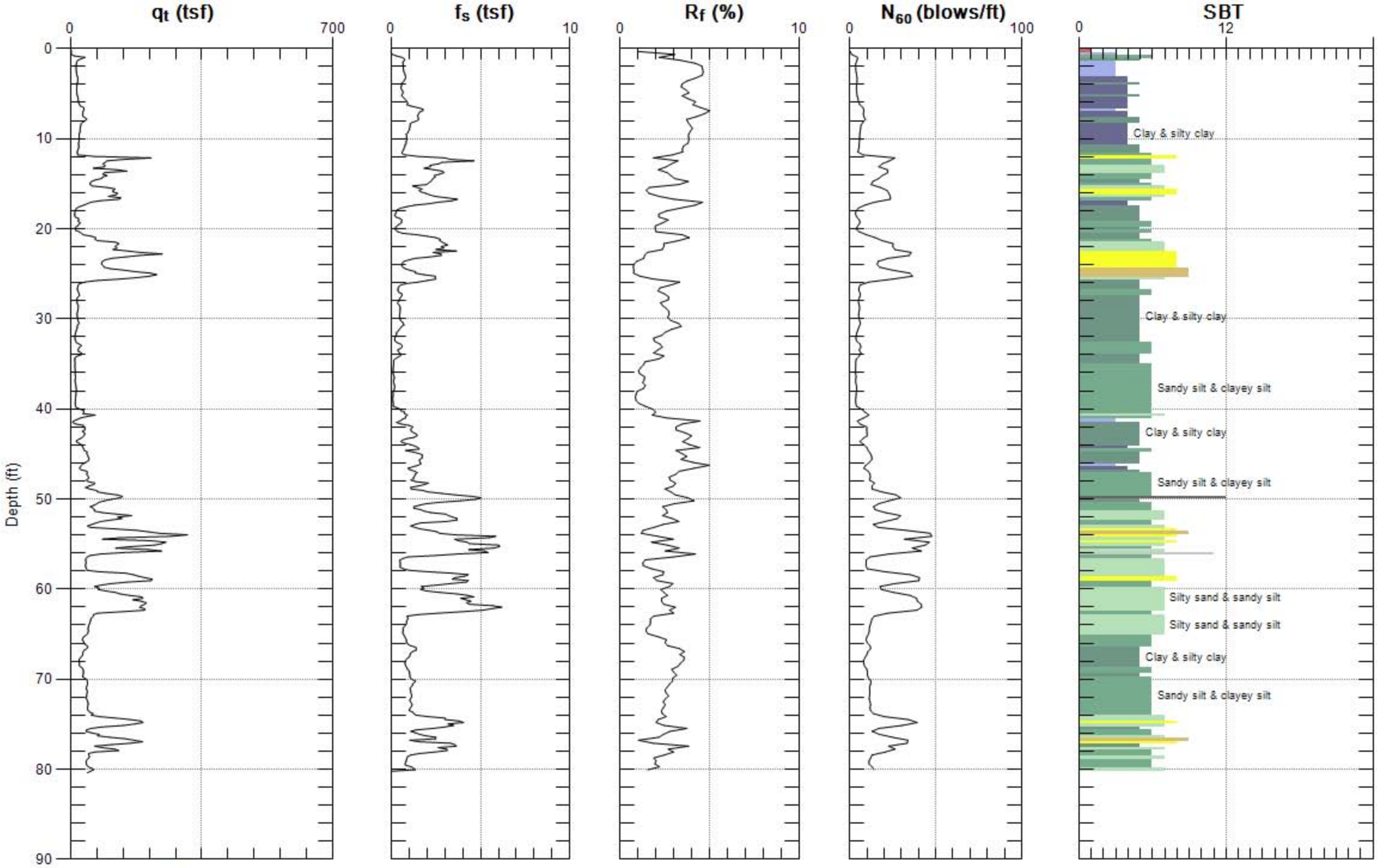

Max. Depth: 80.381 (ft)
Avg. Interval: 0.328 (ft)

SBT: Soil Behavior Type (Robertson 1990)

ROCKRIDGE GEOTECHNICAL

Site: MACARTHUR BART
Sounding: CPT-RR-8

Engineer: L.MEDEIROS
Date: 3/5/2011 03:57

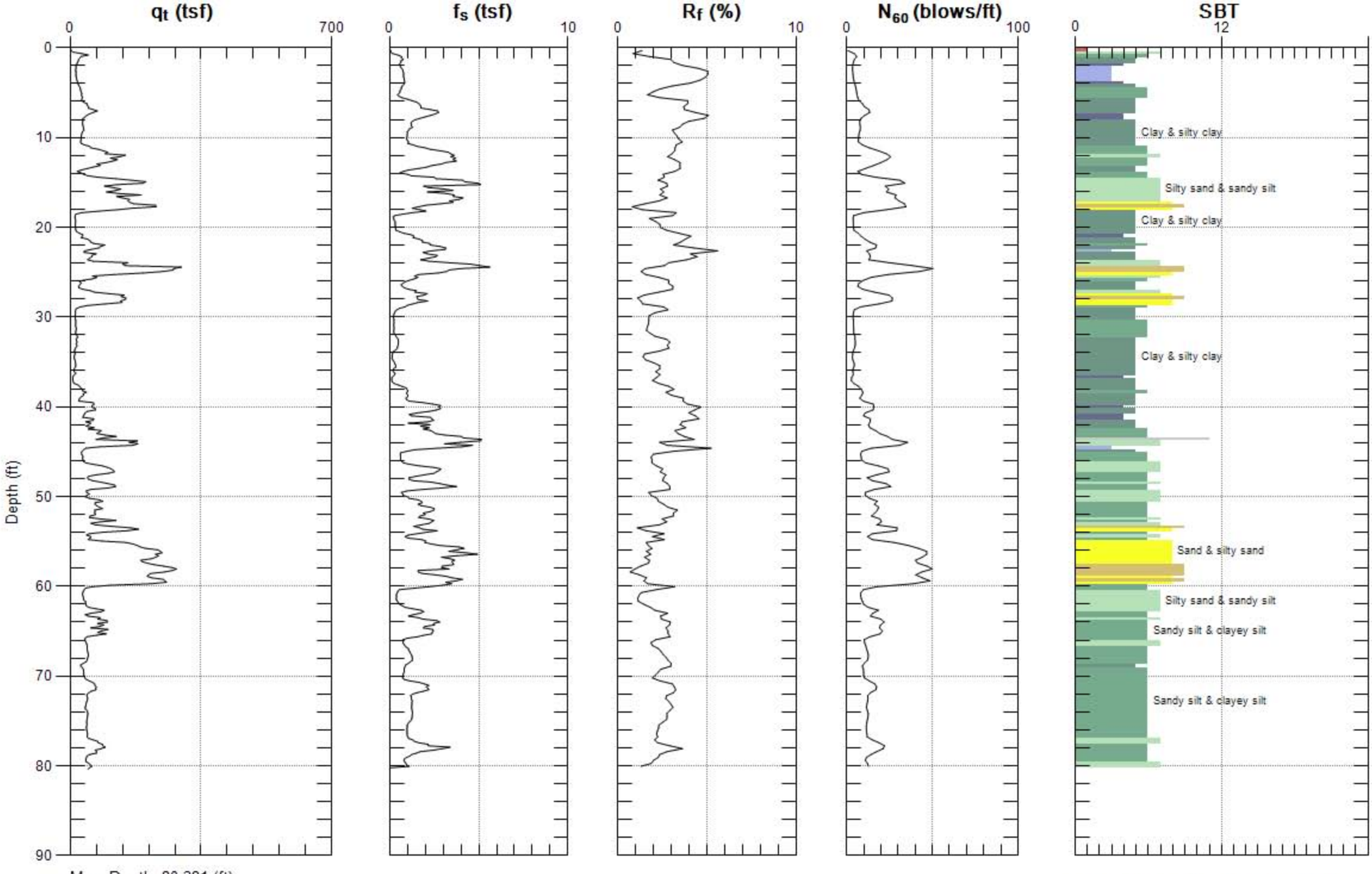

Max. Depth: 80.381 (ft)
Avg. Interval: 0.328 (ft)

SBT: Soil Behavior Type (Robertson 1990)

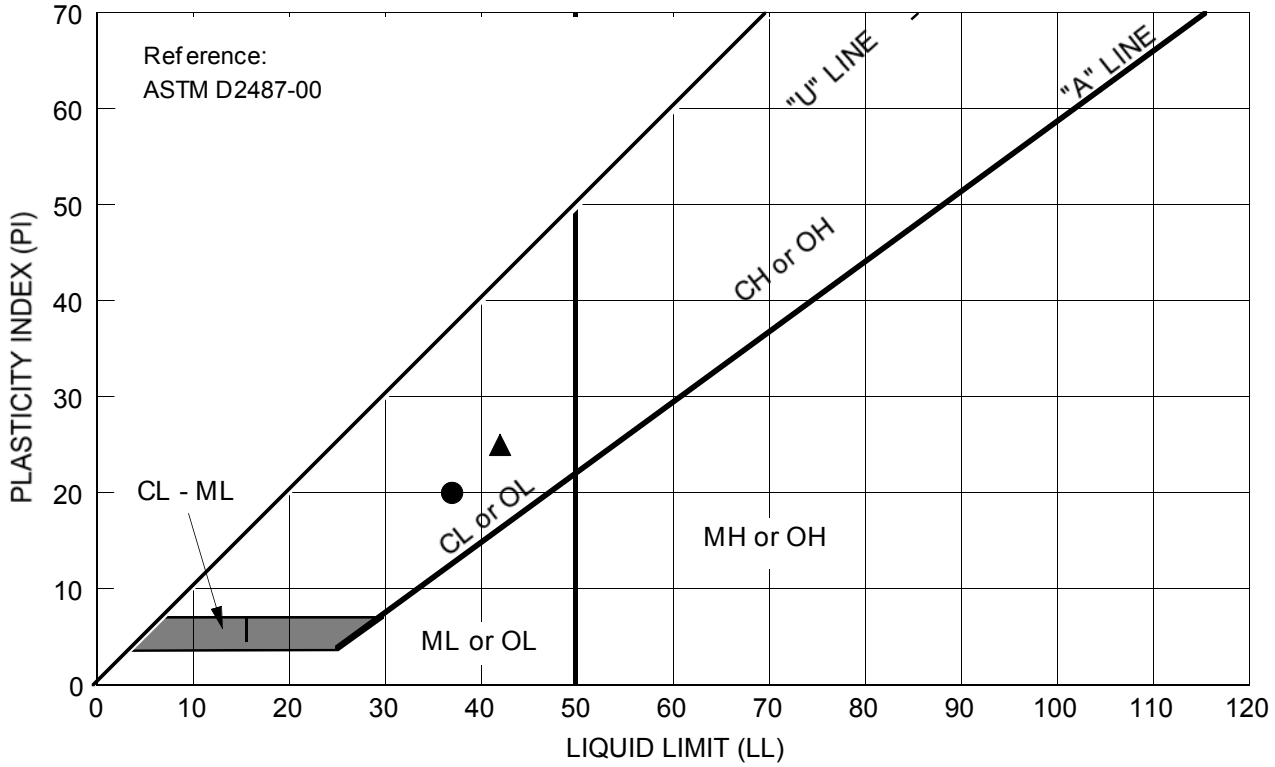

Symbol	Source	Description and Classification	Natural M.C. (%)	Liquid Limit (%)	Plasticity Index (%)	% Passing #200 Sieve
●	B-RR-1 at 11.0 feet	CLAY (CL), olive-gray	27.4	37	20	--
▲	B-RR-3 at 4.0 feet	SANDY CLAY with GRAVEL (CL), gray mottled with yellow-brown	27.6	42	25	--

MACARTHUR TRANSIT VILLAGE
BLOCK D
Oakland, California

ROCKRIDGE GEOTECHNICAL

PLASTICITY CHART

Date 04/07/11 | Project No. 10-272 | Figure B-1

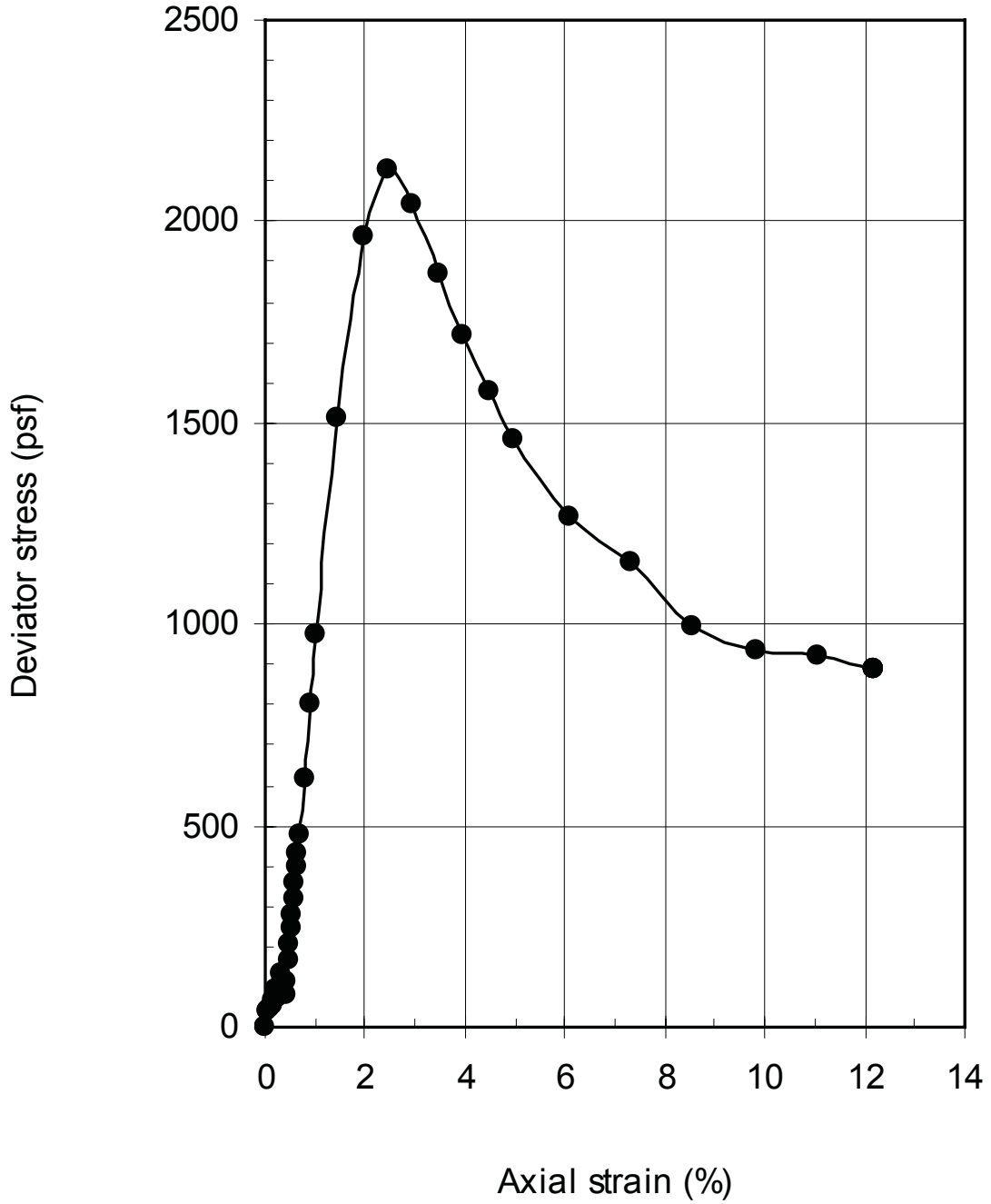

SAMPLER TYPE	Shelby Tube (ST)			SHEAR STRENGTH	1,100 psf
DIAMETER (in.)	2.87	HEIGHT (in.)	5.89	STRAIN AT FAILURE	2.5 %
MOISTURE CONTENT	22.7 %			CONFINING PRESSURE	700 psf
DRY DENSITY	104 pcf			STRAIN RATE	0.5 % / min.
DESCRIPTION	CLAY with SAND (CL), olive mottled with gray			SOURCE	B-RR-2 @ 10 ft

MACARTHUR TRANSIT VILLAGE
BLOCK D
Oakland, California

ROCKRIDGE GEOTECHNICAL

UNCONSOLIDATED-UNDRAINED TRIAXIAL COMPRESSION TEST

Date 04/06/11	Project No. 10-272	Figure B-2

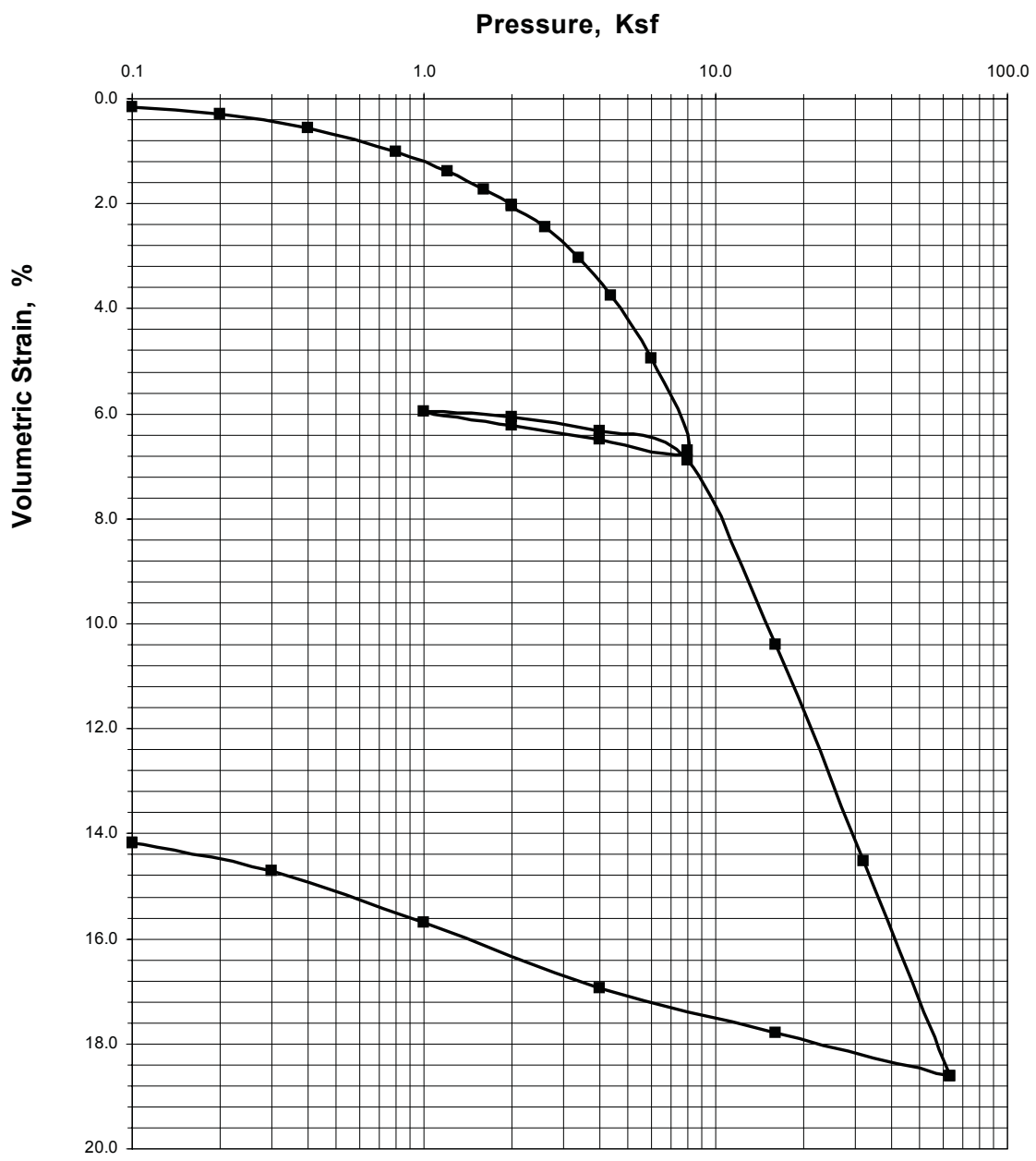

SAMPLER TYPE:	Shelby Tube (ST)			CONDITION	BEFORE TEST			AFTER TEST	
DIAMETER (in.)	2.42	HEIGHT (in.)	1.00	WATER CONTENT	W_o	25.6	%	W_f	18.4 %
OVERBURDEN PRESSURE, p_o	1,300	psf		VOID RATIO	e_o	0.74		e_f	0.49
PRECONSOL. PRESSURE, p_c	4,000	psf		SATURATION	S_o	93	%	S_f	100 %
COMPRESSION RAIO, C_{ec}	0.14			DRY DENSITY	γ_d	97	pcf	γ_d	113 pcf
LL	37	PL	17	PI	20	G_s	2.70	(assumed)	
DESCRIPTION	CLAY (CL), olive-gray					SOURCE	B-RR-1 at 15 feet		

MACARTHUR TRANSIT VILLAGE
BLOCK D
Oakland, California

ROCKRIDGE GEOTECHNICAL

CONSOLIDATION TEST REPORT

Date 04/06/11 | Project No. 10-272 | Figure B-3

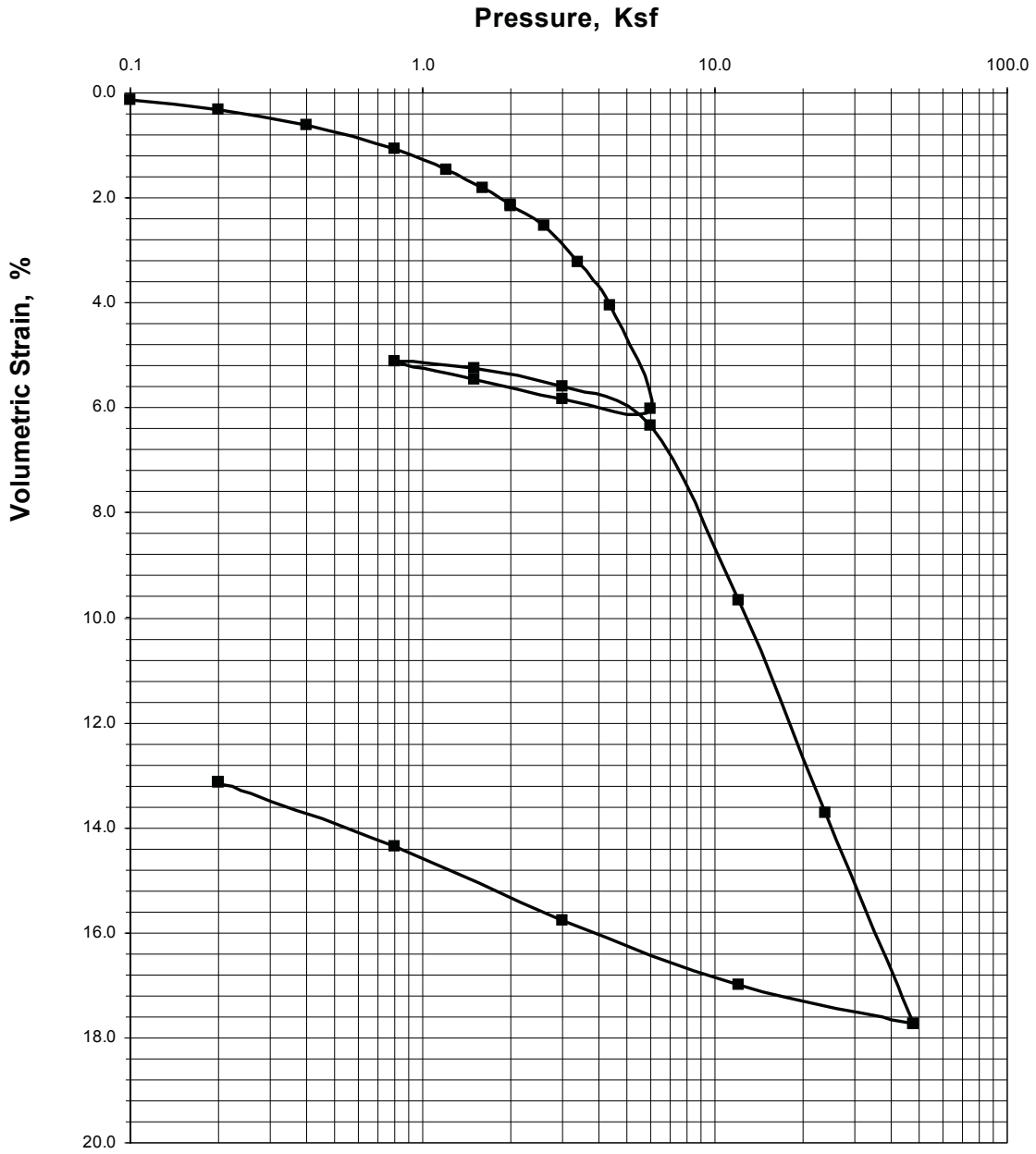

SAMPLER TYPE:	Shelby Tube (ST)			CONDITION	BEFORE TEST			AFTER TEST	
DIAMETER (in.)	2.42	HEIGHT (in.)	1.00	WATER CONTENT	W_o	25.0	%	W_f	17.2 %
OVERBURDEN PRESSURE, p_o	1,010	psf		VOID RATIO	e_o	0.71		e_f	0.46
PRECONSOL. PRESSURE, p_c	3,300	psf		SATURATION	S_o	95	%	S_f	100 %
CONPRESSION RAIO, C_{ec}	0.14			DRY DENSITY	γ_d	99	pcf	γ_d	115 pcf
LL --	PL --	PI --		G_s	2.70	(assumed)			
DESCRIPTION	CLAY with SAND (CL), olive mottled with gray			SOURCE	B-RR-2 at 10 feet				

MACARTHUR TRANSIT VILLAGE
BLOCK D
Oakland, California

ROCKRIDGE GEOTECHNICAL

CONSOLIDATION TEST REPORT

Date 04/06/11 | Project No. 10-272 | Figure B-4

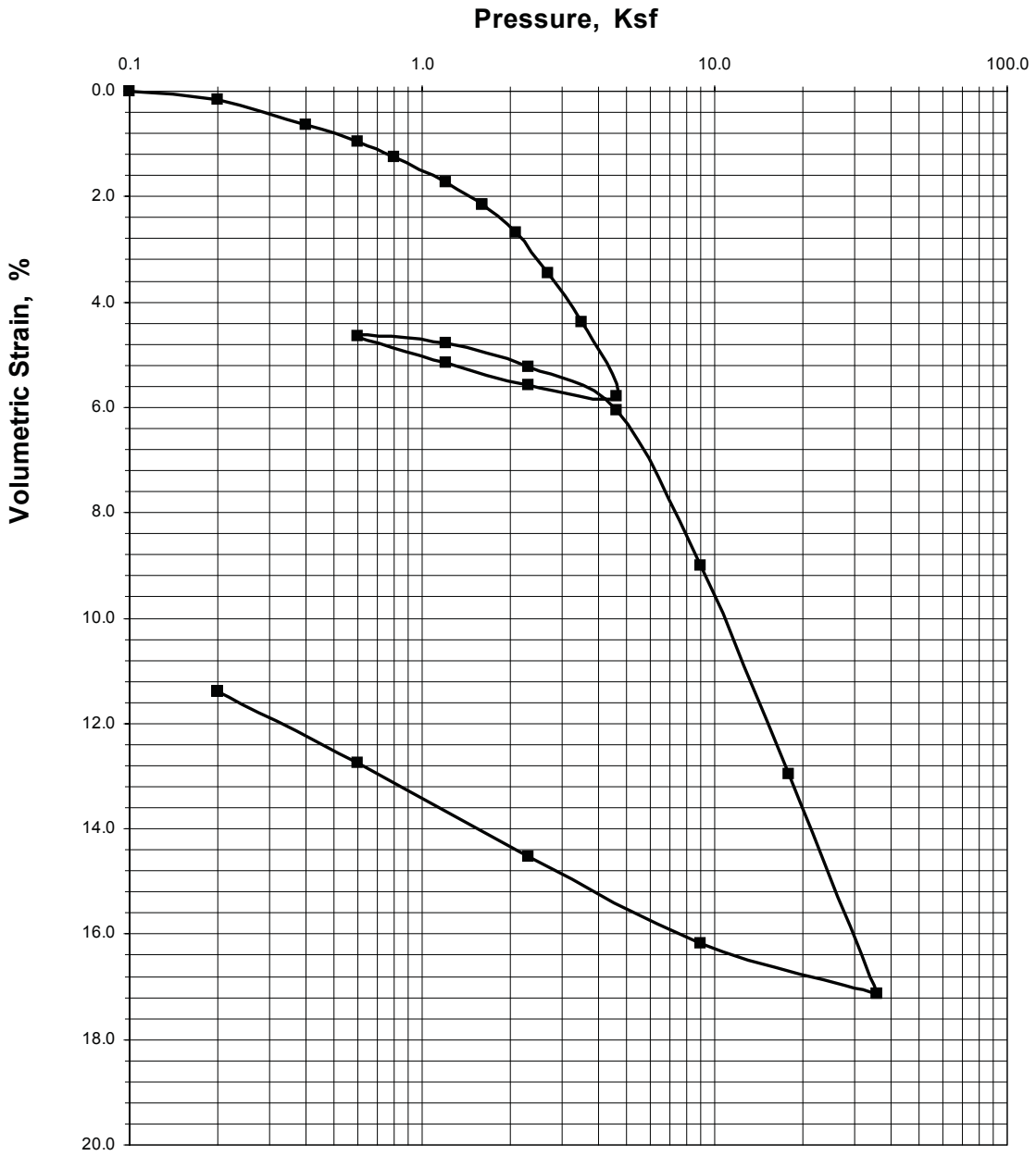

SAMPLER TYPE:	Shelby Tube (ST)			CONDITION	BEFORE TEST			AFTER TEST	
DIAMETER (in.)	2.42	HEIGHT (in.)	1.00	WATER CONTENT	W_o	26.4	%	W_f	20.9 %
OVERBURDEN PRESSURE, p_o	2,170	psf		VOID RATIO	e_o	0.79		e_f	0.56
PRECONSOL. PRESSURE, p_c	3,100	psf		SATURATION	S_o	90	%	S_f	100 %
CONPRESSION RAIO, C_{ec}	0.14			DRY DENSITY	γ_d	94	pcf	γ_d	108 pcf
LL --	PL --	PI --		G_s	2.70	(assumed)			
DESCRIPTION	CLAY (CL), gray			SOURCE	B-RR-2 at 30 feet				

MACARTHUR TRANSIT VILLAGE
BLOCK D
Oakland, California

ROCKRIDGE GEOTECHNICAL

CONSOLIDATION TEST REPORT

Date 04/06/11	Project No. 10-272	Figure B-5

E T S

Environmental Technical Services

975 Transport Way, Suite 2
Petaluma, CA 94954
(707) 778-9605/FAX 778-9612
e-mail: entech@pacbell.net

-Soil, Water & Air Testing & Monitoring
-Analytical Labs
-Technical Support

Serving people and the environment so that both benefit.

COMPANY:	Rockridge Geotechnical, 4379 Piedmont Avenue, Oakland, CA 94611			ANALYST(S)	SUPERVISOR
ATTN:	Logan Medeiros & Rus Thompson		DATE of	D. Salinas	D. Jacobson
JOB SITE:	MacArthur Transit Village, Block D, Oakland,	DATE RECEIVED	COMPLETION	S. Santos	LAB DIRECTOR
PROJ. NO.:	10-272 California	3/14/2011	3/21/2011		G.S. Conrad PhD

LAB SAMPLE NUMBER	SAMPLE ID	DESCRIPTION of SOIL and/or SEDIMENT	SOIL pH -log[H+]	NOMINAL RESISTIVITY ohm-cm	ELECTRICAL CONDUCTIVITY µmhos/cm	SULFATE SO4 ppm	CHLORIDE Cl ppm
04348-1	MTV1-BD/O	B-3-1 @ 2.0'	**7.40**	**977**	**[1020]**	**117**	**30**
Method	Detection	Limits --->	---	1	0.1	1	1

LAB SAMPLE NUMBER	SAMPLE ID	DESCRIPTION of SOIL and/or SEDIMENT	SALINITY ECe mmhos/cm	SOLUBLE SULFIDES (S=) ppm	SOLUBLE CYANIDES (CN=) ppm	REDOX mV	PERCENT MOISTURE %
04348-1	MTV1-BD/O	B-3-1 @ 2.0'		**0.051** ***{negative}***		**+223.5**	
Method	Detection	Limits --->	---	0.1	0.1	1	0.1

********** COMMENTS **********

Resistivity is under 1,000 ohm-cm which is poor, but soil reaction (i.e., pH) is mildly alkaline which helps; both sulfates and chlorides are low enough; sulfides are negligible; this soil is only mildly reduced. Standard CalTrans times to perfortion for this sample are as follows: for 18 ga steel the time is >24 yrs, and for 12 ga it goes to >54 yrs. For ductile/gray/ mild iron/steel the calculated average pitting rate is ≈0.15 mm/yr, thus pitting to a 2 mm depth is ≈13 yrs, and to a 4 mm depth is >26 yrs. Chlorides are very low, thus there sahould be no adverse impact in concrete steel reinforcement; and sulfates are low enough that there should be no adverse impact on concrete, cement, mortar or grout. Neither sulfides nor redox should be an issue. This soil would not benefit from alkaline treatment because its pH is already alkaline enough. To increase metals longevity any more in this soil would require metals upgrading (e.g. increased gauge or to more resistant steels, etc.); or other actions could be taken. Standard cathodic protection along with coating or wrapping pipe could be employed (i.e., requiring fairly typical anodic masses and impressed currents). Other options include increased or special engineering fill; or using alternatives where appropriate, i.e., plastic, fiberglass or concrete pipe, etc. Last, standard concrete mixes should be fine in this soil based on these results.

\\\\NOTES: Methods are from following sources: extractions by Cal Trans protocols as per Cal Test 417 (SO4), 422 (Cl), and 532/643 (pH & resistivity); &/or by ASTM Vol. 4.08 & ASTM Vol. 11.01 (=EPA Methods of Chemical Analysis, or Standard Methods); pH - ASTM G 51; Spec. Cond. - ASTM D 1125; resistivity - ASTM G 57; redox - Pt probe/ISE; sulfate - extraction Title 22, detection ASTM D 516 (=EPA 375.4); chloride - extraction Title 22, detection ASTM D 512 (=EPA 325.3); sulfides - extraction by Title 22, and detection EPA 376.2 (= SMEWW 4500-S D); cyanides - extraction by Title 22, and detection by ASTM D 4374 (=EPA 335.2).

ROCKRIDGE GEOTECHNICAL

APPENDIX B

Logs of Borings, Cone Penetration Test Results, and Laboratory Test Results

By AMEC

PROJECT: BART MacArthur Parking Structure
West MacArthur Blvd at BART Station
Oakland, California

Boring Log Explanation

DEPTH (feet)	SAMPLES: Sample No.	SAMPLES: Sample	SAMPLES: Blows/foot	MATERIAL DESCRIPTION	LABORATORY TESTS: Moisture Content (%)	LABORATORY TESTS: Dry Density (pcf)	LABORATORY TESTS: Other
				Hammer delivery was provided by a 140-pound automatic-trip hammer with a 30-inch drop			
				Modified California drive sampler, 76 mm (3-inch) outside diameter, 64 mm (2 1/2-inch) inside diameter (with liners)			
				Standard penetration split-spoon drive sampler, 50 mm (2-inch) outside diameter, 35 mm (1 3/8-inch) inside diameter (without liners)			
			36	Blow count for last 300 mm (12 inches) of sample, or as noted			
				Distinct contact			
				Gradual or uncertain contact			
				ATD			
				Measured groundwater level prior to backfill or after well completion			
				LL=Liquid limit; PI=Plastic index			LL=27 PI=4
				Fine content (percentage of soil passing No. 200 sieve)			<200=44%
				Unconsolidated-undrained triaxial test, shear strength in psf (confining pressure in psf)			UU=500 (300)
				Testing for Corrosivity Evaluation			Corr
				Resitance Value (California Test-301)			R-value=24

NOTES:

1. The stratification lines shown on the boring logs represent the approximate boundaries between material types. The actual transitions between materials may be gradual.
2. These logs of the test borings and related information depict subsurface conditions only at the specific locations and at the particular time the boring was made.
3. Soil conditions at other locations may differ from conditions occurring at these locations. Also, the passage of time may result in changes in the soil and groundwater conditions at these locations.
4. Soil colors from Munsell Soil Color Charts.

PROJECT: BART MacArthur Parking Structure West MacArthur Blvd at BART Station Oakland, California	**Log of Boring No. B-1**
BORING LOCATION: See Figures 2	ELEVATION AND DATUM: 68 feet
DRILLING CONTRACTOR: Gregg Drilling & Testing, Inc.	DATE STARTED: 5/22/2010 / DATE FINISHED: 5/22/2010
DRILLING EQUIPMENT: M-10 XLC	TOTAL DEPTH (feet): 44.5 / MEASURING POINT: Ground Surface
DRILLING METHOD: 6-inch hollow-stem auger	DEPTH TO FREE WATER FIRST ENCOUNTERED (feet): 14.4 2:45pm
SAMPLING METHOD: See Boring Log Explanation, Figure A-1	DEPTH TO WATER AT COMPLETION (feet, date/time): 13 5:10pm
HAMMER WEIGHT: 140 pounds - Auto / HAMMER DROP: 30 inches	LOGGED BY: E. Aw and Y. Ma

DEPTH (feet)	SAMPLES: Sample No.	Sample	Blows/foot	MATERIAL DESCRIPTION		LABORATORY TESTS: Moisture Content (%)	Dry Density (pcf)	Other
1				ASPHALT (6 inches)/AGGREGATE BASE ROCK (3 inches)				
				SILTY CLAY (CL/CH) Stiff, black (2.5Y 2.5/1), dry to moist, medium to high plasticity [FILL?]				
2								
3	1	X	15			17 23	111 --	LL=47 PI=30 UU=3830 (3000) Corr
4				SILTY CLAY with SAND (CL) Stiff, greenish Gray (GLEY1 6/1), low plasticity fines, occasional gravel				
5								
6	2	X	20			23	101	
7								
8				- becoming greenish Gray (GLEY1 5/1)				
9	3	X	23			26 26	98.5 --	Corr
10								
11								
12								
13				SILTY SAND (SM) Loose, very dark Gray (5YR 3/1), medium sand	5:10pm 2:45pm			
14								
15								
16	4	X	13			31	90.5	LL=28 PI=3 <200=31%
17								

GEES-SOIL 7/09 160260_SOIL LOGS.GPJ GES32003-7.GDT 6/28/10

GT-1 (5/09)

PROJECT: BART MacArthur Parking Structure
West MacArthur Blvd at BART Station
Oakland, California

Log of Boring No. B-1 cont.

DEPTH (feet)	SAMPLES: Sample No.	SAMPLES: Sample	SAMPLES: Blows/foot	MATERIAL DESCRIPTION	LABORATORY TESTS: Moisture Content (%)	LABORATORY TESTS: Dry Density (pcf)	LABORATORY TESTS: Other
18				CLAYEY SAND (SC) Cont'd.			
19							
20				CLAYEY SAND (SC) Medium dense, dark yellowish brown (10YR 4/4),with sandy clay lenses, sand is fine to coarse, with occasional gravel			
21							
22							
23	5	X	26		21	107	<200=21%
24							
25							
26				CLAYEY SAND/SANDY CLAY (SC/CL) Loose/medium stiff to stiff, brown (7.5YR 4/4) mottled with dark brown (7.5YR 3/4), sand is fine to medium			
27							
28							
29	6	X	11		25	101	<200=47%
30							
31							
32				CLAYEY SAND/SANDY CLAY (SC/CL) Stiff/medium dense, dark grayish green (GLEY1 3/2), sand is fine to coarse, with gravel up to 2 inches (mixed lenses of CL and SC)			
33							
34	7	X	34		13	125	<200=28%
35							
36							
37				SANDY CLAY (CL) Stiff, olive yellow (2.5Y 6/6), fine sand, with occasional gravel up to 2 inches			
38							
39	8	X	30		20.5	107	

GT-2 (5/09)

PROJECT: BART MacArthur Parking Structure
West MacArthur Blvd at BART Station
Oakland, California

Log of Boring No. B-1 cont.

DEPTH (feet)	SAMPLES: Sample No.	SAMPLES: Sample	SAMPLES: Blows/foot	MATERIAL DESCRIPTION	LABORATORY TESTS: Moisture Content (%)	LABORATORY TESTS: Dry Density (pcf)	LABORATORY TESTS: Other
	8	X		SANDY CLAY (CL) Cont'd.			
40							
41							
42							
43							
44	9	X	68		23	103	
				Bottom of boring at 44.5 feet. Boring backfilled with cement grout.			

GT-2 (5/09)

PROJECT: BART MacArthur Parking Structure
West MacArthur Blvd at BART Station
Oakland, California

Log of Boring No. B-2

BORING LOCATION: See Figures 2	ELEVATION AND DATUM: 65 feet
DRILLING CONTRACTOR: Gregg Drilling & Testing, Inc.	DATE STARTED: 5/22/2010 / DATE FINISHED: 5/22/2010
DRILLING EQUIPMENT: M-10 XLC	TOTAL DEPTH (feet): 51.25 / MEASURING POINT: Ground Surface
DRILLING METHOD: 6-inch hollow-stem auger	DEPTH TO FREE WATER FIRST ENCOUNTERED (feet): 11 8:50am
SAMPLING METHOD: See Boring Log Explanation, Figure A-1	DEPTH TO WATER AT COMPLETION (feet, date/time): 10.5 11:45am
HAMMER WEIGHT: 140 pounds - Auto / HAMMER DROP: 30 inches	LOGGED BY: E. Aw and Y. Ma

DEPTH (feet)	SAMPLES: Sample No.	Sample	Blows/ foot	MATERIAL DESCRIPTION	LABORATORY TESTS: Moisture Content (%)	Dry Density (pcf)	Other
1				ASPHALT (4 inches)/SANDY FILL (12 inches)			Bulk sample taken at 0.3'-5': R_value=10
2	1	X	18	SILTY CLAY with SAND (CH) Stiff, light olive brown (2.5Y 5/6), moist, fine sand [FILL?]	22.5	100.5	LL=54 PI=33
3							
4							
5							
6	2	X	14	CLAYEY SAND (SC) Loose, grayish green (GLEY1 4/2), moist, sand is fine to coarse	21 21	101 --	<200=41% Corr
7							
8							
9	3	X	11		20	--	<200=29% Corr
10							
11	4		26	11:45am 8:50am			
12	5	X	9	SILTY CLAY (CL) Medium stiff, yellowish brown (10YR 5/6), moist, with trace sand	24	102	UU=535 (3000)
13							
14							
15				CLAYEY SAND (SC) Medium dense, dark yellowish brown (10YR 4/6), sand is fine to coarse, with occasional gravel			
16	6	X	24		19	112	LL=23 PI=12 <200=18%
17							

GEES-SOIL 7/09 160260_SOIL LOGS.GPJ GES32003-7.GDT 6/28/10

GT-1 (5/09)

PROJECT: BART MacArthur Parking Structure
West MacArthur Blvd at BART Station
Oakland, California

Log of Boring No. B-2 cont.

DEPTH (feet)	SAMPLES Sample No.	Sample	Blows/ foot	MATERIAL DESCRIPTION	LABORATORY TESTS Moisture Content (%)	Dry Density (pcf)	Other
18				CLAYEY SAND (SC) Cont'd.			
19				CLAYEY SAND (SC) Dense, dark yellowish brown (10YR 3/6), medium to coarse sand, with fine gravel			
20							
21	7	X	50		13	114.5	
22							
23							
24							
25							
26	8		30				<200=18%
27							
28							
29				SILTY CLAY (CL) Stiff, dark yellowish brown (10YR 4/6)			
30							
31	9		11				
32							
33							
34							
35				- with CLAYEY SAND (SC) lenses			
36	10	X	25		20	110	
37							
38							
39							

GT-2 (5/09)

PROJECT: BART MacArthur Parking Structure
West MacArthur Blvd at BART Station
Oakland, California

Log of Boring No. B-2 cont.

DEPTH (feet)	SAMPLES Sample No.	Sample	Blows/ foot	MATERIAL DESCRIPTION	LABORATORY TESTS Moisture Content (%)	Dry Density (pcf)	Other
40				SANDY CLAY (CL) Stiff to very stiff, brownish yellow (10YR 6/6), with angular gravel up to 2 inches, with clay lenses			
41	11	X	35		23	103	<200=56%
42							
43							
44				SILTY SAND (SM) Dense, very dark grayish brown (10YR 3/2) and dark yellowish brown (10YR 4/6),			
45							
46	12	X	38		22	105	<200=49.7%
47							
48							
49							
50				becoming dark yellowish brown (10YR 4/6)			
51	13	X	90/9"		23	104	
				Bottom of boring at 51.25 feet. Boring backfilled with cement grout.			

GT-2 (5/09)

PROJECT: BART MacArthur Parking Structure West MacArthur Blvd at BART Station Oakland, California		**Log of Boring No. B-3**	
BORING LOCATION: See Figures 2		ELEVATION AND DATUM: 65 feet	
DRILLING CONTRACTOR: Gregg Drilling & Testing, Inc.		DATE STARTED: 5/22/2010	DATE FINISHED: 5/22/2010
DRILLING EQUIPMENT: M-10 XLC		TOTAL DEPTH (feet): 9.5	MEASURING POINT: Ground Surface
DRILLING METHOD: 6-inch hollow-stem auger		DEPTH TO FREE WATER FIRST ENCOUNTERED (feet):	
SAMPLING METHOD: See Boring Log Explanation, Figure A-1		DEPTH TO WATER AT COMPLETION (feet, date/time): 7 1:20pm	
HAMMER WEIGHT: 140 pounds - Auto	HAMMER DROP: 30 inches	LOGGED BY: E. Aw and Y. Ma	

DEPTH (feet)	SAMPLES: Sample No.	SAMPLES: Sample	SAMPLES: Blows/foot	MATERIAL DESCRIPTION	LABORATORY TESTS: Moisture Content (%)	LABORATORY TESTS: Dry Density (pcf)	LABORATORY TESTS: Other
1				ASPHALT (4 inches)/SANDY FILL (12 inches)			Bulk sample taken at 0-5': R_value=10
2				CLAYEY SAND with GRAVEL (SC) Medium dense, dark yellowish brown (10YR 4/4), moist, with occasional gravel up to 1 inch			
3	1	X	23		21	101	
4							
5							
6	2	X	10				
7				▼ 1:20pm			
8							
9	3	X	27		17	115	
10				Bottom of boring at 9.5 feet. Boring backfilled with cement grout.			
11							
12							
13							
14							
15							
16							
17							

GT-1 (5/09)

0GEES-SOIL 7/09 160260_SOIL LOGS.GPJ GES32003-7.GDT 6/28/10

GREGG

AMEC

Site: BART MACARTHUR **Engineer: Y.MA**

Sounding: CPT-01A **Date: 2010-05-22 01:38**

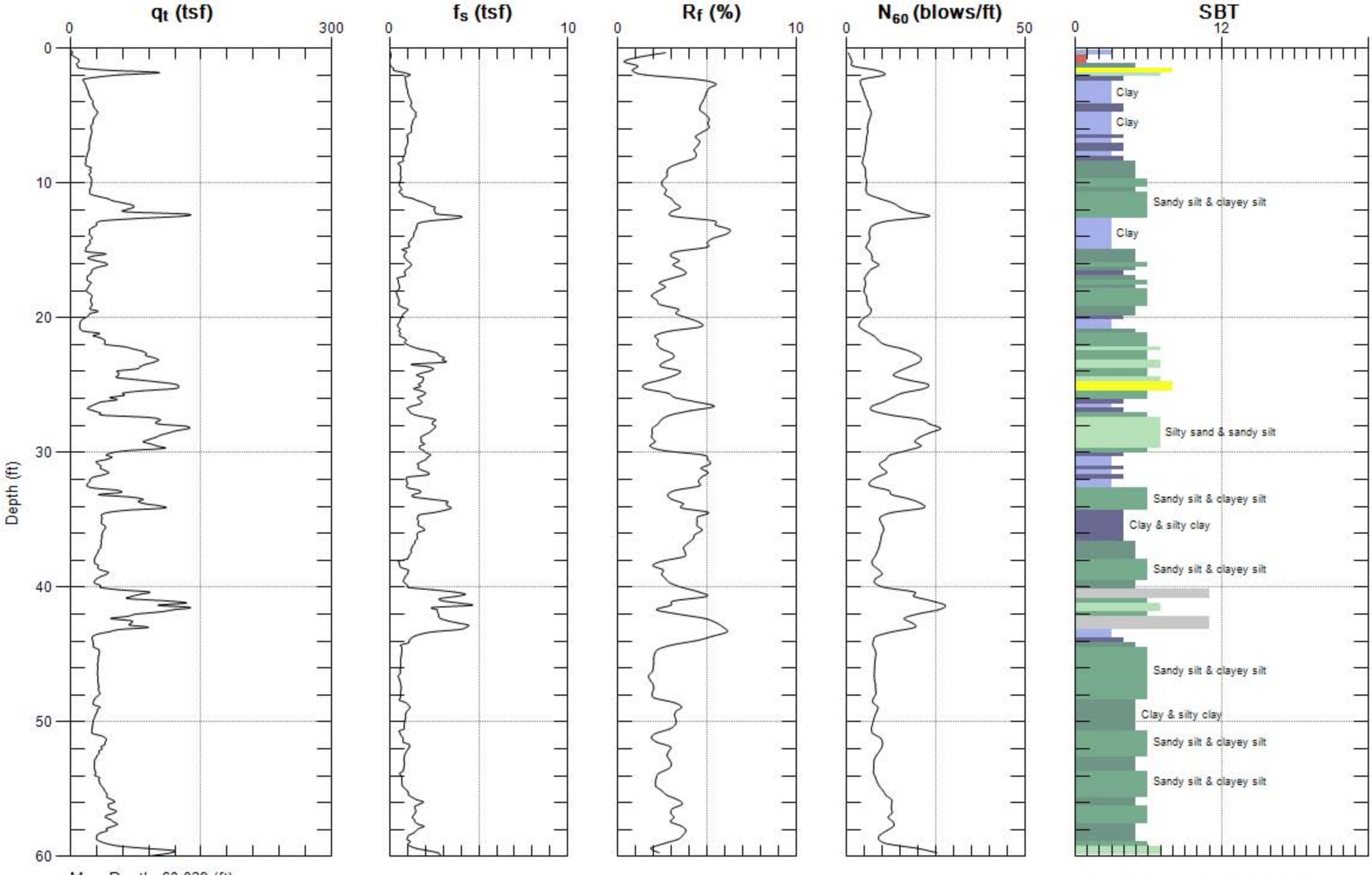

Max. Depth: 60.039 (ft)
Avg. Interval: 0.328 (ft)

SBT: Soil Behavior Type (Robertson 1990)

GREGG

AMEC

Site: BART MACARTHUR **Engineer: Y.MA**

Sounding: CPT-01 **Date: 2010-05-22 10:17**

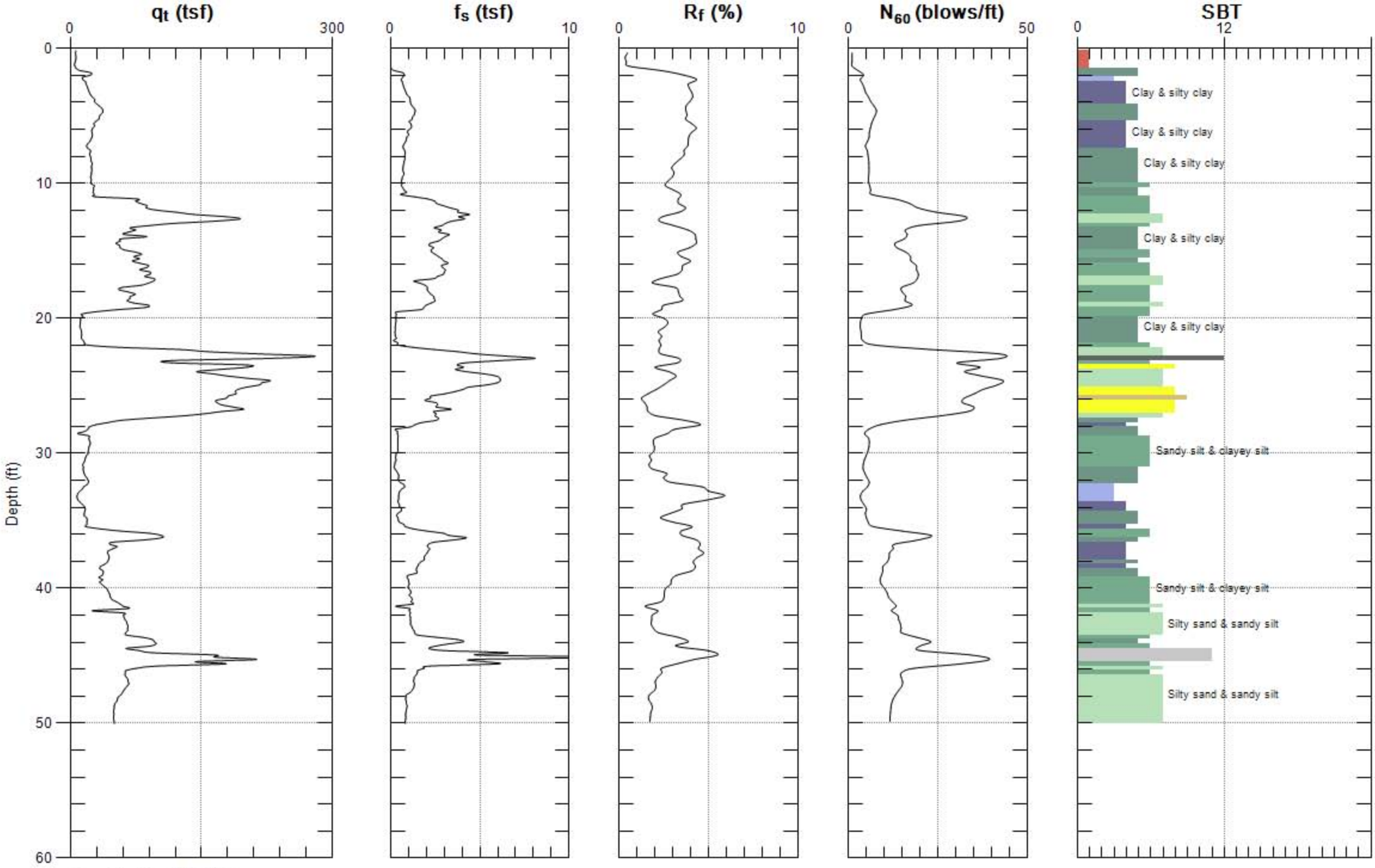

Max. Depth: 50.033 (ft)
Avg. Interval: 0.328 (ft)

SBT: Soil Behavior Type (Robertson 1990)

GREGG

AMEC

Site: BART MACARTHUR **Engineer: Y.MA**

Sounding: CPT-02 **Date: 2010-05-22 11:25**

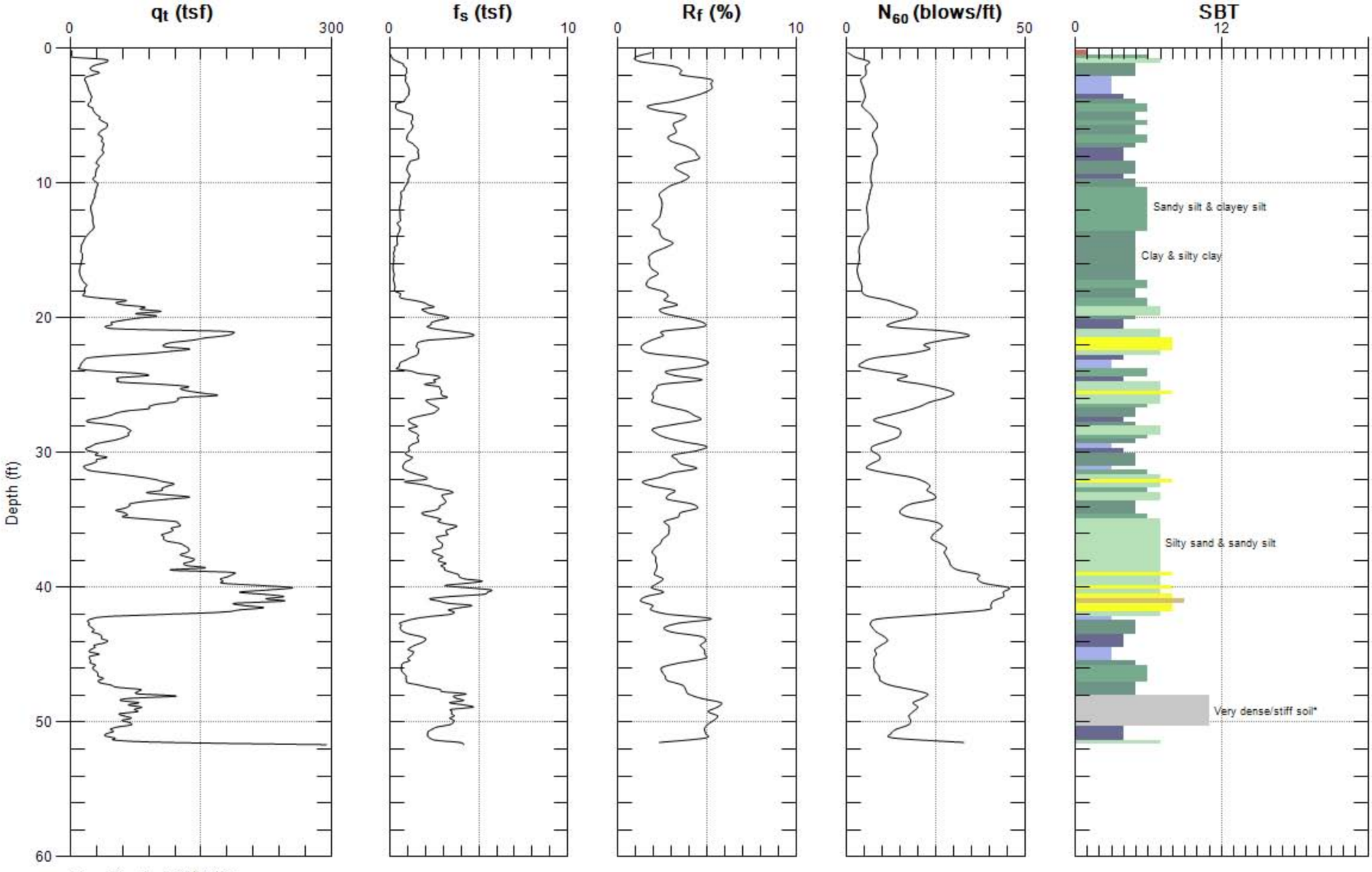

Max. Depth: 51.673 (ft)
Avg. Interval: 0.328 (ft)

SBT: Soil Behavior Type (Robertson 1990)

GREGG

AMEC

Site: BART MACARTHUR **Engineer: Y.MA**

Sounding: CPT-03 **Date: 2010-05-22 08:48**

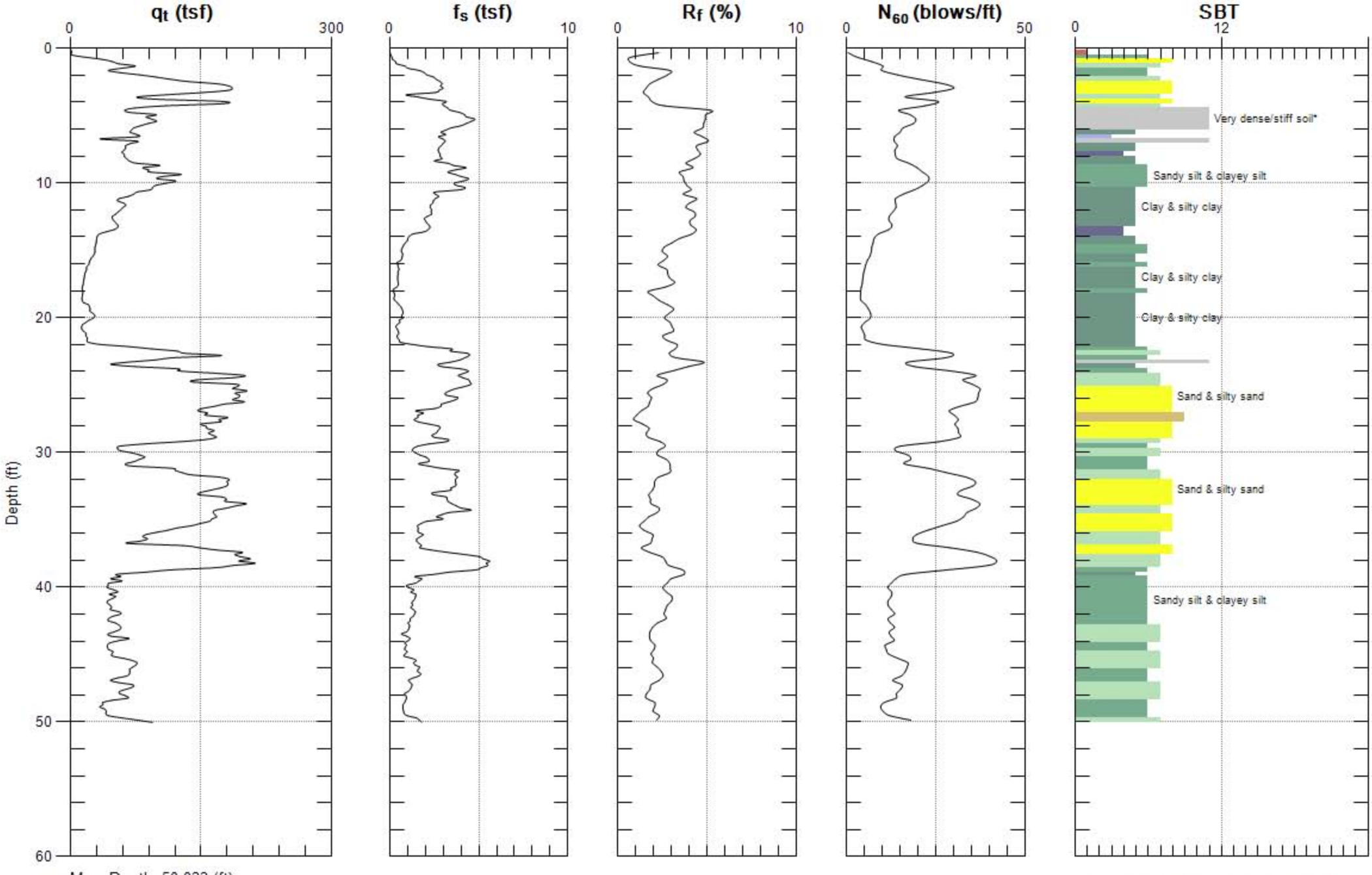

Max. Depth: 50.033 (ft)
Avg. Interval: 0.328 (ft)

SBT: Soil Behavior Type (Robertson 1990)

LIQUID AND PLASTIC LIMITS TEST REPORT

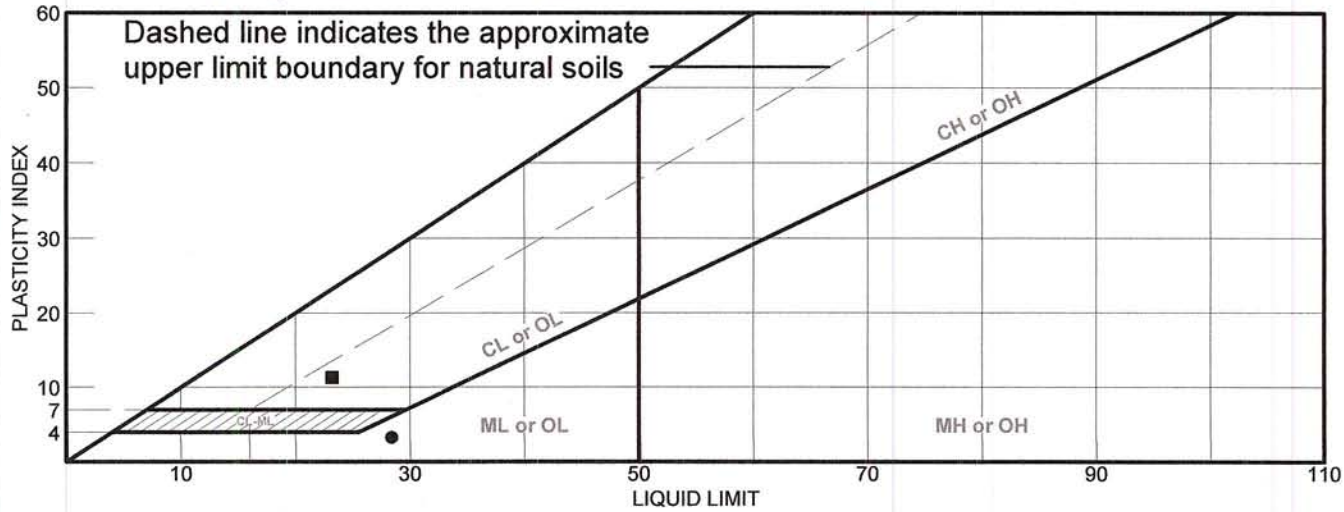

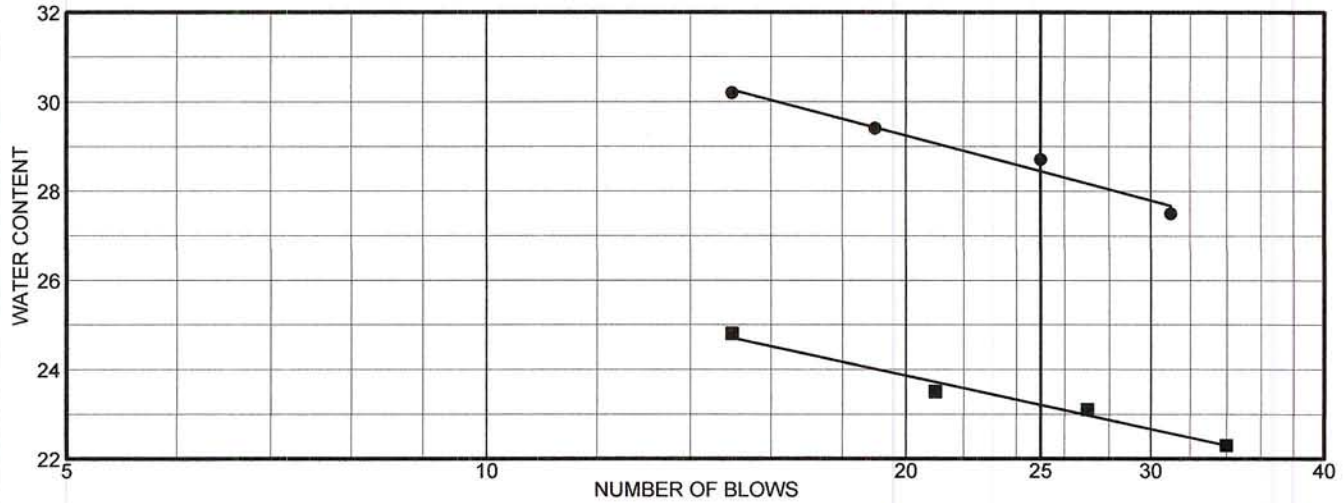

	MATERIAL DESCRIPTION	LL	PL	PI	%<#40	%<#200	USCS
●	Olive SILT	28.4	25.1	3.3			
■	Olive Brown Lean Clayey SAND, trac Gravel	23.2	11.9	11.3			

Project No. 109-663 **Client:** AMEC Geomatrix

Project: BART MacArthur Parking - OD10-160-260

● **Source:** B1 **Sample No.:** 4-3 **Elev./Depth:** 15-16.5'

■ **Source:** B2 **Sample No.:** 6-3 **Elev./Depth:** 15-16.5'

Remarks:

●

■

LIQUID AND PLASTIC LIMITS TEST REPORT

COOPER TESTING LABORATORY

Figure

Figure_C1

LIQUID AND PLASTIC LIMITS TEST REPORT

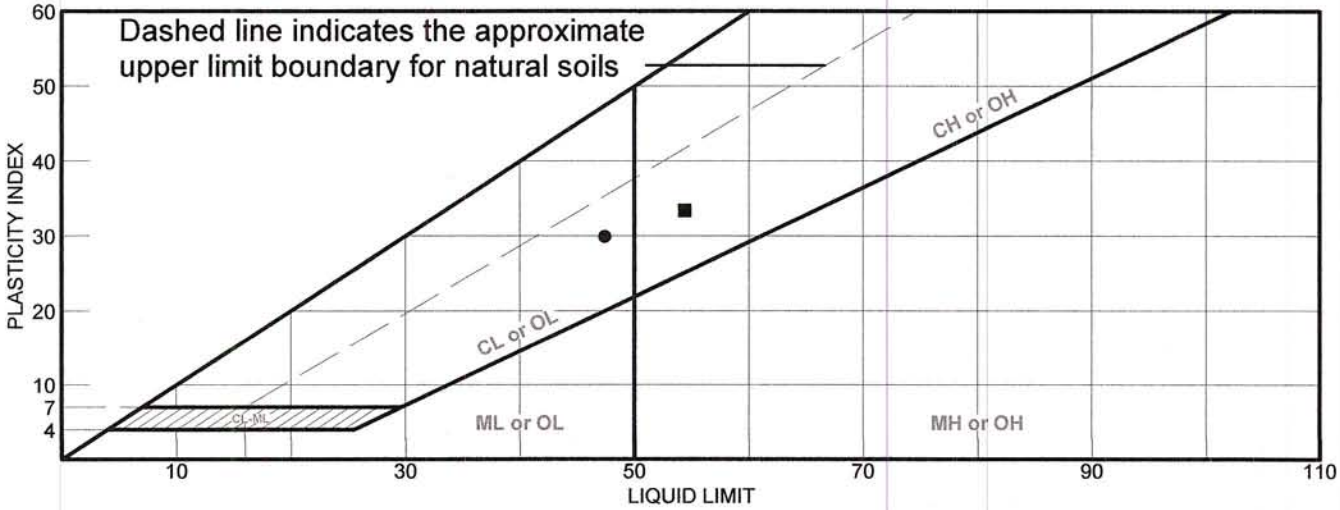

	MATERIAL DESCRIPTION	LL	PL	PI	%<#40	%<#200	USCS
●	Dark Gray Lean CLAY	47.4	17.5	29.9			
■	Pale Yellow Fat CLAY	54.4	21.0	33.4			

Project No. 109-662 **Client:** AMEC Geomatrix

Project: BART MacArthur Parking - OD10160260

● **Source:** B-1 **Sample No.:** 1 **Elev./Depth:** 3'

■ **Source:** B-2 **Sample No.:** 1-4 **Elev./Depth:** 1-2.5'

Remarks:

●

■

LIQUID AND PLASTIC LIMITS TEST REPORT

COOPER TESTING LABORATORY

Figure

Figure_C2

Unconsolidated-Undrained Triaxial Test

ASTM D-2850

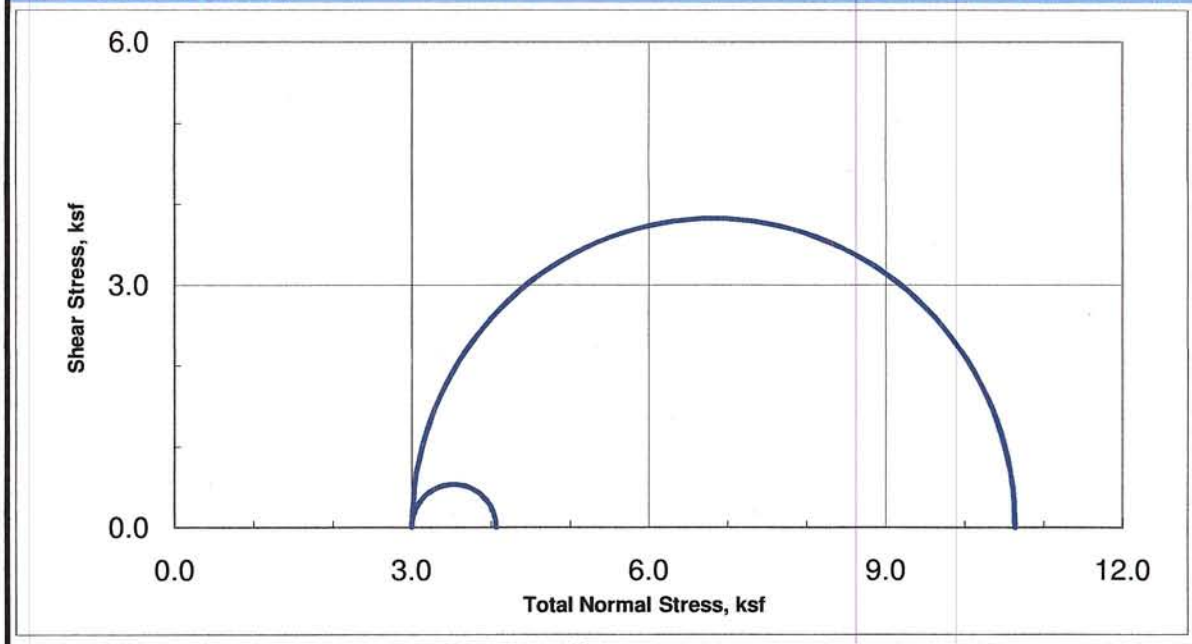

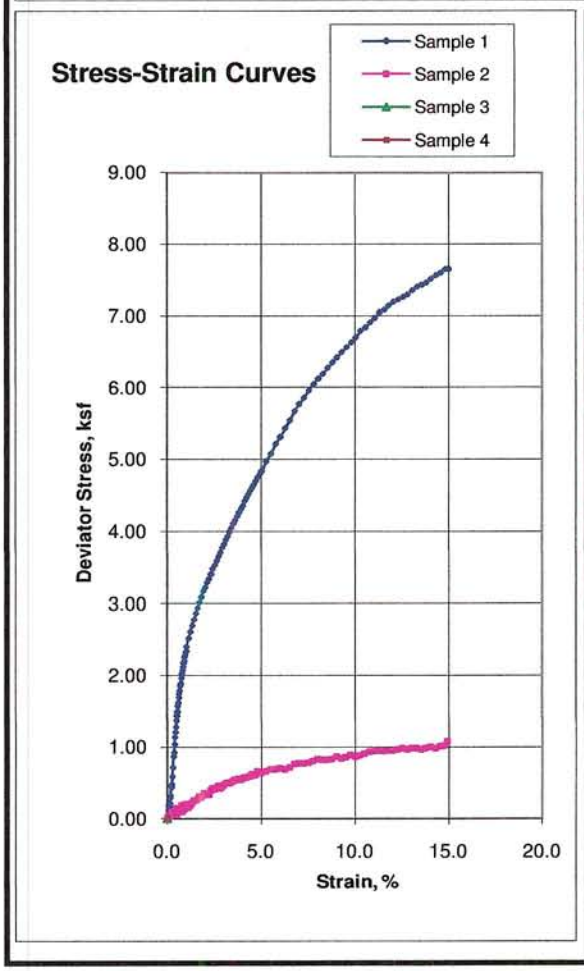

Sample Data	1	2	3	4
Moisture %	17.0	24.0		
Dry Den,pcf	110.6	102.1		
Void Ratio	0.524	0.651		
Saturation %	87.7	99.4		
Height in	5.01	5.00		
Diameter in	2.42	2.42		
Cell psi	20.8	20.8		
Strain %	15.00	15.00		
Deviator, ksf	7.657	1.070		
Rate %/min	1.00	1.00		
in/min	0.050	0.050		
Job No.:	109-662			
Client:	AMEC Geomatrix			
Project:	BART MacArthur Parking - OD10160260			
Boring:	B-1	B-2		
Sample:	2-3	5-4		
Depth ft:	5-6.5	11.5-13		

Visual Soil Description	
Sample #	
1	Greenish Gray Sandy CLAY
2	Brown Sandy SILT (slightly plastic)*
3	
4	

Remarks: * 3/4" +/- Clay @ Top not tested.

Figure_C3

R-value Test Report (Caltrans 301)

Job No.:	109-662	**Date:**	06/04/10	**Initial Moisture,**	9.7%
Client:	AMEC Geomatrix	**Tested**	MD	**R-value by Stabilometer**	**10**
Project:	BART MacArthur Parking - OD10160260	**Reduced**	RU		
Sample	B-2 @ 0-5'	**Checked**	DC	**Expansion Pressure**	**0** psf
Soil Type:	Olive Brown Clayey SAND w/ Gravel				

Specimen Number	A	B	C	D
Exudation Pressure, psi	461	280	209	
Prepared Weight, grams	1200	1200	1200	
Final Water Added, grams/cc	50	70	90	
Weight of Soil & Mold, grams	3183	3199	3237	
Weight of Mold, grams	2091	2104	2100	
Height After Compaction, in.	2.45	2.57	2.69	
Moisture Content, %	14.3	16.1	18.0	
Dry Density, pcf	118.1	111.1	108.5	
Expansion Pressure, psf	17.2	0.0	0.0	
Stabilometer @ 1000				
Stabilometer @ 2000	127	137	148	
Turns Displacement	4.05	4.4	4.9	
R-value	14	9	4	

Remarks:

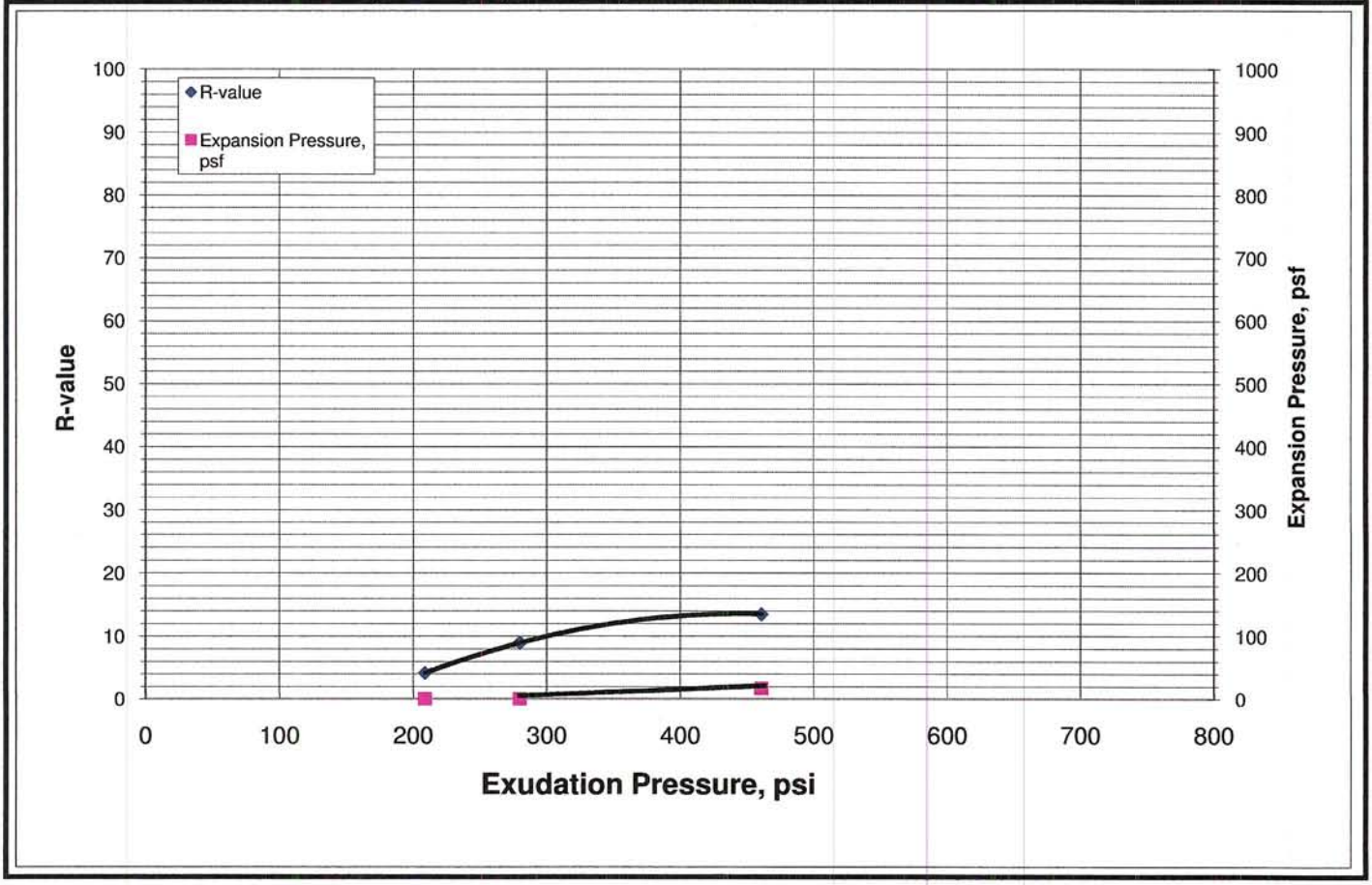

Figure_C4

R-value Test Report (Caltrans 301)

Job No.:	109-662	**Date:**	06/04/10	**Initial Moisture,**	10.4%
Client:	AMEC Geomatrix	**Tested**	MD	**R-value by Stabilometer**	**36**
Project:	BART MacArthur Parking - OD10160260	**Reduced**	RU		
Sample	B-3 @ 0-5'	**Checked**	DC	**Expansion Pressure**	**0** psf
Soil Type: Light Brown Clayey SAND w/ Gravel					

Specimen Number	A	B	C	D	**Remarks:**
Exudation Pressure, psi	437	185	240		
Prepared Weight, grams	1200	1200	1200		
Final Water Added, grams/cc	40	60	50		
Weight of Soil & Mold, grams	3157	3217	3186		
Weight of Mold, grams	2105	2096	2096		
Height After Compaction, in.	2.39	2.59	2.5		
Moisture Content, %	14.0	15.9	15.0		
Dry Density, pcf	116.9	113.1	114.8		
Expansion Pressure, psf	0.0	0.0	0.0		
Stabilometer @ 1000					
Stabilometer @ 2000	81	125	101		
Turns Displacement	3.55	3.9	3.55		
R-value	38	16	29		

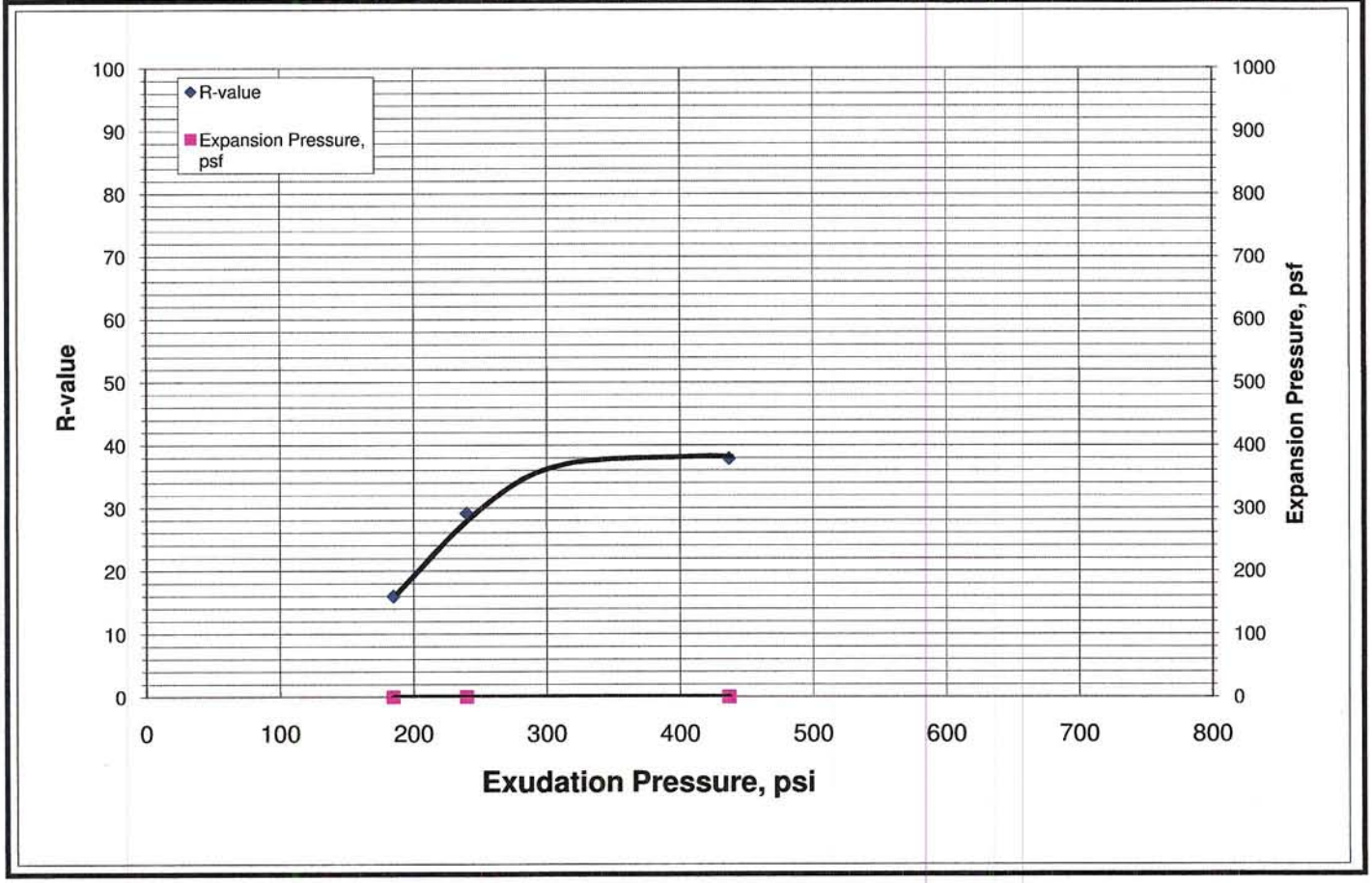

Figure_C5

Corrosivity Test Summary

CTL # 109-662 **Date:** 6/4/2010 **Tested By:** PJ **Checked:** PJ

Client: AMEC Geomatrix **Project:** BART MacArthur Parking **Proj. No:** OD10160260

Remarks:

Sample Location or ID			Resistivity @ 15.5 °C (Ohm-cm)			Chloride	Sulfate-(water soluble)		pH	ORP	Sulfide	Moisture	Soil Visual Description
Boring	Sample, No.	Depth, ft.	As Rec.	Minimum	Saturated	mg/kg	mg/kg	%		(Redox)	Qualitative	%	
						Dry Wt.	Dry Wt.	Dry Wt.		mv	by Lead	At Test	
			ASTM G57	Cal 643	ASTM G57	Cal 422-mod.	Cal 417-mod.	Cal 417-mod.	ASTM G51	SM 2580B	Acetate Paper	ASTM D2216	
B-1	1	3	-	-	1,246	27	<5	<0.0005	6.5	-73	-	22.9	Dark Gray Lean CLAY
B-1	3	9	-	-	1,956	14	<5	<0.0005	7.7	-50	-	26.2	Bluish Gray CLAY
B-2	2	6	-	-	2,163	6	<5	<0.0005	8.0	<-100	-	21.3	Bluish Gray Clayey SAND
B-2	3	9.5	-	-	2,820	<2	<5	<0.0005	8.1	-76	-	19.9	Greenish Brown Clayey SAND w/ Gravel

Figure_C6

ROCKRIDGE GEOTECHNICAL

APPENDIX C

Cone Penetration Test Results

By Geomatrix

GREGG

GEOMATRIX

Site: BART
Location: CPT-01

Engineer: T. WELCH
Date: 10:23:04 05:35

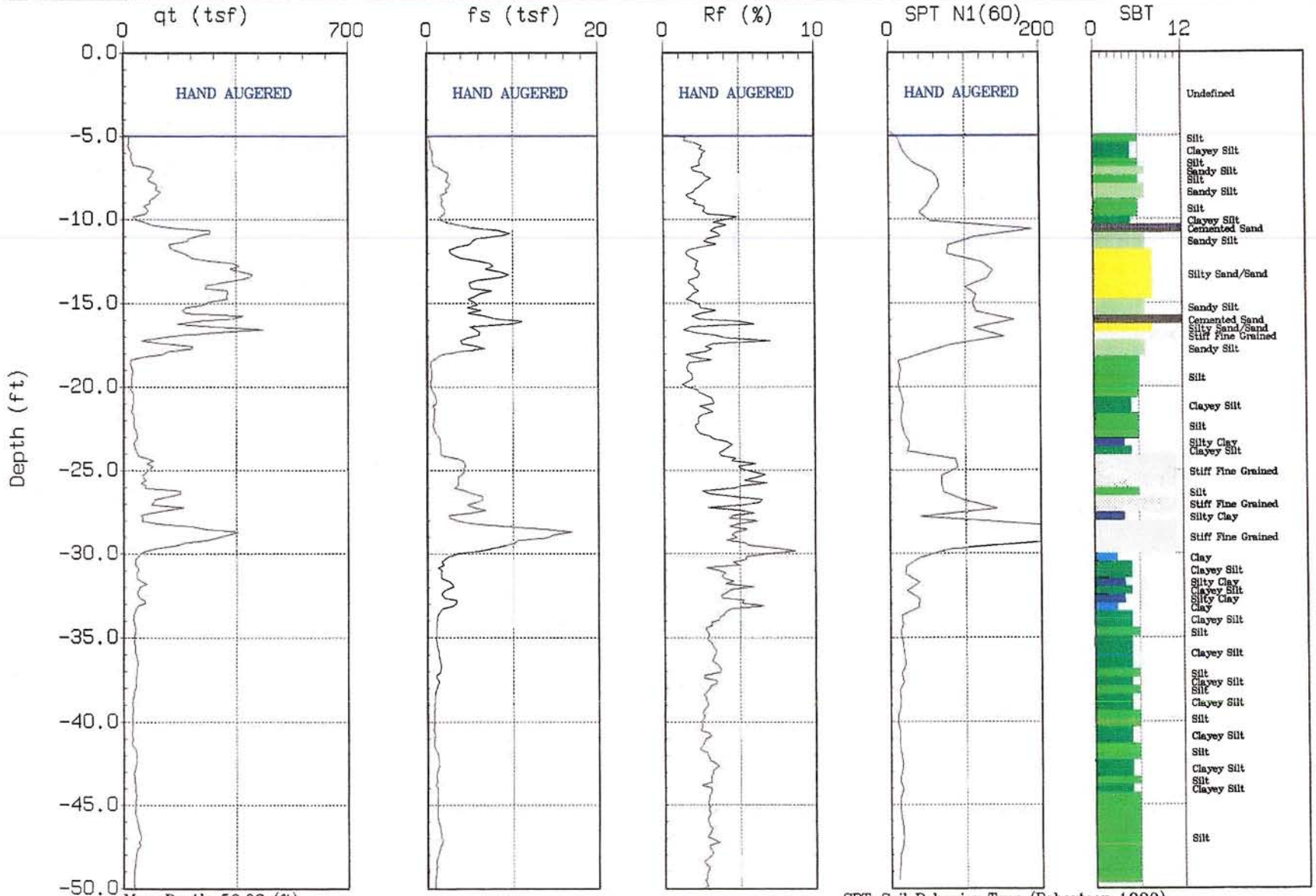

Max. Depth: 50.03 (ft)
Depth Inc.: 0.164 (ft)

SBT: Soil Behavior Type (Robertson 1990)

Figure_D3

GREGG

GEOMATRIX

Site: BART
Location: CPT-02

Engineer: T. WELCH
Date: 10:23:04 07:05

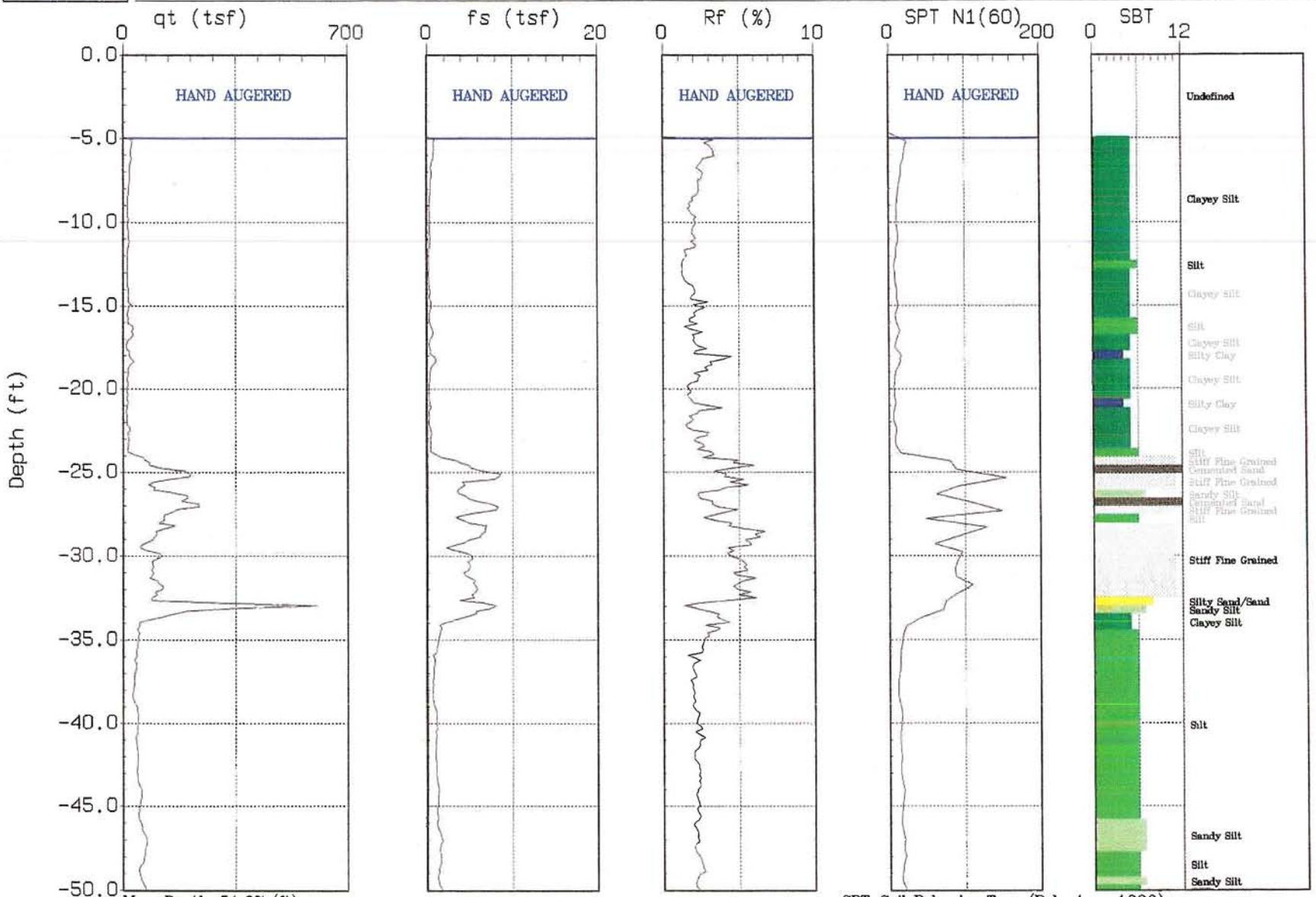

Max. Depth: 51.67 (ft)
Depth Inc.: 0.164 (ft)

SBT: Soil Behavior Type (Robertson 1990)

Figure_D4

GREGG

GEOMATRIX

Site: BART
Location: CPT-03

Engineer: T. WELCH
Date: 10:23:04 09:01

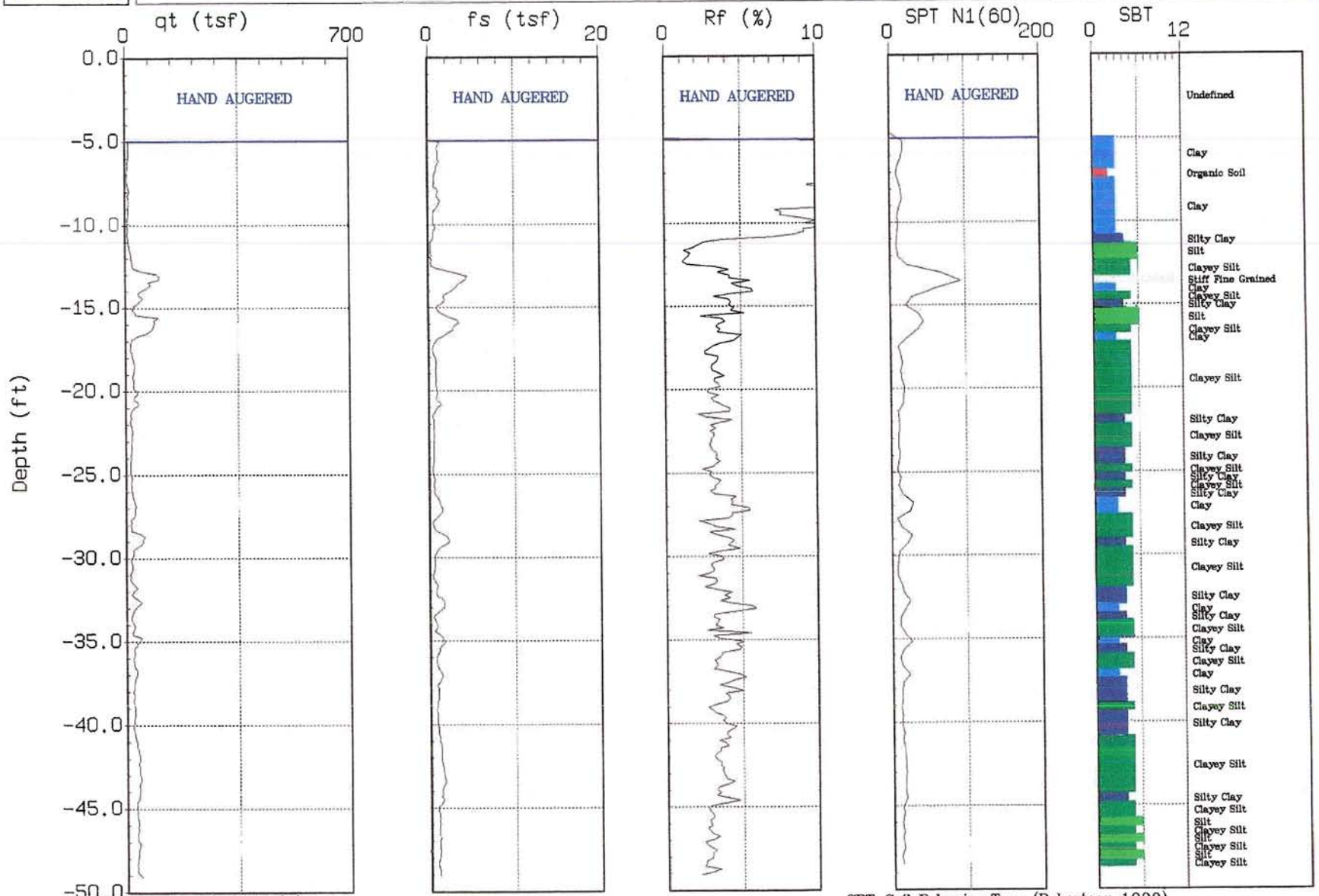

Max. Depth: 49.05 (ft)
Depth Inc.: 0.164 (ft)

SBT: Soil Behavior Type (Robertson 1990)

Figure_D5

GREGG

GEOMATRIX

Site: BART
Location: CPT-04

Engineer: T. WELCH
Date: 10:23:04 09:48

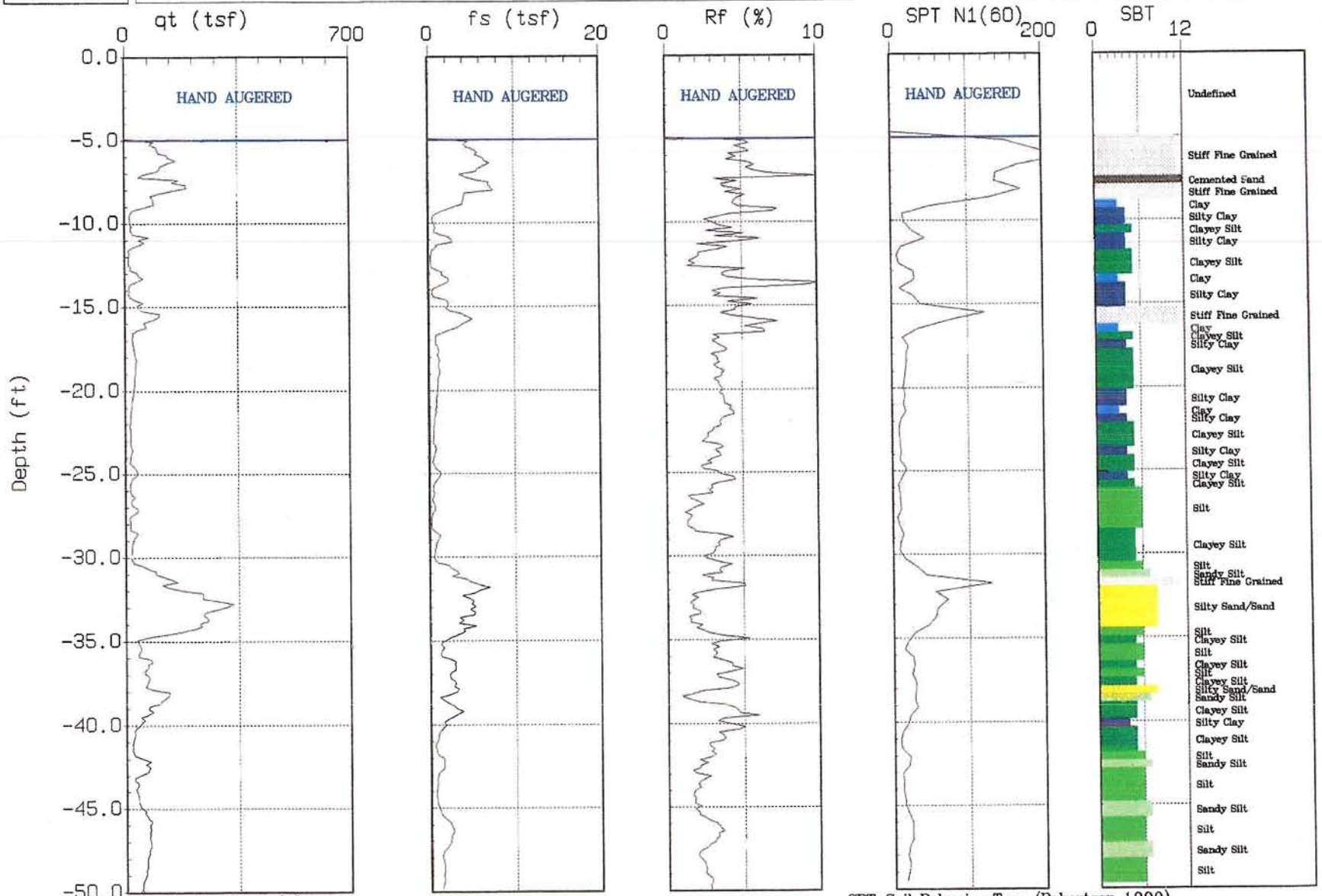

Max. Depth: 50.03 (ft)
Depth Inc.: 0.164 (ft)

SBT: Soil Behavior Type (Robertson 1990)

Figure_D6

GREGG

GEOMATRIX

Site: BART
Location: CPT-05

Engineer: T. WELCH
Date: 10:23:04 10:47

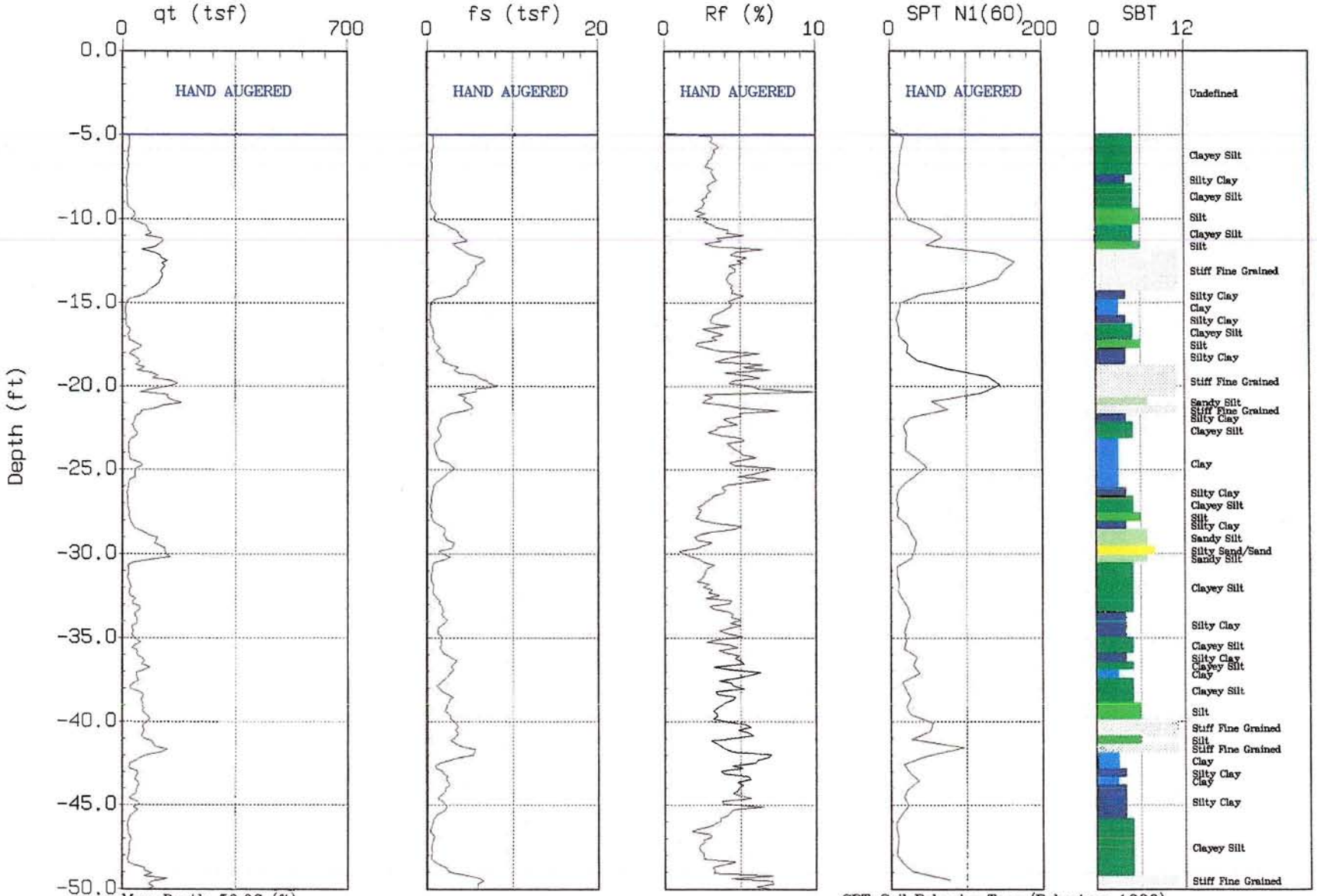

Max. Depth: 50.03 (ft)
Depth Inc.: 0.164 (ft)

SBT: Soil Behavior Type (Robertson 1990)

Figure_D7

GREGG

GEOMATRIX

Site: BART
Location: CPT-06

Engineer: T. WELCH
Date: 10:23:04 11:44

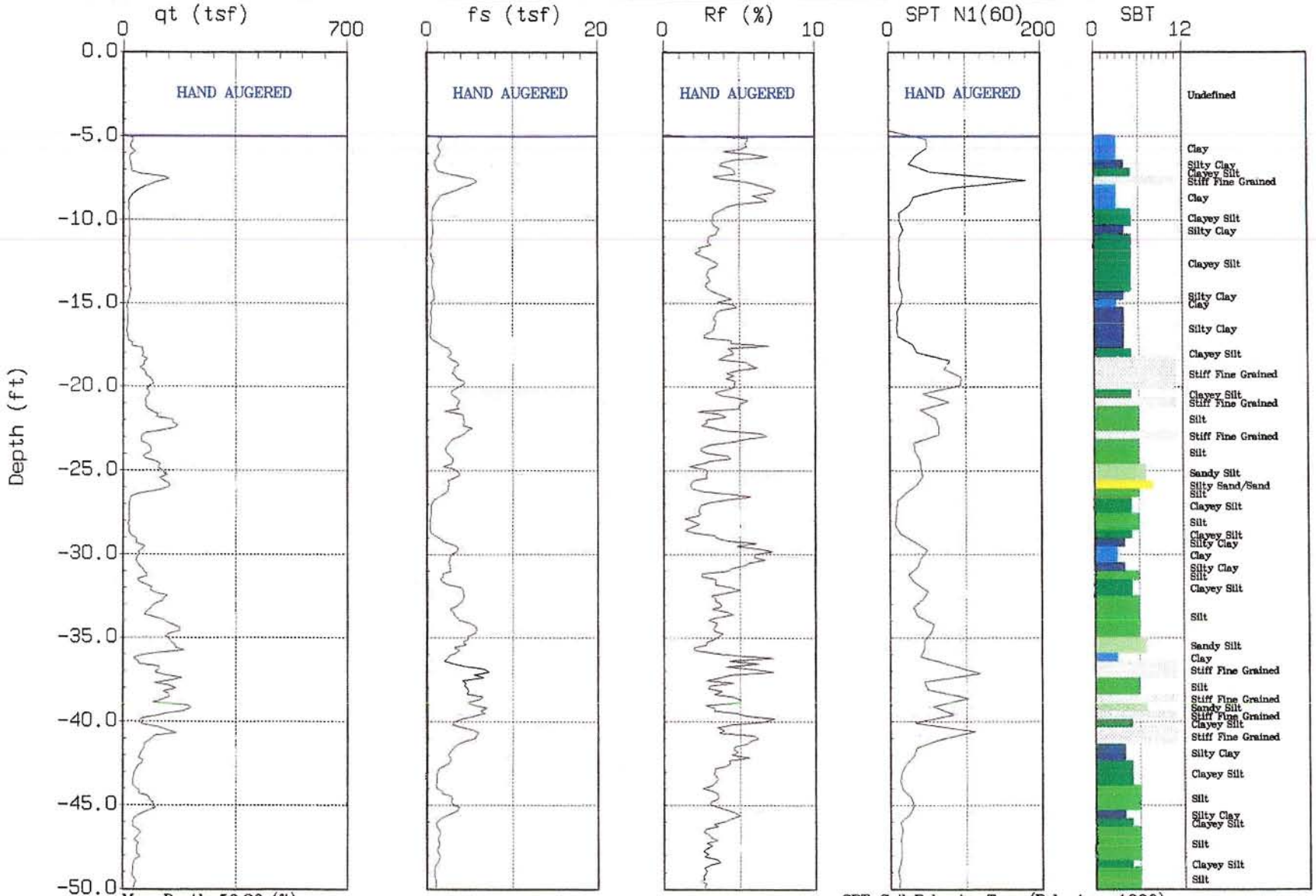

Max. Depth: 50.20 (ft)
Depth Inc.: 0.164 (ft)

SBT: Soil Behavior Type (Robertson 1990)

Figure_D8

ROCKRIDGE GEOTECHNICAL

May 22, 2012
Project No. 11-317

Mr. Art May
MacArthur Transit Community Partners, LLC
345 Spear Street, Suite 700
San Francisco, California 94105

Subject: Geotechnical Consultation
Frontage Road Reconstruction
MacArthur Transit Village
Oakland, California

Dear Mr. May:

This letter presents our geotechnical consultation regarding design and construction of foundations for the proposed improvements to be constructed along the frontage road for the MacArthur BART Transit Village (MTV) project. We previously provided recommendations for the proposed MTV infrastructure improvements in our report dated July 6, 2011. At the time we prepared our report, we were not aware of the proposed improvements along the frontage road and, therefore, our report did not address those improvements.

Plans prepared by PGA Design, dated October 20, 2011, indicate the frontage road (Plaza Way) reconstruction will include construction of light poles, a bus shelter, and a bike station on the west side of Plaza Way. Site grading is expected to consist of minor fills (less than two feet thick).

Subsurface Conditions

As stated in our July 6, 2011 report, the site is generally underlain by heterogeneous alluvial fan and fluvial deposits consisting of moderate to high plasticity clay with varying sand and gravel content, interbedded with discontinuous layers of loose to very dense sand and gravel with varying clay content. The upper clay is generally stiff to very stiff with moisture contents ranging from 20 to 29 percent above the groundwater table and medium stiff to stiff below the groundwater table. Atterberg limits tests performed on the near-surface clay indicate it is highly expansive with plasticity indices (PIs) ranging from 25 to 33.

Groundwater measurements taken during previous investigations indicate a water level gradient across the site, with the high point likely in the northeast corner. The measured

4379 Piedmont Avenue
Oakland, CA 94611

510 420-5738 tel
510 652-3096 fax

groundwater depths during previous investigations ranged from about 7 to 13 feet. The depth to groundwater at the site is expected to fluctuate several feet seasonally.

CONCLUSIONS AND RECOMMENDATIONS

The primary geotechnical concerns for construction of the proposed improvements are: 1) the presence of highly expansive, near-surface soil, 2) the high moisture content of the near-surface soil, and 3) the relatively shallow depth to groundwater. We conclude shallow foundations (i.e., mat and/or footings) are feasible for the proposed improvements provided that measures are taken to reduce the potential for excessive wetting or drying of the near-surface soil during the construction process.

Footing Design

The proposed improvements may be supported on individual and/or continuous footings founded on stiff native soil and/or properly compacted fill, as determined by the Geotechnical Engineer. The footings should be bottomed at least 30 inches below the top of the lowest adjacent *finished* grade. Footings may be designed using an allowable bearing pressure of 2,500 pounds per square foot (psf) for dead plus live loads. This pressure may be increased by one-third for total load conditions. Settlement of new footings is estimated to be less than ½ inch. If poorly compacted fill and/or weak native soil is encountered at the footing excavation bottom, it should be removed to expose suitable bearing material. To protect the footings from drying out during the summer months or softening due to exposure to rain during the winter months, we recommend that three inches of controlled low-strength material (CLSM) with a minimum unconfined compressive strength of 100 pounds per square inch (psi) be placed at the bottom of the footing excavations. The CLSM should be placed within 24 hours after approval of the excavations by the Geotechnical Engineer and prior to placement of reinforcing steel.

Lateral forces can be resisted by a combination of passive pressure against the sides of footings and friction between the bases of the footings and the underlying soil. To compute passive resistance, we recommend using an equivalent fluid weight (triangular distribution) of 250 pounds per cubic foot (pcf). The upper foot of soil should be ignored unless it is confined by pavement or a slab. Frictional resistance should be computed using a friction factor of 0.3. These values include a factor of safety of at least 1.5 and may be used in combination without reduction.

We should check footing excavations prior to placement of reinforcing steel. Excavations should be free of standing water, debris, and loose compressible materials prior to concrete placement. The bottoms and sides of the footing excavations should be kept in a moist condition (i.e., no shrinkage cracks) until CLSM is placed.

Mat Foundations

Mat foundations may be used in lieu of or in combination with footings for support of the proposed improvements. Mat foundations should be embedded at least four inches below the lowest adjacent soil subgrade and should be underlain by at least eight inches of Class 2 aggregate base (AB) compacted to at least 90 percent relative compaction. Where the mat foundation is adjacent to landscaped areas, the edge of the mat should be deepened to extend three inches below the bottom of the AB. Prior to placement of the AB, the soil subgrade at the base of the mat foundation excavation should be scarified and compacted in accordance with the recommendations in our July 6, 2011 report.

For design of the mat, we recommend using a modulus of vertical subgrade reaction of 50 pounds per cubic inch (pci) and allowable bearing pressures of 1,500 and 2,000 pounds per square foot (psf) for dead-plus-live loads and total loads, respectively. Localized higher bearing pressures may be acceptable; however, this should be reviewed on a case-by-case basis.

Lateral forces can be resisted by a combination of passive pressure against the face of the mat and friction between the base of the mat and the underlying soil. To compute passive resistance, we recommend using an equivalent fluid weight of 250 pcf. The upper foot of soil should be ignored unless it is confined by pavement or a slab. Frictional resistance should be computed using a friction factor of 0.45. These values include a factor of safety of at least 1.5 and may be used in combination without reduction.

We trust this letter provides the requested information. If you have any questions, please call.

Sincerely yours,
ROCKRIDGE GEOTECHNICAL, INC.

REGISTERED PROFESSIONAL ENGINEER
CRAIG S. SHIELDS
GE2116
3/31/13
GEOTECHNICAL
STATE OF CALIFORNIA

Craig S. Shields, P.E., G.E.
Principal Geotechnical Engineer

cc: Mr. Christopher Kent, PGA Design

ROCKRIDGE
GEOTECHNICAL

January 22, 2013
Project No. 11-317

Mr. Art May
MacArthur Transit Community Partners, LLC
345 Spear Street, Suite 700
San Francisco, California 94105

Subject: Geotechnical Consultation Regarding Foundation System
Proposed Bike Station
MacArthur Transit Village
Oakland, California

Dear Mr. May:

This letter presents the results of our geotechnical consultation regarding the mat foundation that will support the proposed bike station to be constructed as part of the frontage road improvements for the MacArthur Transit Village (MTV) project. We previously provided recommendations for design of a mat foundation for the bike station in our letter dated May 22, 2012. Our consultation is based on our review of the following documents:

1. Structural plans for the bike station prepared by Smith Engineering, dated July 13, 2012.
2. Comments from Thornton & Tomasetti from their review of the structural plans for the bike station.
3. Column loads for the bike station provided by Tracie Bockhorst with Smith Engineering via email on November 7, 2012.
4. Foundation plans provided by Caltrans for the 40th Street Undercrossing.

The bike station will be constructed adjacent to an existing pile-supported Caltrans retaining wall. The proposed mat foundation for the bike station will extend a few feet over the pile cap for the retaining wall. In addition, the mat foundation will be constructed around an isolated, pile-supported overpass column. The foundation plans prepared by Smith Engineering call for the bike station to be supported on a mat foundation that will typically be 8 inches thick with a 3-inch-thick topping slab. The mat will be 20 inches thick at column locations. The mat will be 12 inches thick where it extends over the foundation for the existing retaining wall and overpass column. A one-

4379 Piedmont Avenue
Oakland, CA 94611

510 420-5738 tel
510 652-3096 fax

inch-thick "void form" will be placed below the mat where it extends over the retaining wall foundation.

According to the column load information provided by Smith Engineering, the loads imposed on the mat foundation will range from 2.0 kips at the corner of the mat to 19.2 kips near the center of the mat where the design live load is higher. The average pressure exerted by the mat foundation on the underlying soil is about 60 psf, although the pressure will be higher near the center of the mat. Since the mat foundation will be slightly heavier than the existing pavement section, the average imposed pressure will be up to about 90 psf, which is less than the weight of one foot of soil. This pressure will result in less than approximately 1/16 inch of elastic deformation of the soil. This deformation will occur immediately upon loading and will have a negligible (i.e., not discernible) impact on the existing pile-supported retaining wall and overpass column.

We trust this letter provides the requested information. If you have any questions, please call.

Sincerely yours,
ROCKRIDGE GEOTECHNICAL, INC.

REGISTERED PROFESSIONAL ENGINEER
CRAIG S. SHIELDS
GE2116
3/31/13
GEOTECHNICAL
STATE OF CALIFORNIA

Craig S. Shields, P.E., G.E.
Principal Geotechnical Engineer

cc: Mr. Christopher Kent, PGA Design

ROCKRIDGE GEOTECHNICAL

September 16, 2013
Project No. 11-317

Mr. Art May
MacArthur Transit Community Partners, LLC
345 Spear Street, Suite 700
San Francisco, California 94105

Subject: Geotechnical Consultation
Frontage Road Subgrade
MacArthur Transit Village
Oakland, California

Dear Mr. May:

This letter presents our recommendations regarding the reuse of native soil as fill for Frontage Road subgrade at the MacArthur BART Transit Village (MTV) project site. The native soil is being generated from utility and joint trench excavations along the Frontage Road. The excavated soil consists of predominately native moderate to high plasticity clay with varying sand and gravel content.

We previously provided recommendations for the proposed MTV infrastructure improvements in our report dated July 6, 2011. Plans prepared by Sandis, the project civil engineer, dated July 6, 2012, indicate the Frontage Road reconstruction will include asphalt and/or concrete pavements. Site grading along Frontage Road is expected to consist of minor fills (less than two feet thick).

New pavements for the Frontage Road were designed assuming the soil exposed at pavement subgrade elevation is similar to the subgrade soil beneath the existing pavement. Asphalt pavement sections were designed using a resistance value (R-value) of 10 based on laboratory test results of near surface clayey soil obtained from the site during previous site investigations.

We conclude that the soil generated from utility and joint trench excavations along the Frontage Road may be reused as fill for the soil subgrade of the new Frontage Road. We recommend the excavated material, consisting of predominately clay with varying amounts of sand and gravel, be moisture conditioned to at least four percent above optimum moisture content, and compacted to between 88 and 93 percent relative compaction. The upper six inches of the soil subgrade should be moisture conditioned to above optimum moisture content and compacted to at least 95 percent relative

compaction per City of Oakland specifications. The soil subgrade should be firm and non-yielding prior to placement of aggregate base.

We trust this letter provides the requested information. If you have any questions, please call.

Sincerely yours,
ROCKRIDGE GEOTECHNICAL, INC.

REGISTERED PROFESSIONAL ENGINEER
HUI JUN LIANG
GE2663
Exp. 6/30/2014
GEOTECHNICAL
STATE OF CALIFORNIA

REGISTERED PROFESSIONAL ENGINEER
CRAIG S. SHIELDS
GE2116
3/31/15
GEOTECHNICAL
STATE OF CALIFORNIA

Linda H. J. Liang, P.E., G.E.
Senior Engineer

Craig S. Shields, P.E., G.E.
Principal Geotechnical Engineer

cc: Mr. Joe McCarthy – MacArthur Transit Community Partners, LLC
Mr. Henry Phillips - Sandis

EXHIBIT U

BART Facilities Standards

BART Facilities Standard Specification for construction can be accessed through the following website:

http://www.bart.gov/about/business/specifications
https://webapps.bart.gov/BFS/bfs_spec.html